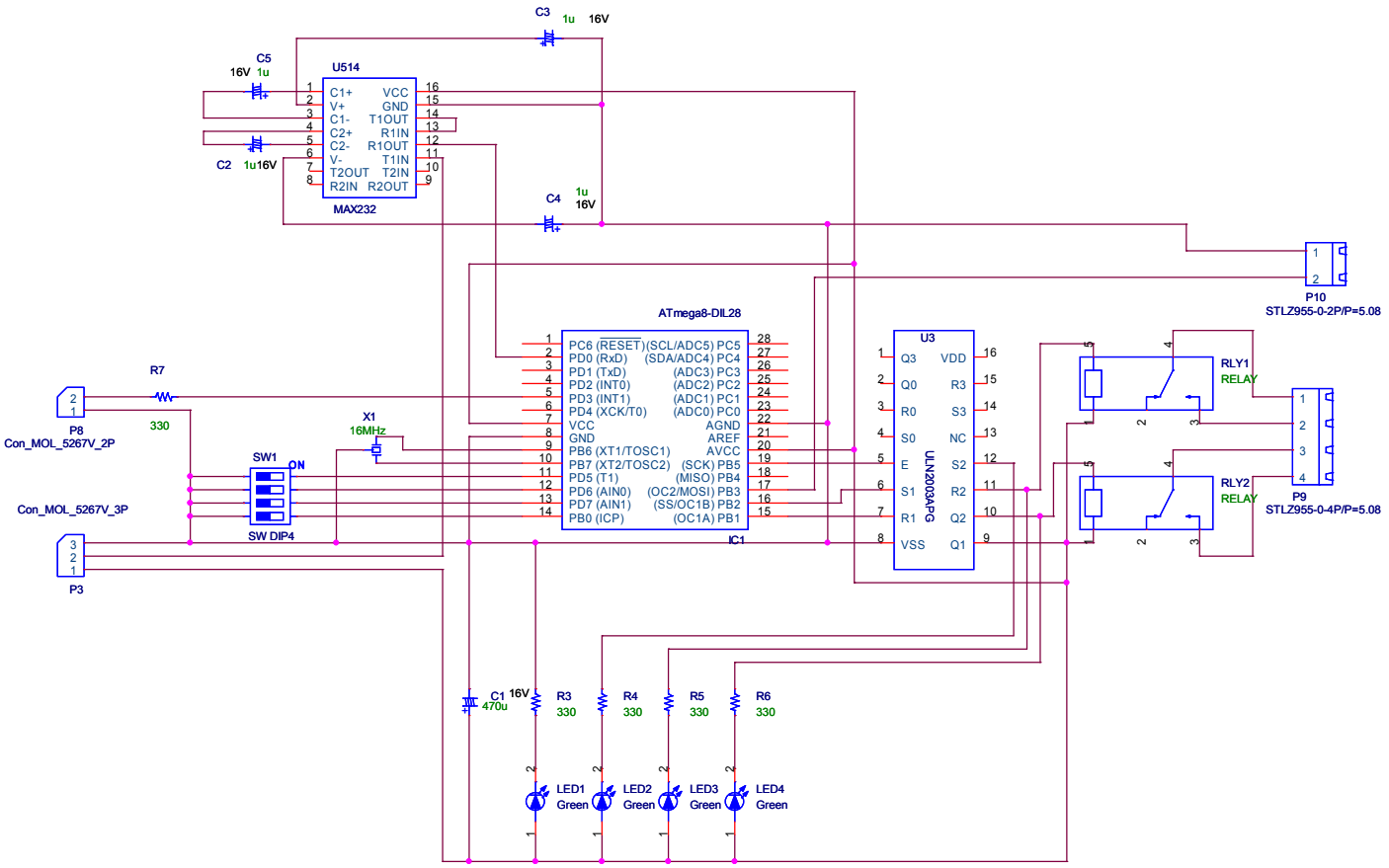

Size	Document Number	Rev
A4	KT-Control	1.0
Date: Monday, March 23, 2020	Sheet 1 of 1	