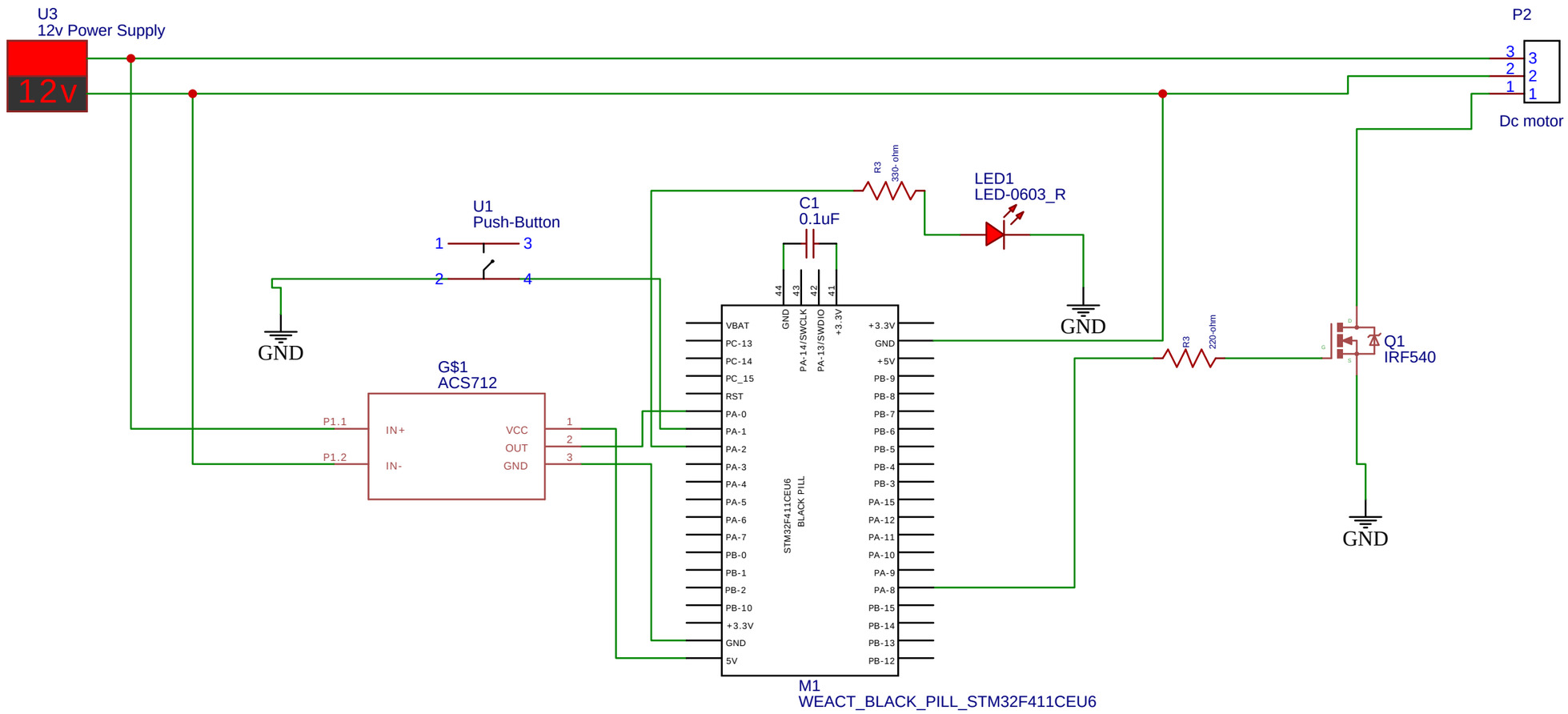

TITLE: DC Motor Control System Design		REV: 1.0
EasyEDA	Company: Nephat G. G.	Sheet: 1/1
	Date: 2025-02-08 Drawn By: nephatgg	