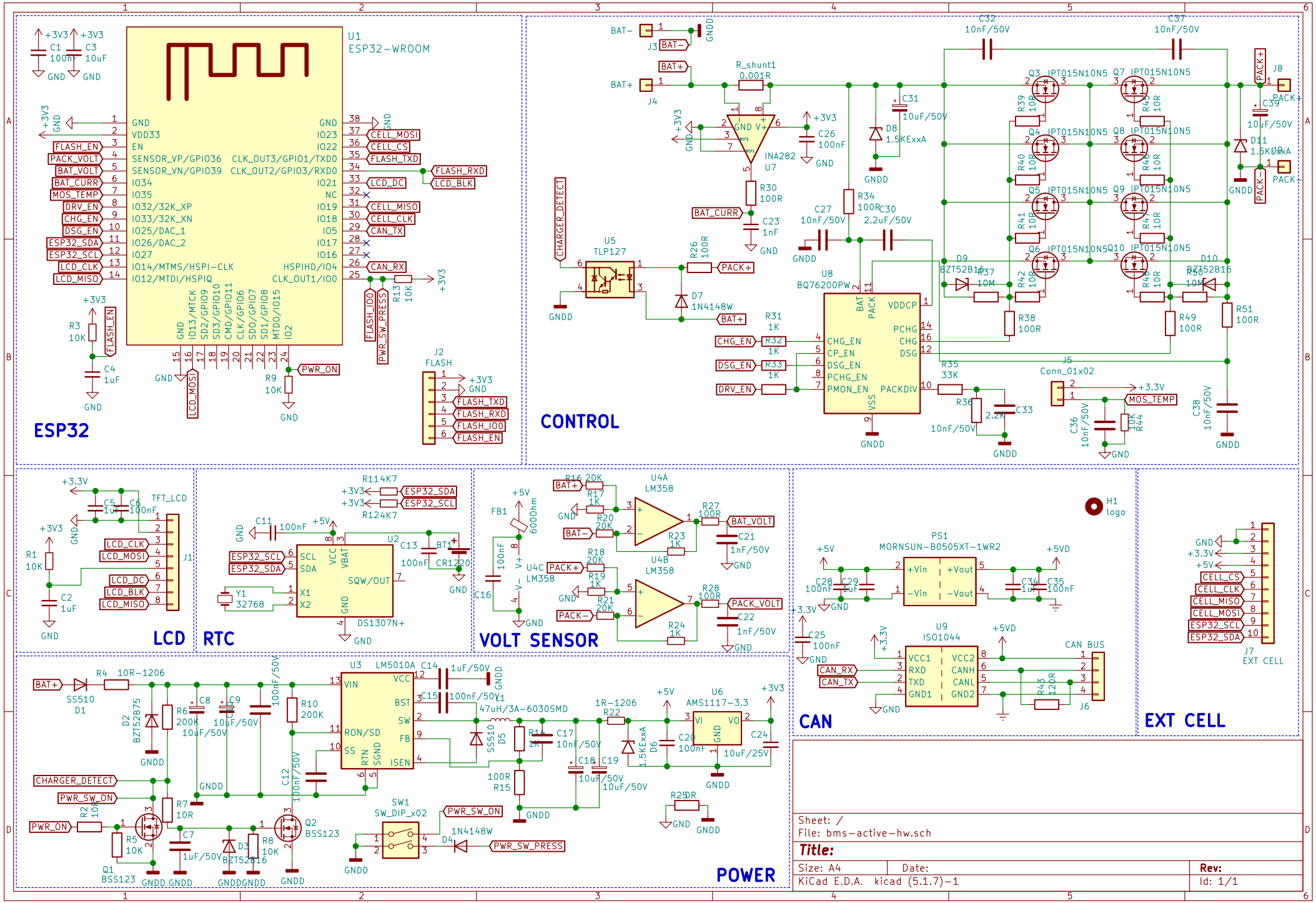
ESP32
U1
ESP32-WROOM
CONTROL
U5
TLP127
U8
BQ76200PW
INA282
U7
R_shunt1
0.001R
J2
FLASH
J5
Conn_01x02
LCD
TFT_LCD
J1
RTC
U2
DS1307N+
VOLT SENSOR
U4A
LM358
U4B
LM358
U4C
LM358
POWER
U3
LM5010A
U6
AMS1117-3.3
SW1
SW_DIP_x02
CAN
PS1
MORNSUN-B0505XT-1WR2
U9
ISO1044
CAN BUS
J6
EXT CELL
J7
H1
logo
Sheet: /
File: bms-active-hw.sch
Title:
Size: A4
Date:
Rev:
KiCad E.D.A. kicad (5.1.7)-1
Id: 1/1