Penn Engineering
University of Pennsylvania

Mechanically Enabling Grease Characterization in Ball-on Disk Tribometers

Nathan Hryniewicz

Summer 2025

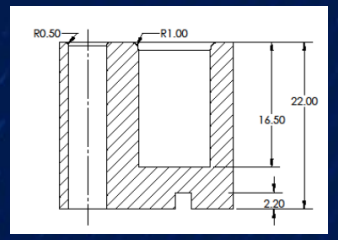

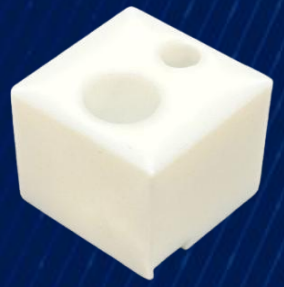

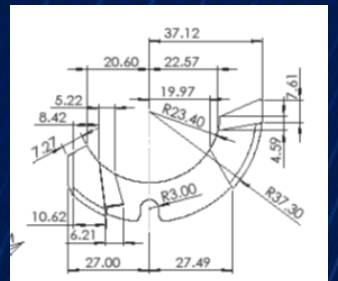

Motivation: Energy Efficiency

- 80 to 90% of rolling element bearings are grease lubricated[1]
- Despite this, fundamental lubricating mechanisms are not as well understood as oil-based lubrication.
- **Grease tribology lacks standard test methods— ball-on-disk results are prominent but often inconsistent.**

[1]Lugt (2012)

Why are results unreliable?

Issues:

- Lid must be removed to ensure no starvation
- Limited speed range due to no lid
- Majority of grease accumulates outside of track–possible starvation
- Grease climbs up shaft and into instrument

Solution: Final Setup

Modifications/Fixtures:

- Custom machined lid with window
  - Enables high speeds
  - Enables high temps
  - Enables solvent cleaning
- Custom manufactured grease scoops
  - Maintains **repeatable** fully flooded conditions
  - Limits amount of grease needed

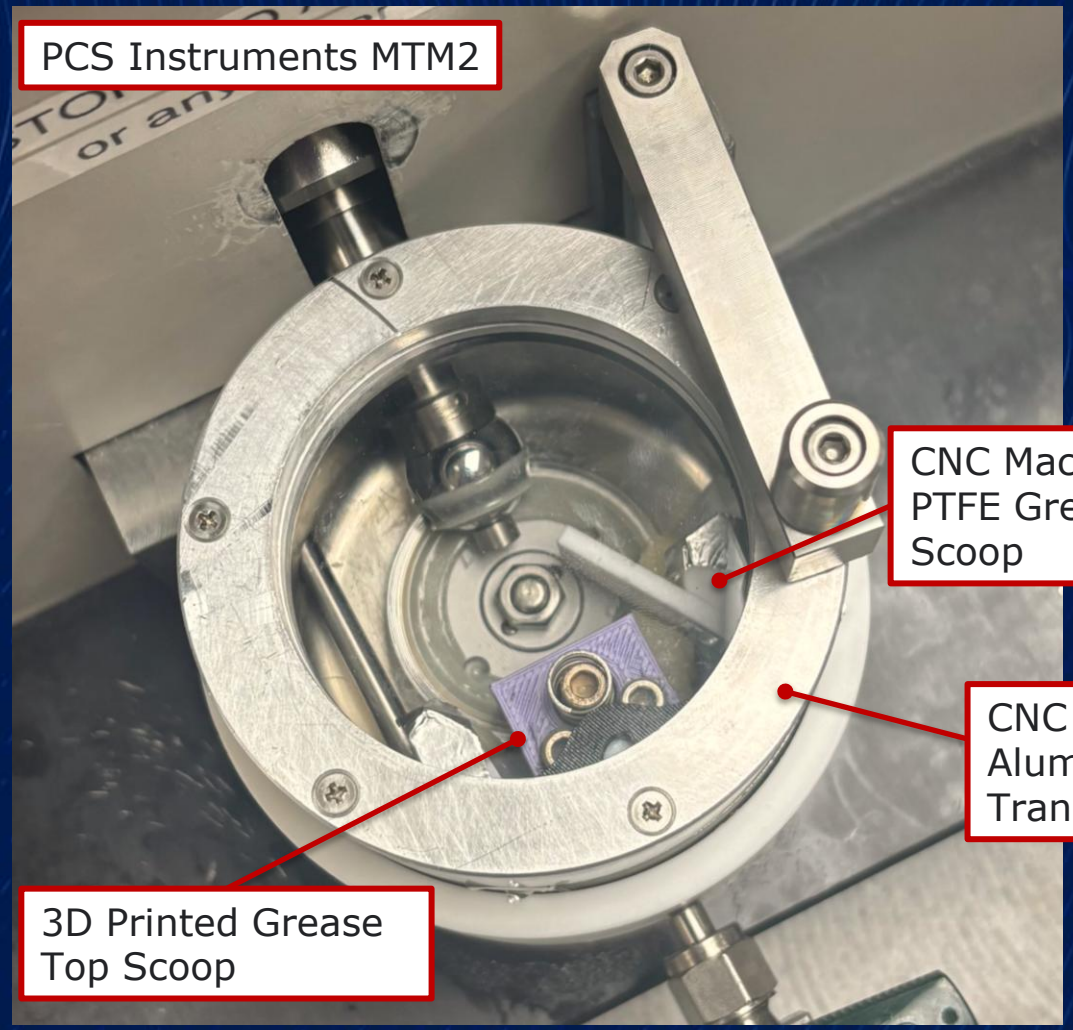

Setup Validation

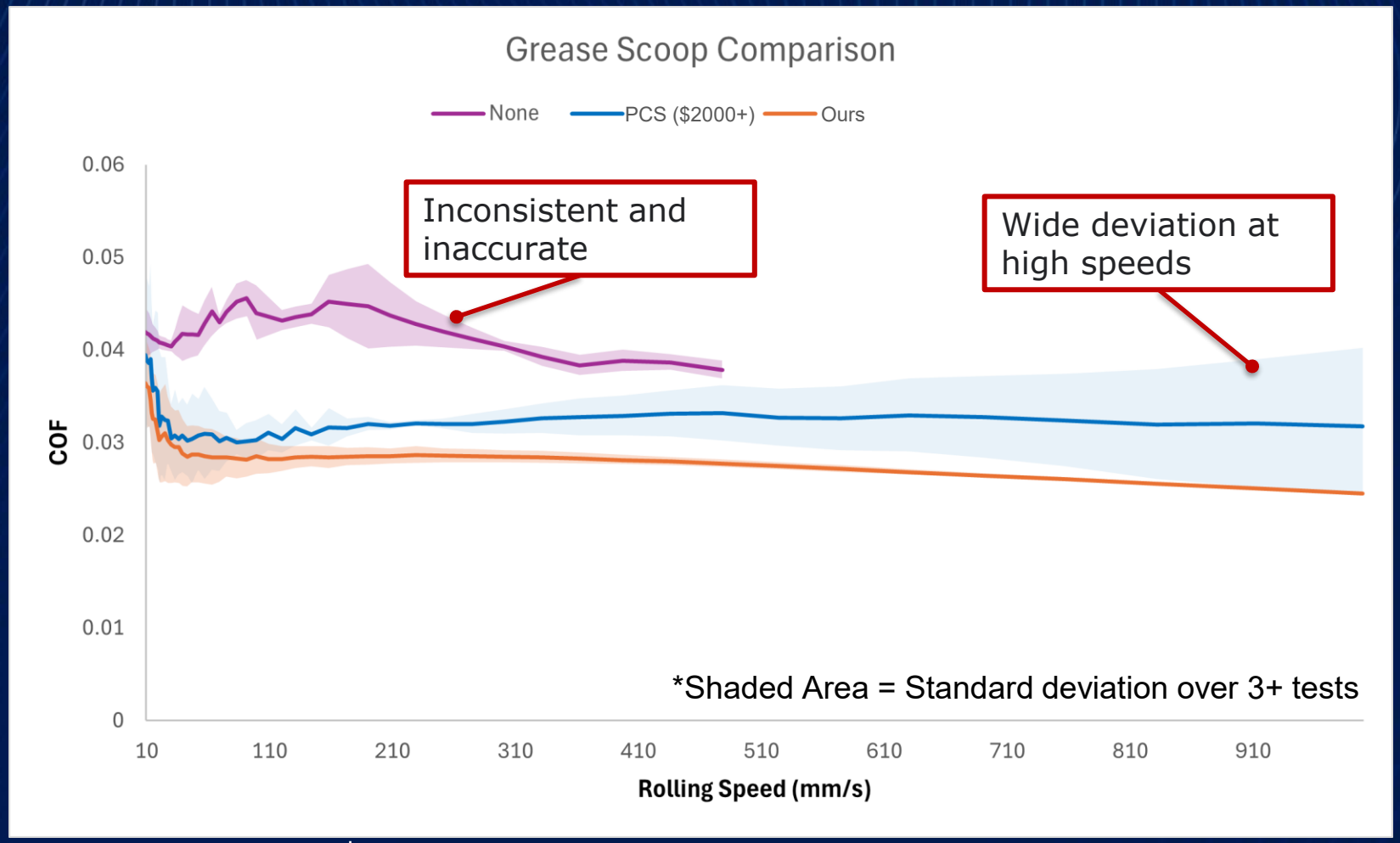

- Results match experimental stribeck curve shape
- Achieved near perfect repeatability
- **Outperformed** expensive commercial solution
- **Enabled reliable grease testing in a ball-on-disk tribometer**

Penn Engineering
University of Pennsylvania

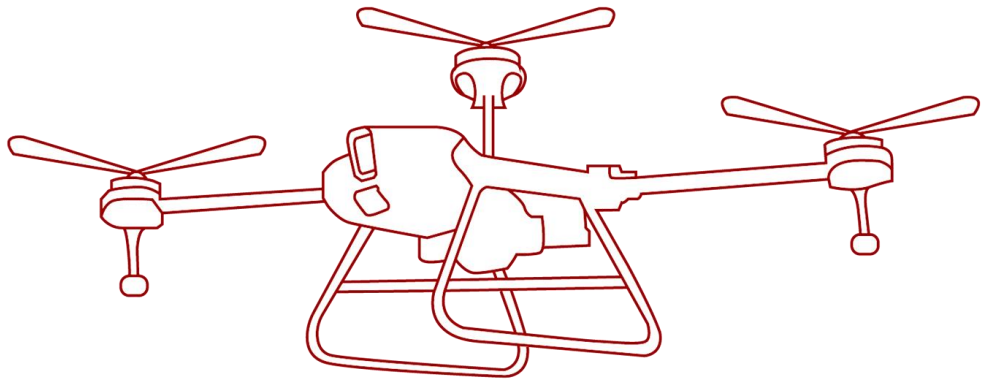

How It Was Designed

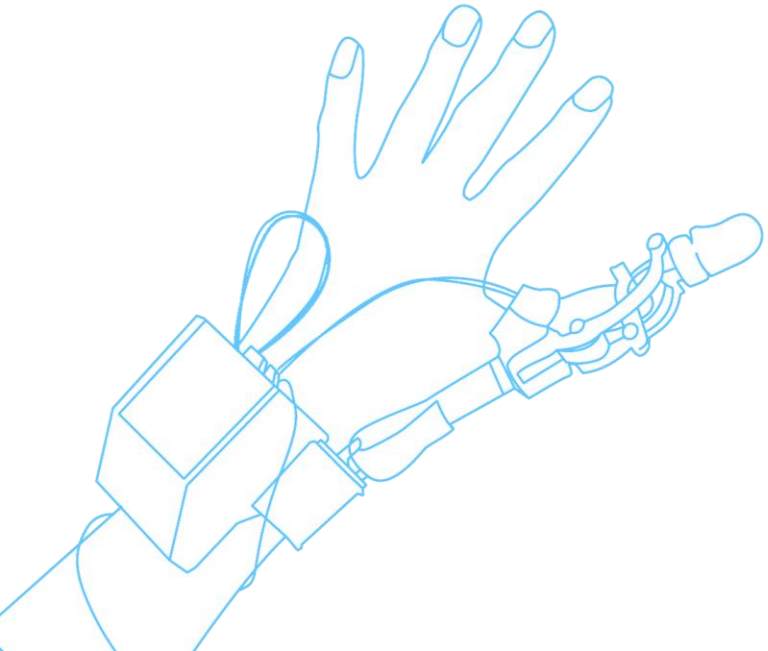

Clear Lid

V1 (3D-Printed PLA, Laser cut acrylic)

V2 (3D-Printed ABS, Laser cut acrylic)

V3 (Machined Aluminum, Glass)

O-Ring

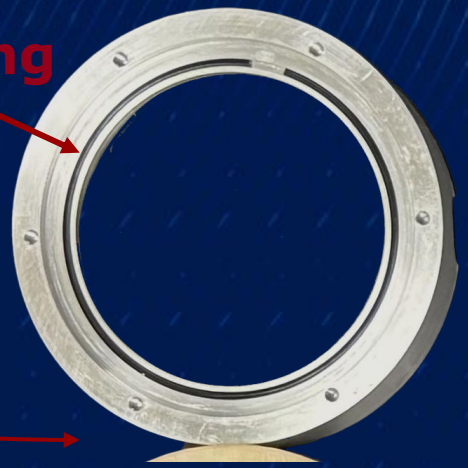

Base

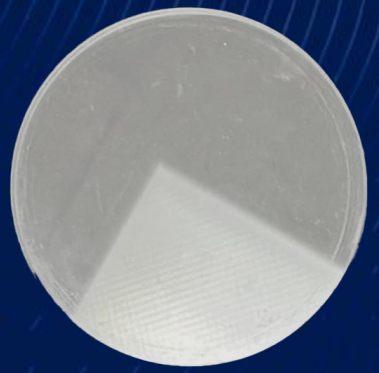

Glass

Machine Screws

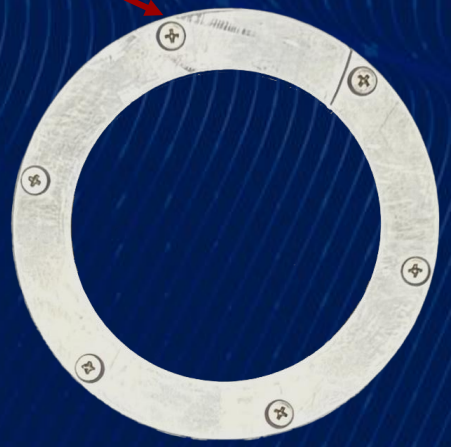

Top

Grease Scoops

V1 (3D-Printed PLA) **V2 (Machined PTFE)**

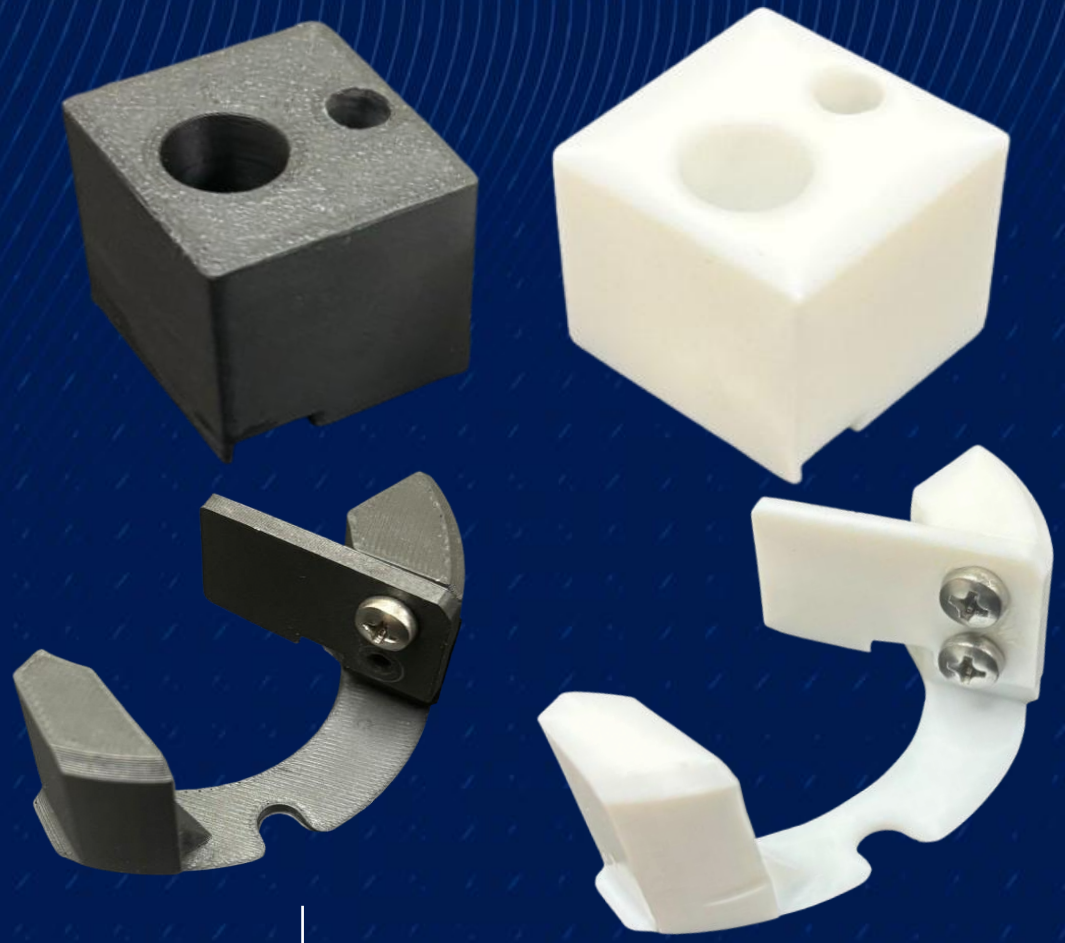

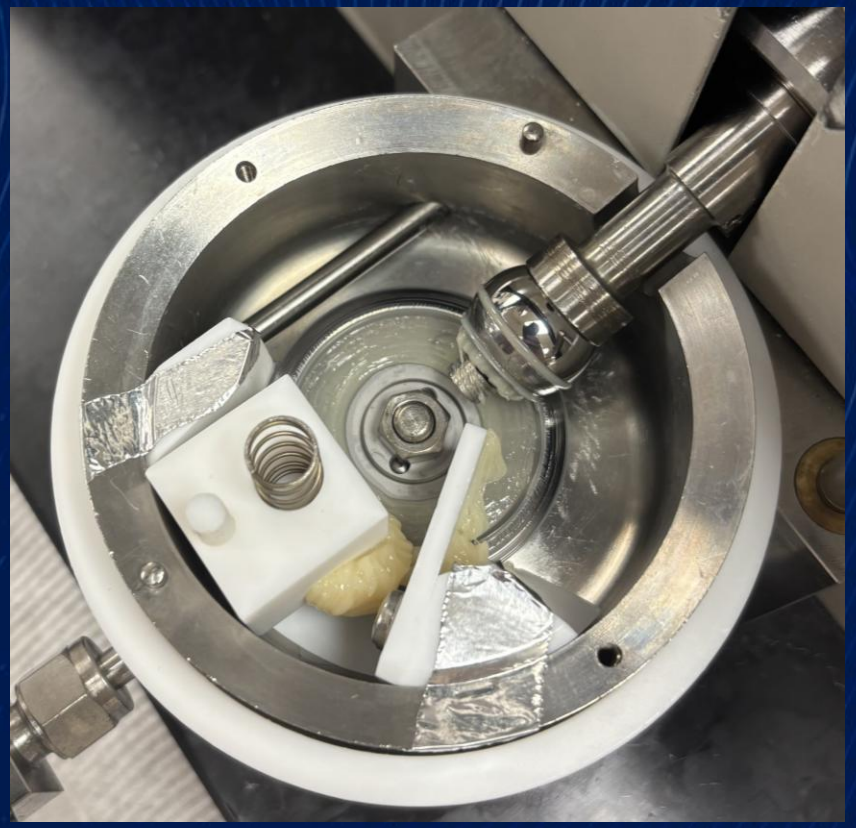

Credit to Rory MacAllister, Imperial College London for inspiration and reference

Drawings ↪

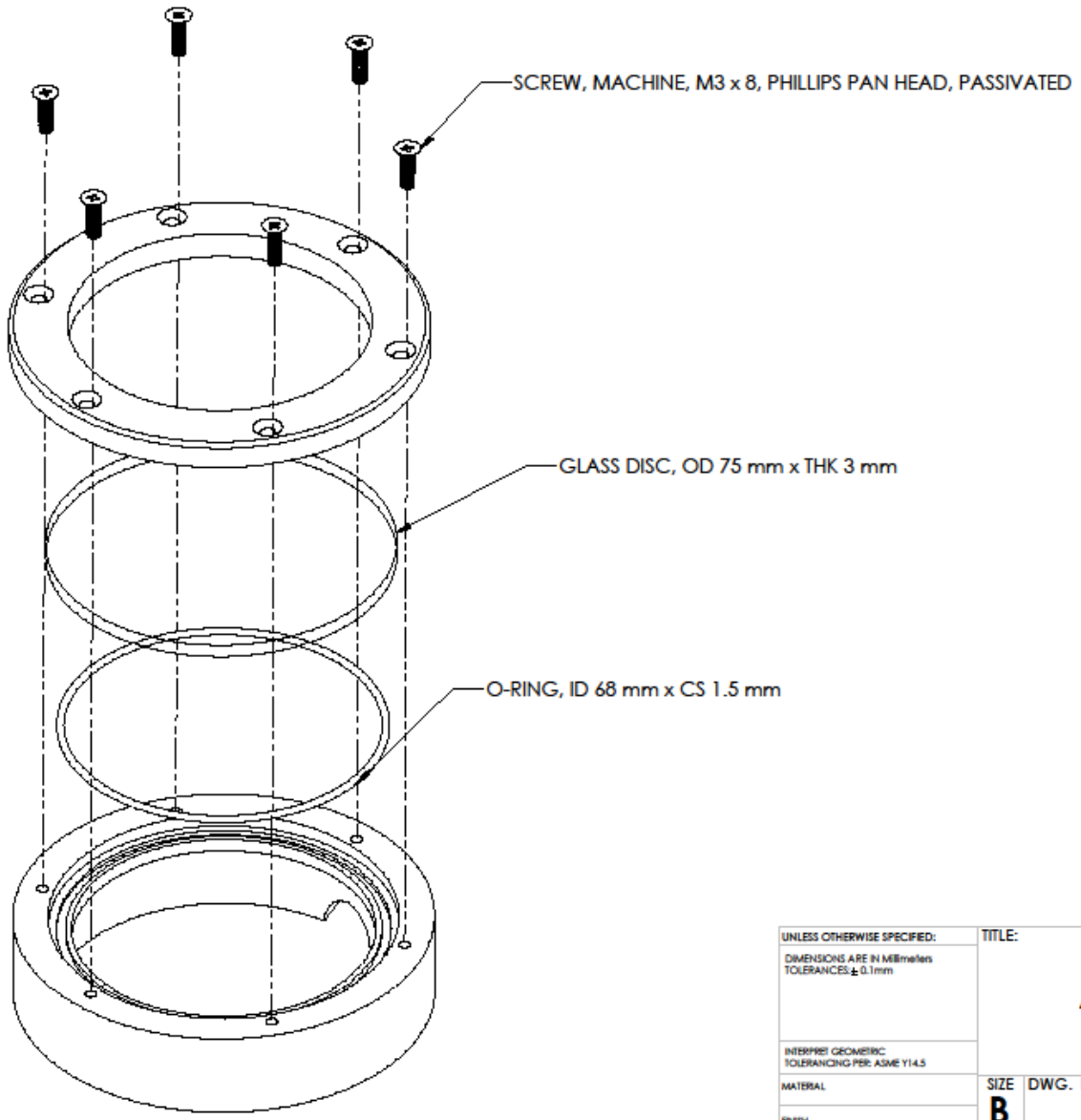

UNLESS OTHERWISE SPECIFIED: DIMENSIONS ARE IN Millimeters TOLERANCES: ± 0.1mm	TITLE: Assembly
INTERPRET GEOMETRIC TOLERANCING PER: ASME Y14.5	
MATERIAL	SIZE B / DWG. NO. / REV
FINISH	
DO NOT SCALE DRAWING	SCALE: 1:1 / WEIGHT: / SHEET 1 OF 1

SOLIDWORKS Educational Product. For Instructional Use Only.

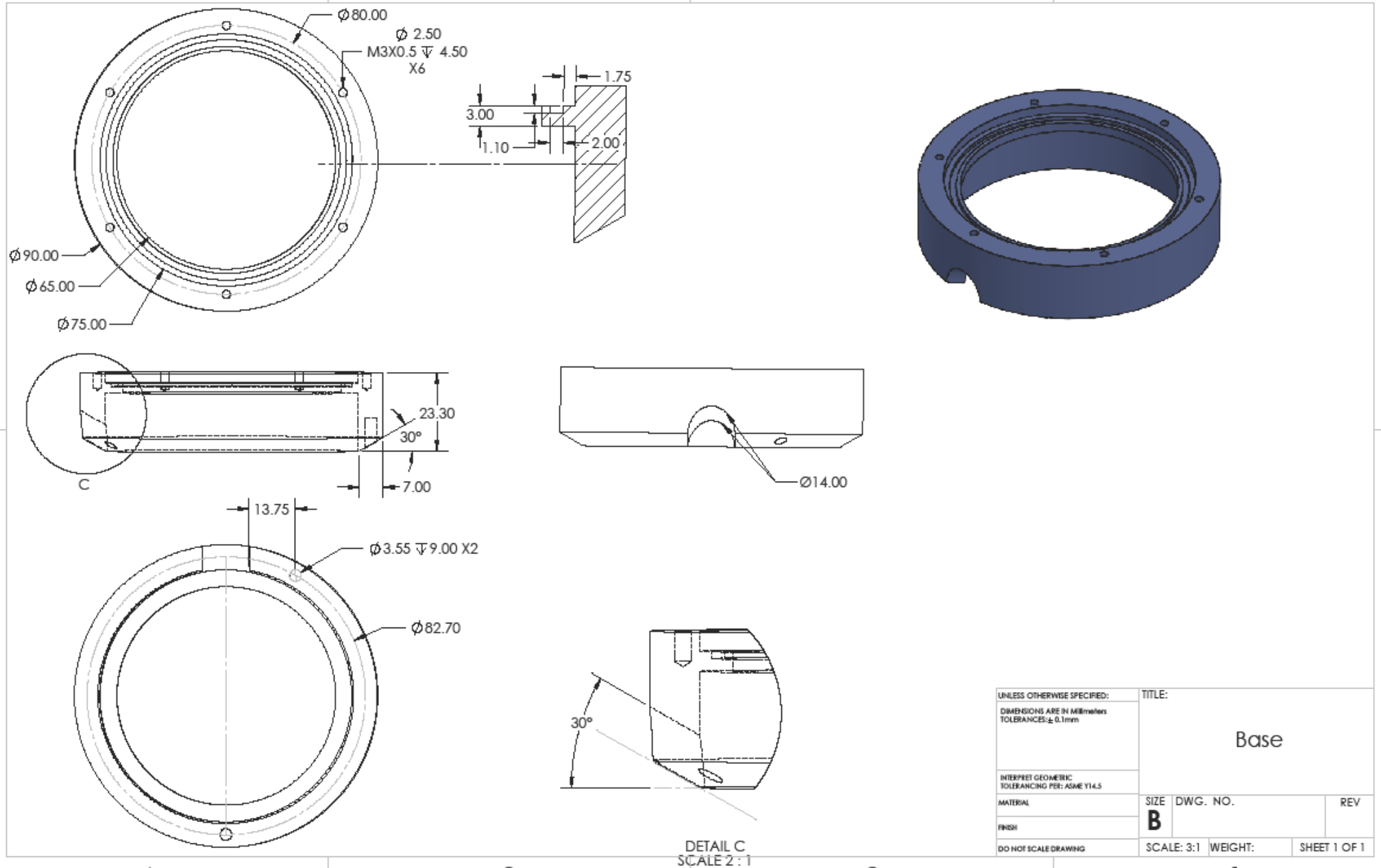

SOLIDWORKS Educational Product. For Instructional Use Only.

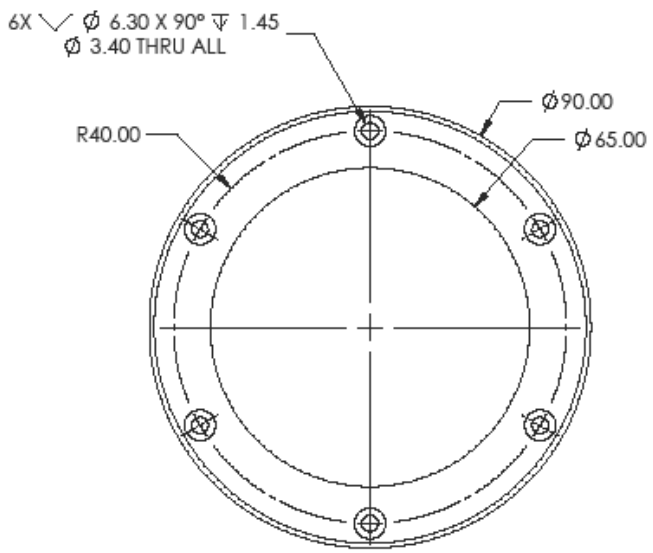

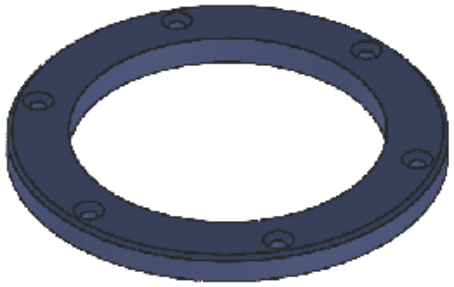

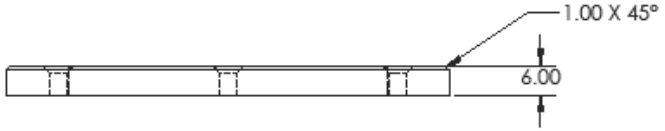

UNLESS OTHERWISE SPECIFIED: DIMENSIONS ARE IN Millimeters TOLERANCES:± 0.1mm	TITLE: Top		
INTERPRET GEOMETRIC TOLERANCING PER: ASME Y14.5			
MATERIAL	SIZE B	DWG. NO.	REV
FINISH			
DO NOT SCALE DRAWING	SCALE: 1:1	WEIGHT:	SHEET 1 OF 1

SOLIDWORKS Educational Product. For Instructional Use Only.

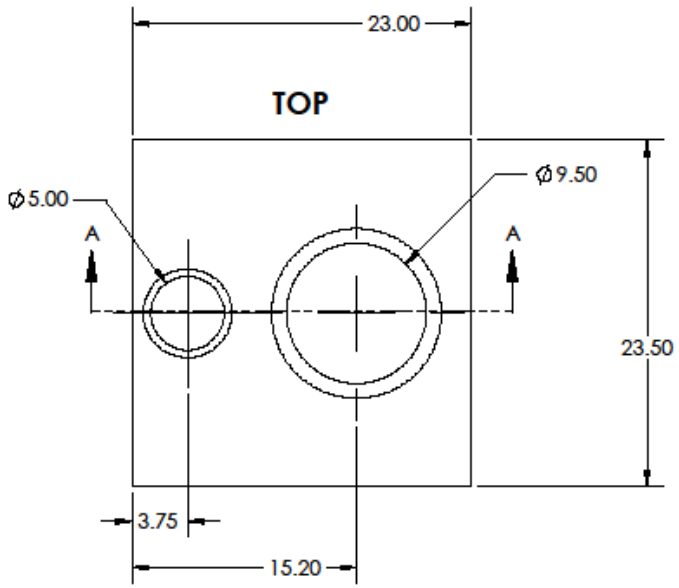

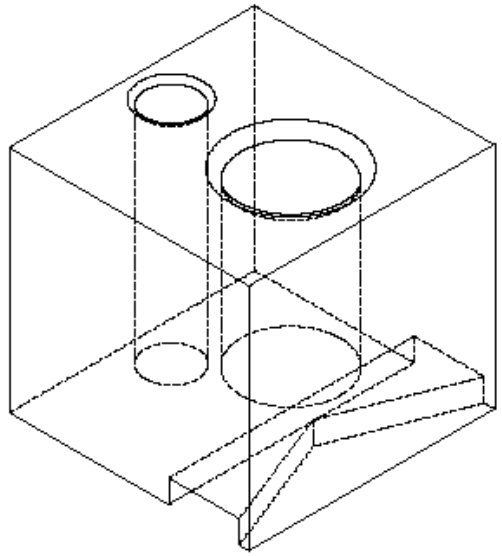

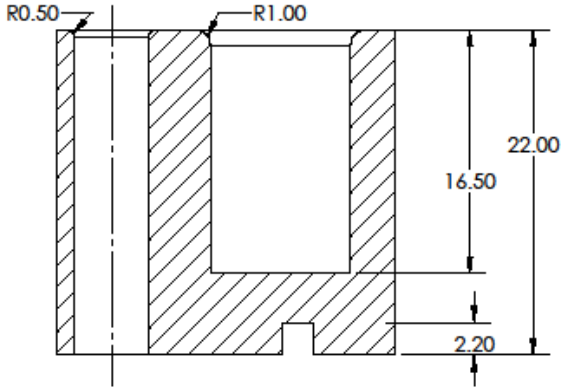

SECTION A-A
SCALE 3 : 1

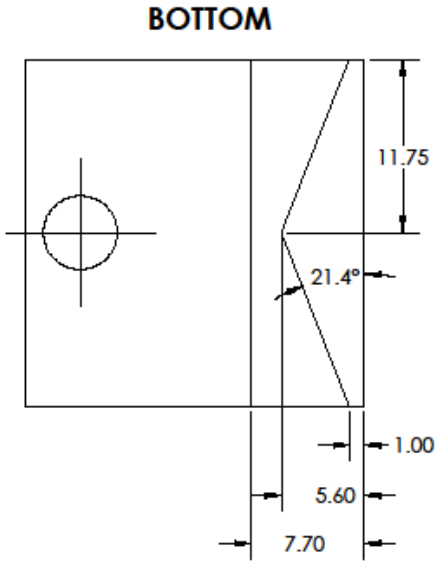

UNLESS OTHERWISE SPECIFIED: DIMENSIONS ARE IN Millimeters TOLERANCES ± 0.1mm	TITLE: Grease Scoop		
INTERPRET GEOMETRIC TOLERANCING PER: ASME Y14.5			
MATERIAL	SIZE B	DWG. NO.	REV
FINISH			
DO NOT SCALE DRAWING	SCALE: 3:1	WEIGHT:	SHEET 1 OF 1

SOLIDWORKS Educational Product. For Instructional Use Only.

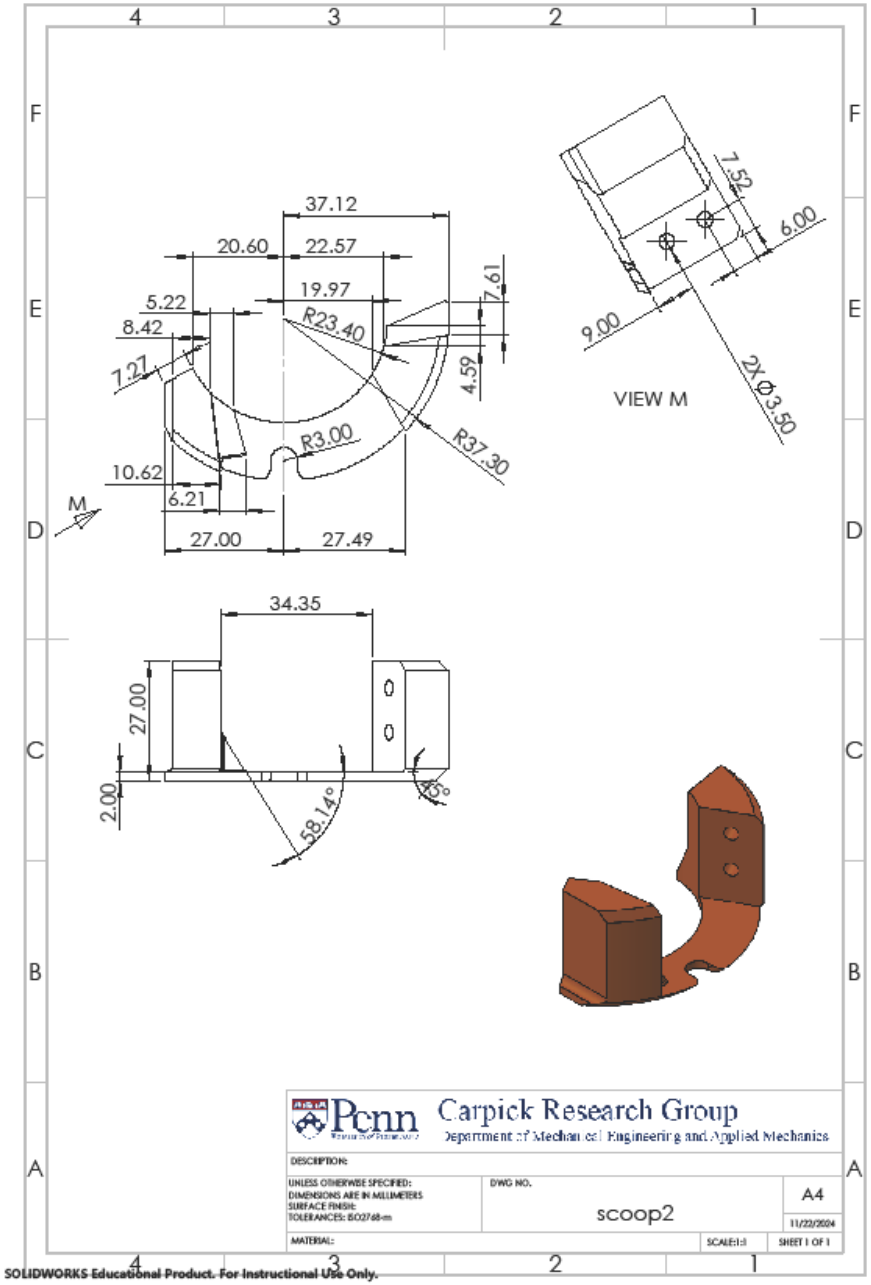
37.12
20.60
22.57
19.97
5.22
8.42
7.21
R23.40
7.61
4.59
R3.00
R37.30
10.62
6.21
M
27.00
27.49
7.52
6.00
9.00
2X Ø3.50
VIEW M
34.35
27.00
2.00
58.14°
45°
Penn
Carpick Research Group
Department of Mechanical Engineering and Applied Mechanics
DESCRIPTION:
UNLESS OTHERWISE SPECIFIED:
DIMENSIONS ARE IN MILLIMETERS
SURFACE FINISH:
TOLERANCES: ISO2768-m
DWG NO.
scoop2
A4
11/22/2024
MATERIAL:
SCALE:1:1
SHEET 1 OF 1
SOLIDWORKS Educational Product. For Instructional Use Only.

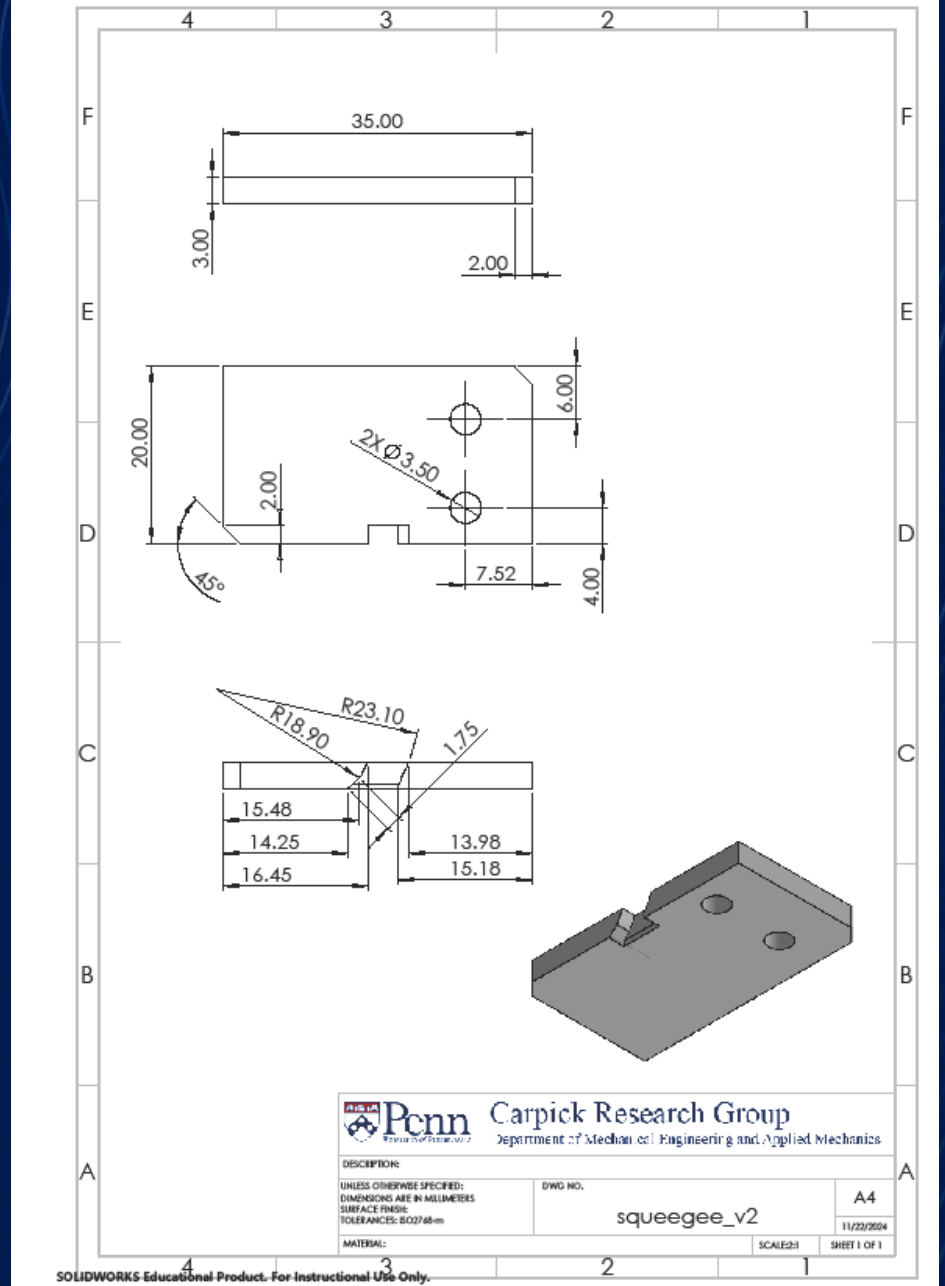
35.00
3.00
2.00
20.00
2.00
2X Ø3.50
6.00
45°
7.52
4.00
R18.90
R23.10
1.75
15.48
14.25
16.45
13.98
15.18
Penn
Carpick Research Group
Department of Mechanical Engineering and Applied Mechanics
DESCRIPTION:
UNLESS OTHERWISE SPECIFIED:
DIMENSIONS ARE IN MILLIMETERS
SURFACE FINISH:
TOLERANCES: ISO2768-m
DWG NO.
squeegee_v2
A4
11/22/2024
MATERIAL:
SCALE:2:1
SHEET 1 OF 1
SOLIDWORKS Educational Product. For Instructional Use Only.

Penn Engineering
University of Pennsylvania

ZrO_2 Nanoparticles as an Anti-Wear Grease Additive

Nathan Hryniewicz

Summer 2025

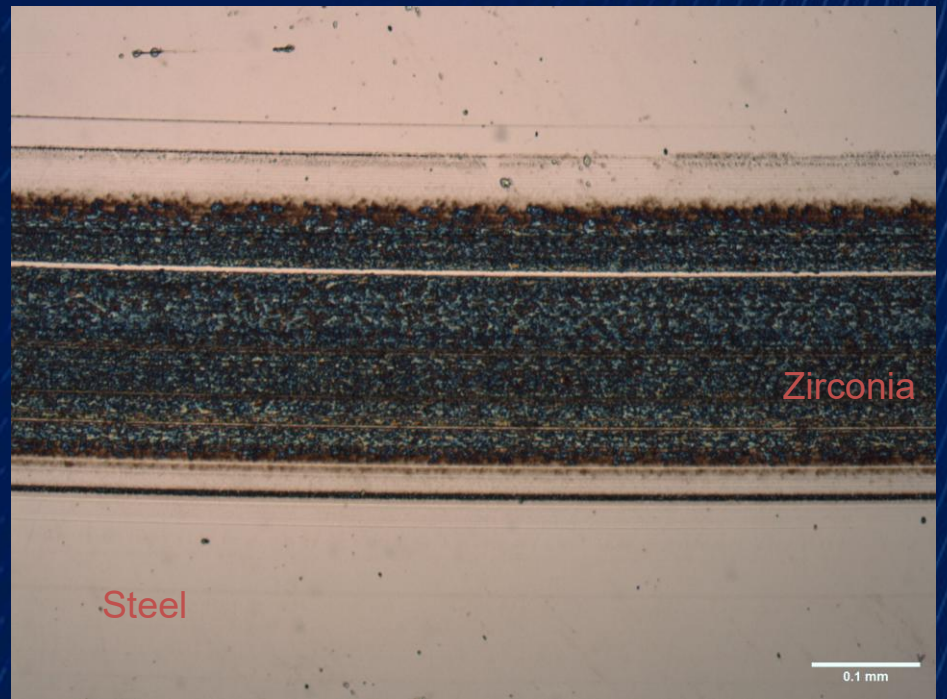

Motivation: Energy Efficiency

- Tribological losses = ~23% of global energy use[1]
- 80 to 90% of rolling element bearings are grease lubricated[2]
- **Additives *decouple* wear protection from viscosity to enable more efficient lubrication**

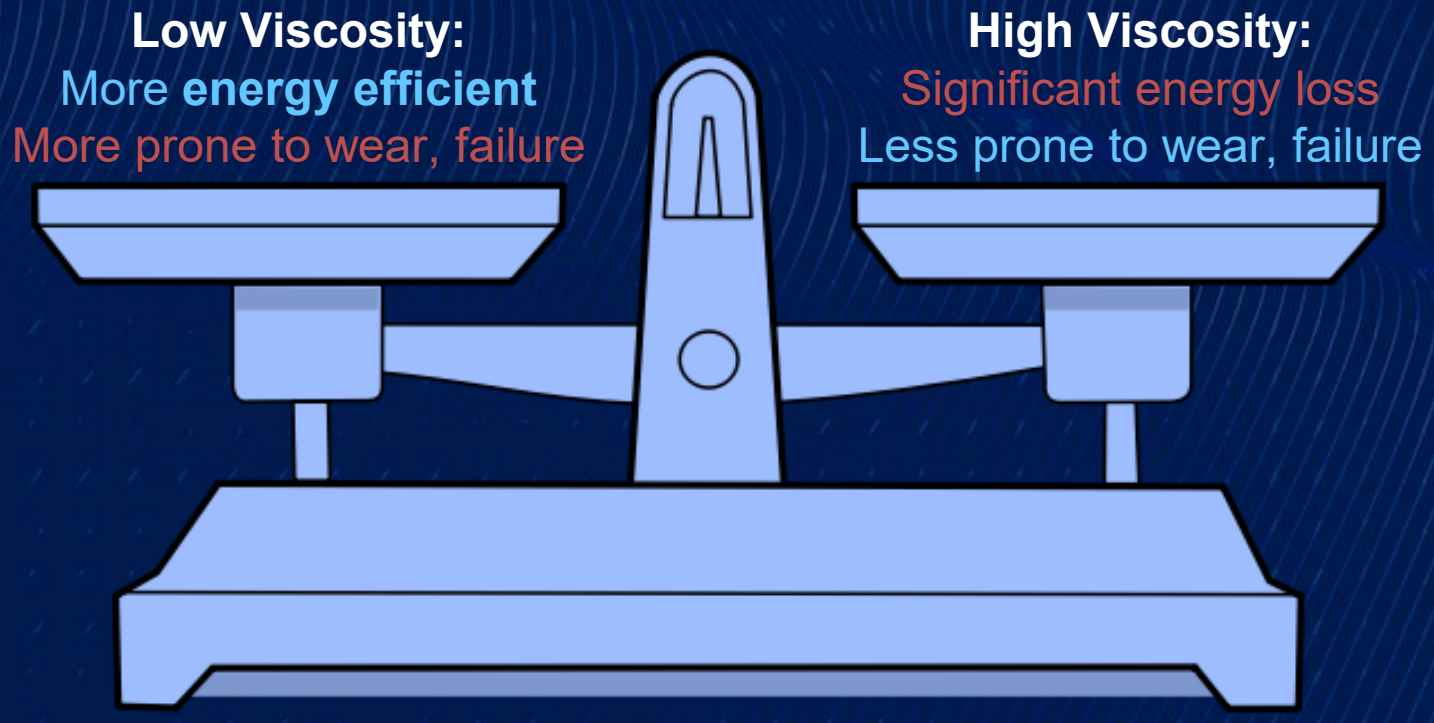

[1]Holmberg and Erdemir (2017) [2]Lugt (2012)

How can we utilize nanoparticle additives in grease?

- Nanoparticle additives form a protective film at contact[1]
- Film formation mechanism is well studied in oil, **not grease**
- **How can we achieve a reliable film in grease?**

Oil

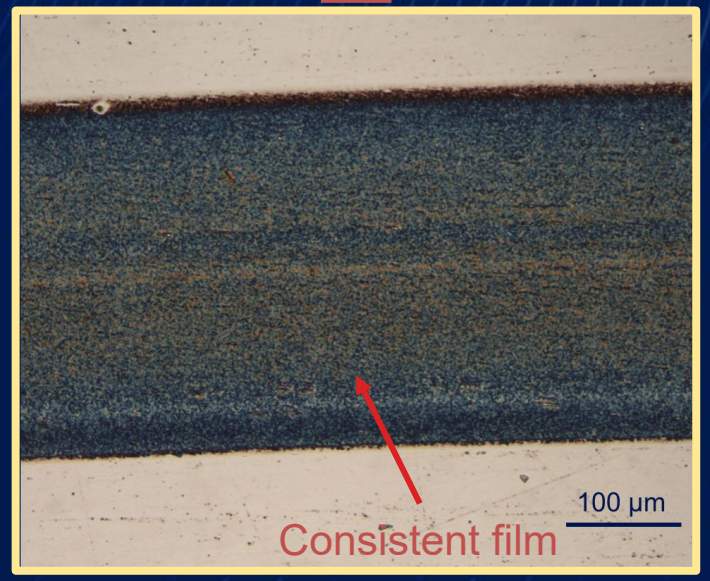

Grease

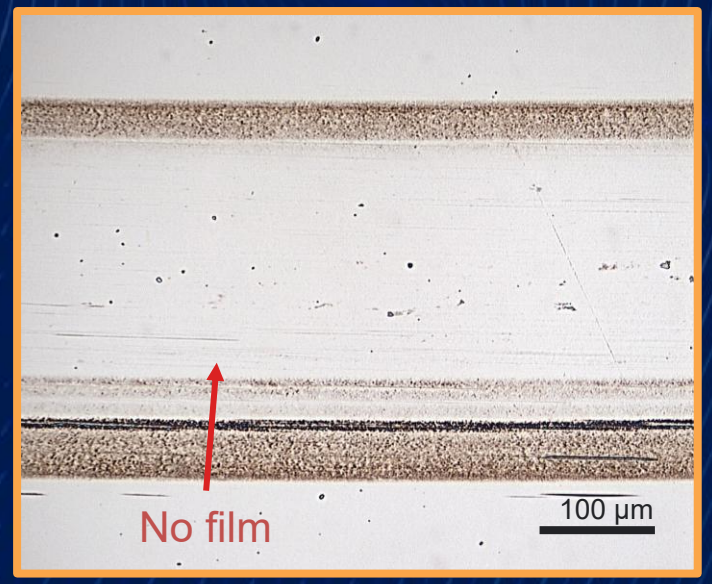

*Comparison is under identical conditions

[1]Lamascus (2024)

Hypothesis: Thickener layer might prevent *tribosintering*

- To form a film, nanoparticles must be under stress[1]
- The thickener structure of grease could prevent this
- **To overcome this, higher stress conditions could be required**

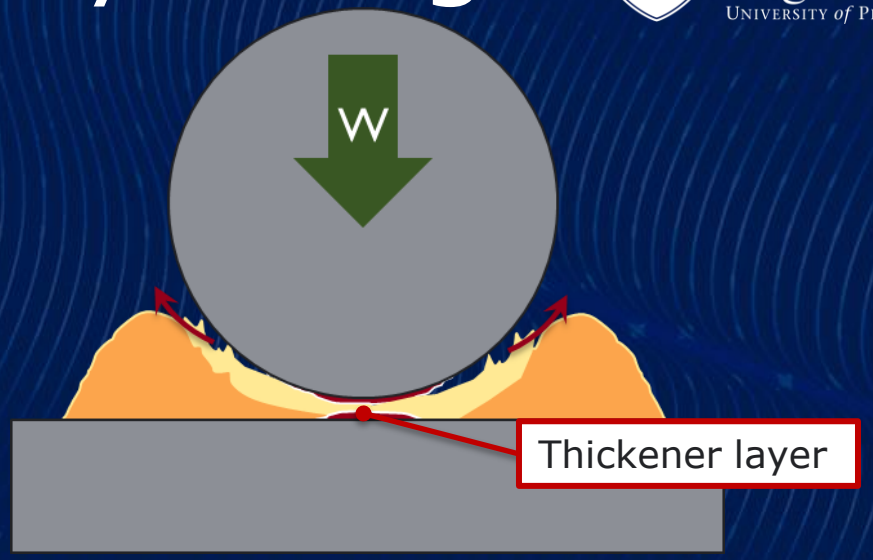

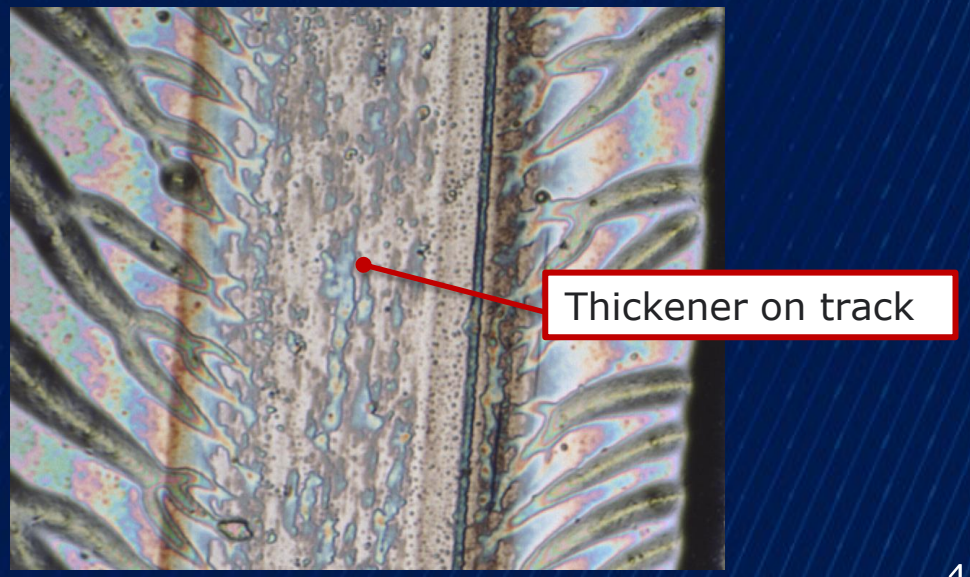

[1]Lamascus (2024)

Experimental Setup

- These results would not be possible without the custom fixtures that were custom designed and manufactured for this project (https://nhryn.tech/Summer24.pdf)

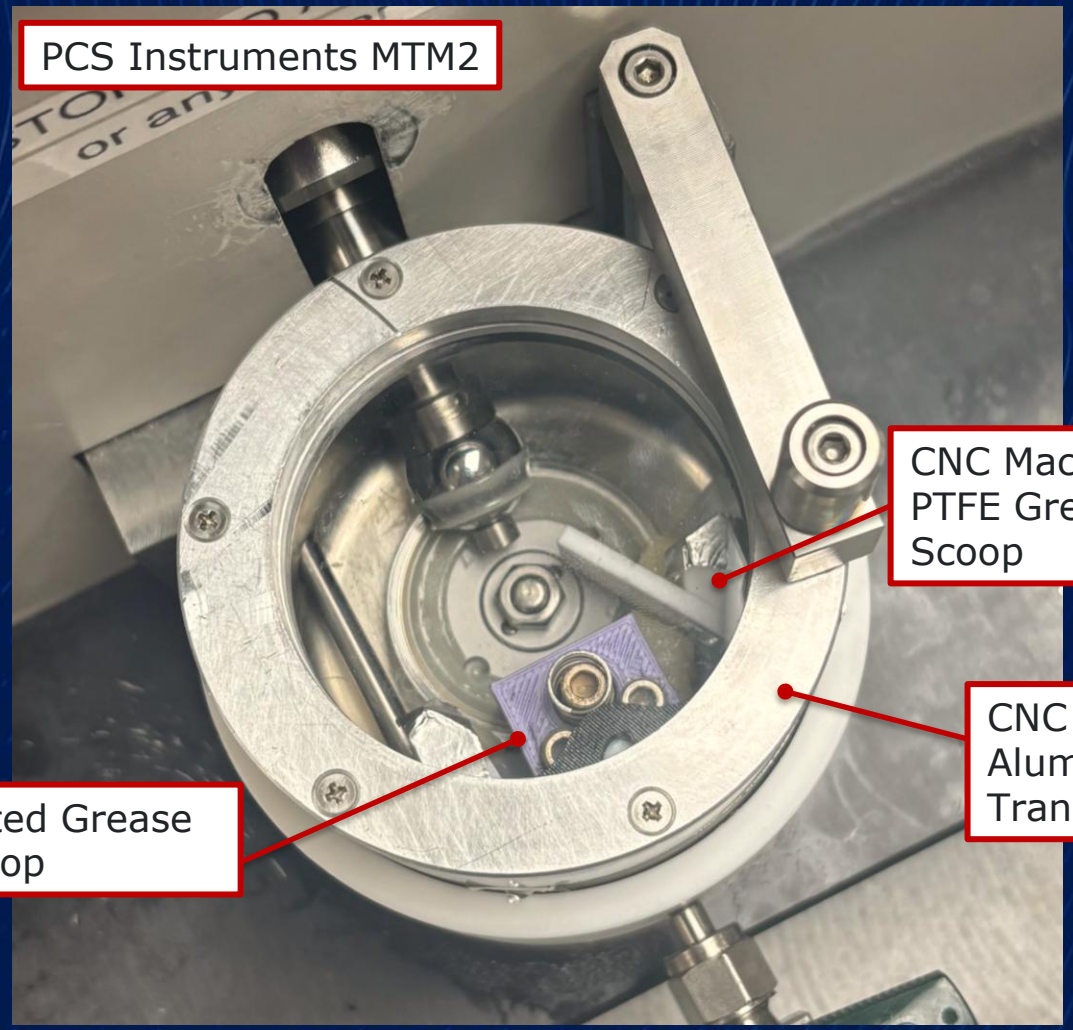

Experimental Results

- Tribometer tests show a clear relationship between stress and tribofilm growth
- Jump in film thickness at λ = 0.50 suggests a threshold, or possibly a yield point of the thickener

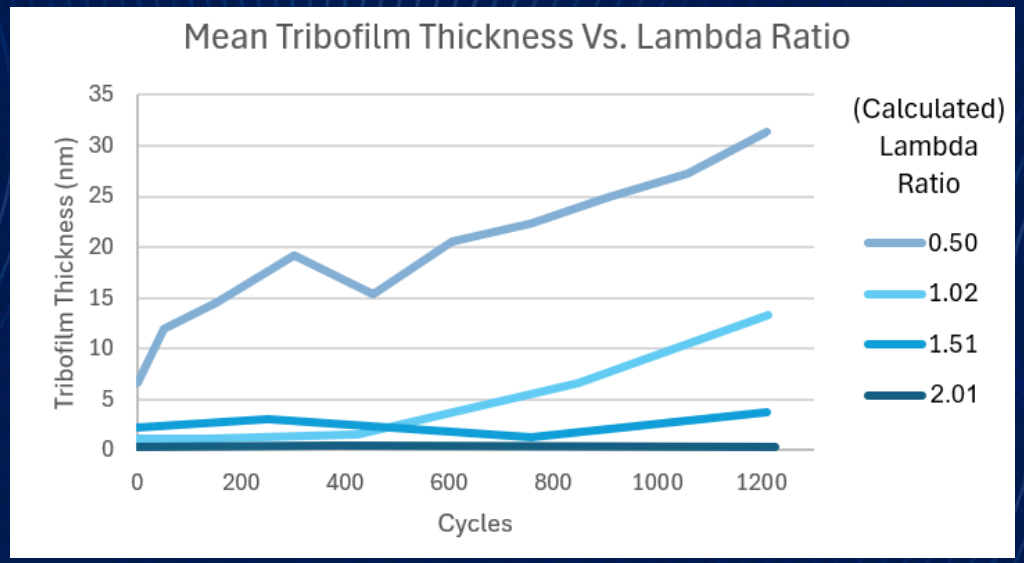

Lambda ratio: Lubricant film thickness/Composite roughness
Lower lambda = higher stress
*Film thickness is calculated by EHL formulas based on testing parameters for oil lubrication, not measured

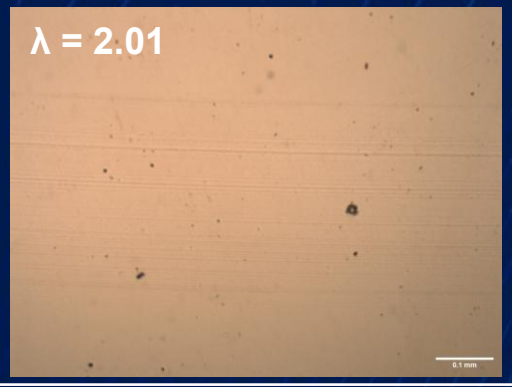

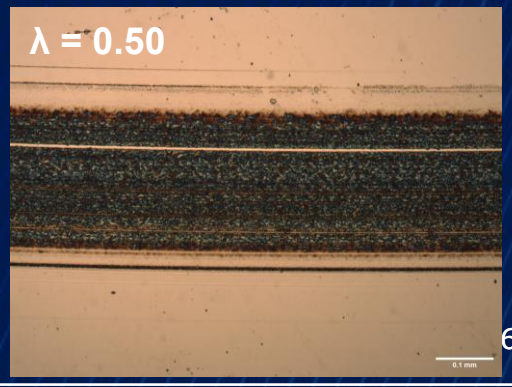

Side Project: Atomic Force Microscope Environmental Enclosure

Penn Engineering
University of Pennsylvania

Outdated AFM Enclosure had issues:

- One door would not close
- Still used temporary rigging in some places
- No lighting inside
- Door obstructed view of instruments when using the computer

Solution: Sliding Bifold door

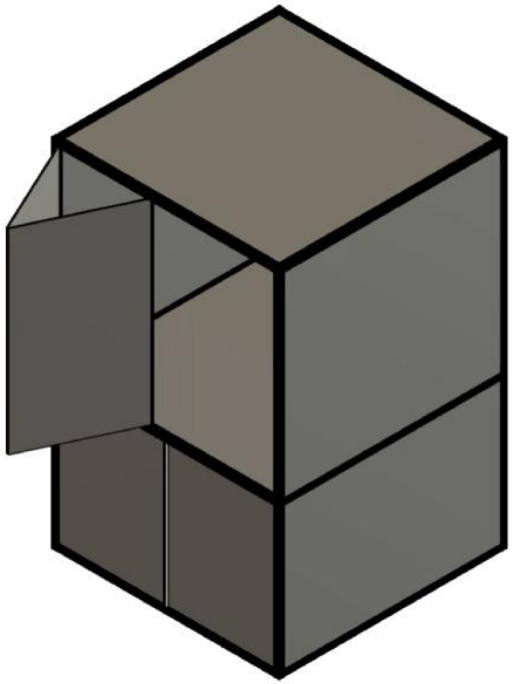

Video Demonstration

Key Components:

UHMWP Door Glide[1]

Custom Machined Glide Mounting Bracket

Advantages:

- Improves vibration isolation when door is open
- Improves ergonomics by removing door obstruction
- Door is less obstructive of walkway when opened

[1]https://8020.net/40-2051.html