Cryptography
Unit-3

Debojyoti Chakraborty
Department of CSE – Cyber Security,
PIET (Parul University)
Techdefence labs

Outline

- Public Key Cryptosystems with Applications
- Requirements and Cryptanalysis
- RSA algorithm
- RSA computational aspects and security
- Diffie-Hillman Key Exchange algorithm
- Man-in-Middle attack

Symmetric key Encryption

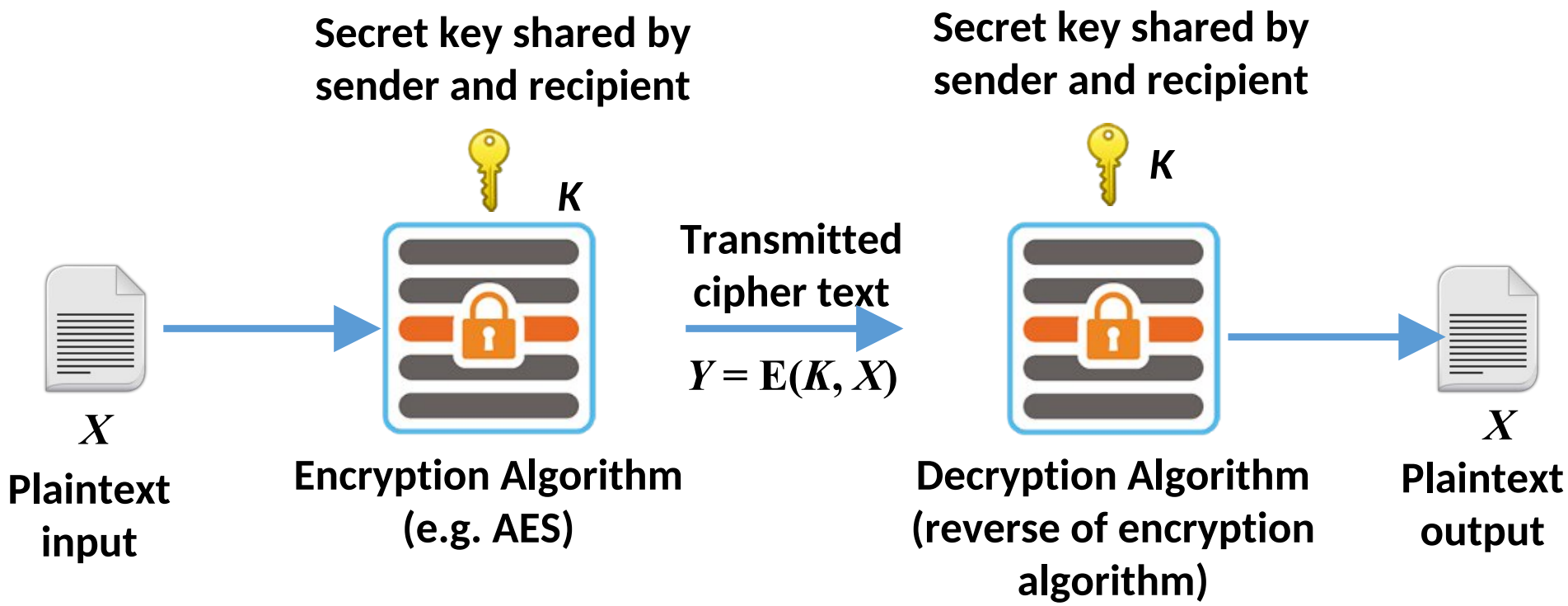

Asymmetric key Encryption with Public Key

- The entire encrypted message serves as a **confidentiality**.

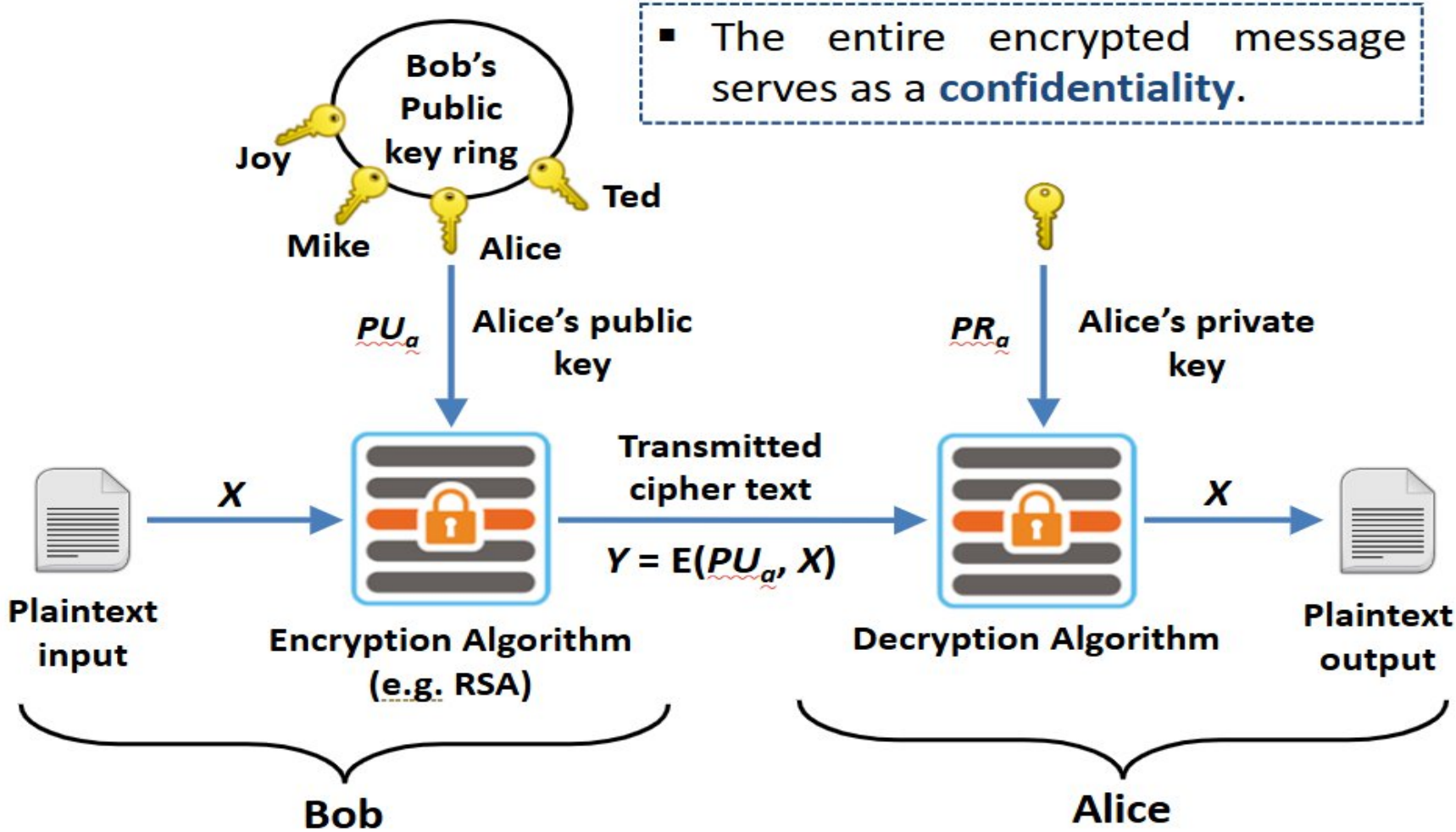

Asymmetric key Encryption with Private Key

- The entire encrypted message serves as a **digital signature**.

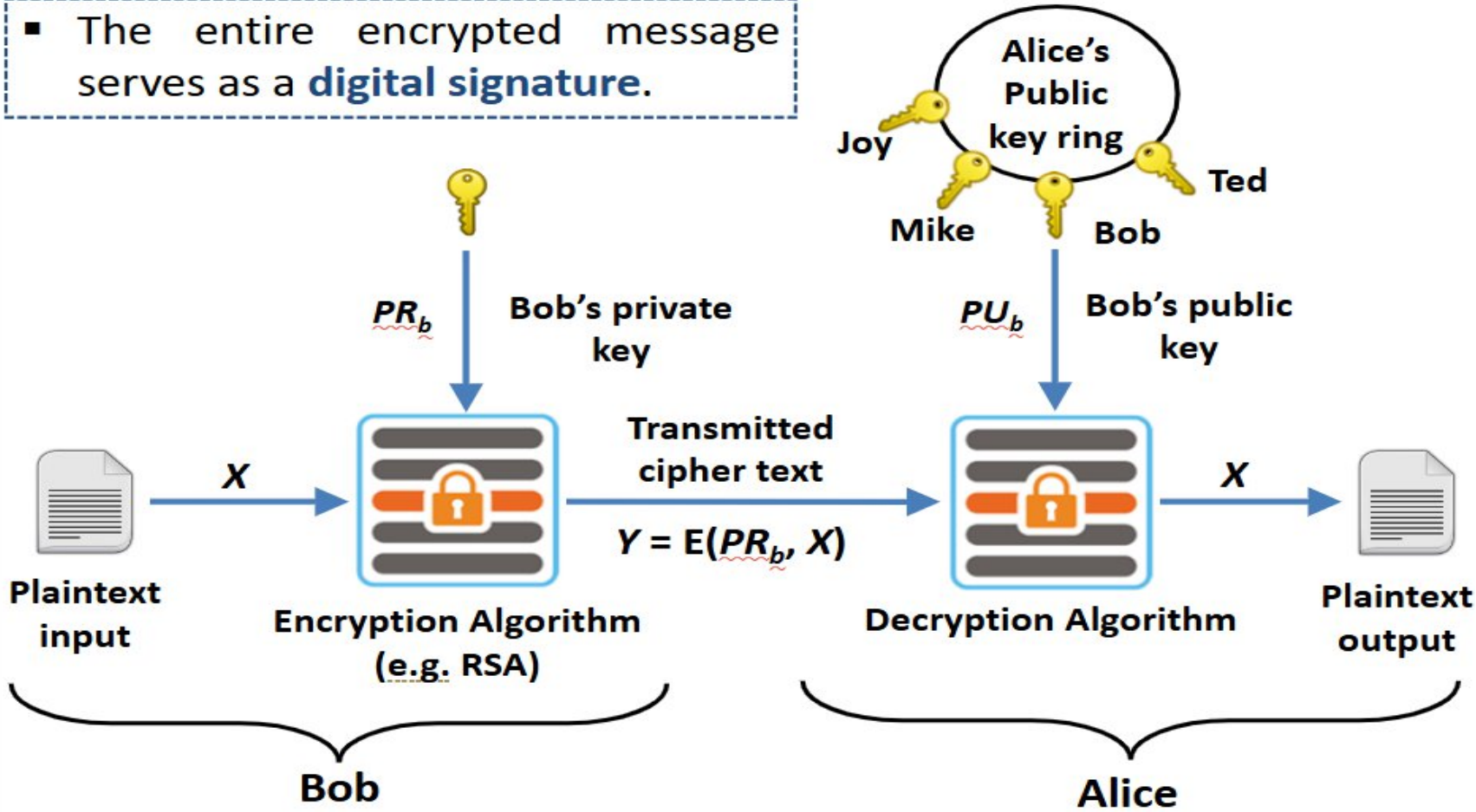

Authentication and Confidentiality

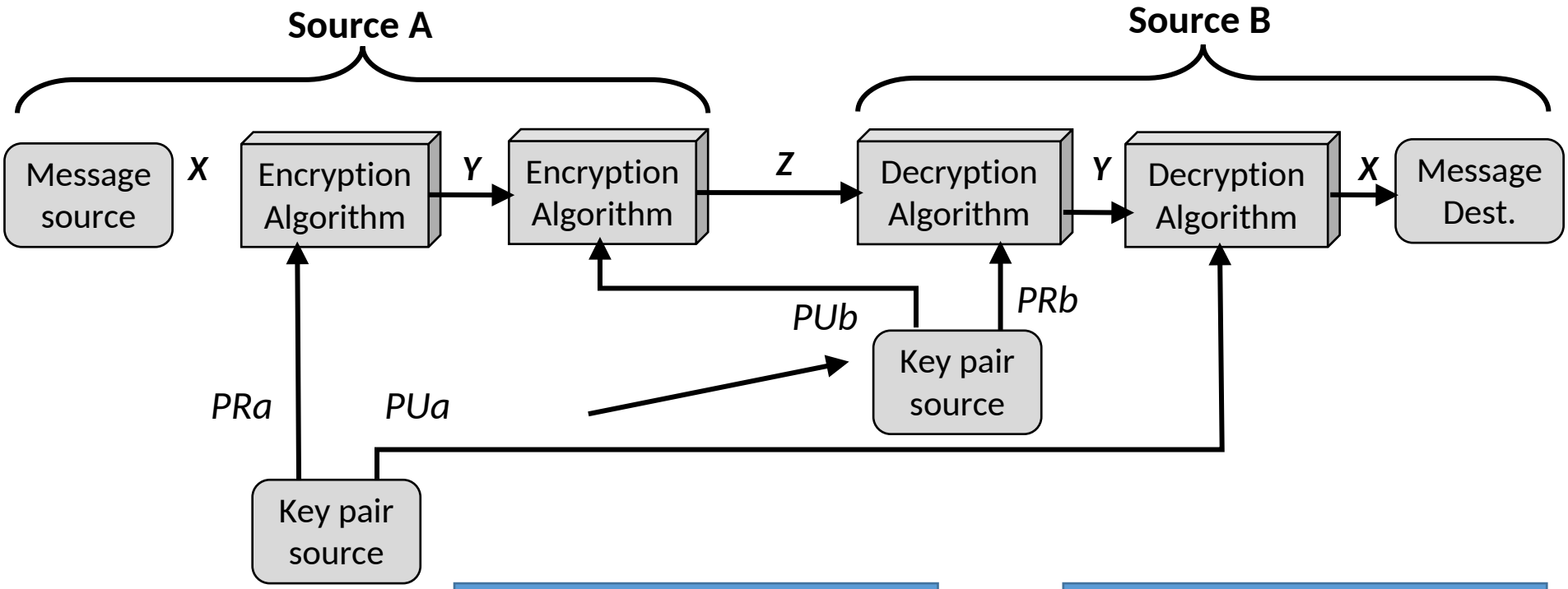

$Z = E(PU_b, E(PR_a, X))$

$X = D(PU_a, D(PR_B, Z))$

Applications for Public-Key Cryptosystems

- **Encryption/decryption:** The sender encrypts a message with the recipient's public key.
- **Digital signature:** The sender "signs" a message with its private key. Signing is achieved by a cryptographic algorithm applied to the message or to a small block of data that is a function of the message.
- **Key exchange:** Two sides cooperate to exchange a session key. Several different approaches are possible, involving the private key(s) of one or both parties.

RSA Algorithm

- **RSA** is a block cipher in which the Plaintext and Ciphertext are represented as integers between **0** and **n-1** for some n.
- Large messages can be broken up into a number of blocks.
- Each block would then be represented by an integer.

Step-1: Generate Public key and Private key

Step-2: Encrypt message using Public key

Step-3: Decrypt message using Private key

Step-1: Generate Public key and Private key

- Select two large prime numbers: **p** and **q**
- Calculate modulus : **$n = p * q$**
- Calculate Euler's totient function : **$\varphi(n) = (p-1) * (q-1)$**
- Select **e** such that **e** is **relatively prime** to **$\varphi(n)$** and **$1 < e < \varphi(n)$**

Two numbers are relatively prime if they have no common factors other than 1

- Determine **d** such that **$d * e \equiv 1 \pmod{\varphi(n)}$**
- Publickey : **PU = { e, n }**
- Privatekey : **PR = { d, n }**

Step-1: Generate Public key and Private key

- Select two large prime numbers: **p = 3** and **q = 11**
- Calculate modulus : **n = p * q, n = 33**
- Calculate Euler's totient function : **φ(n) = (p-1) * (q-1)**

  φ(n) = (3 – 1) * (11 – 1) = 20
- Select **e** such that **e** is **relatively prime** to **φ(n)** and **1 < e < φ(n)**
- We have several choices for **e : 7, 11, 13, 17, 19** Let's take **e = 7**
- Determine **d** such that **d * e ≡ 1 (mod φ(n))**
- **? * 7 ≡ 1 (mod 20), 3 * 7 ≡ 1 (mod 20)**

- Public key : **PU = { e, n } , PU = { 7, 33 }**
- Private key : **PR = { d, n }, PR = { 3, 33 }**

- This is equivalent to finding d which satisfies de = 1 + j.φ(n) where j is any integer.
- We can rewrite this as d = (1 + j. φ(n)) / e

Step-2 : Encrypt Message

- Encryption Using Public key: $C = M^e \bmod n$

Ciphertext

Input Message

Publickey

PU = { e, n } , PU = { 7, 33 }

For message M = 14

$C = 14^7 \bmod 33$

$C = [(14^1 \bmod 33) \times (14^2 \bmod 33) \times (14^4 \bmod 33)] \bmod 33$

$C = (14 \times 31 \times 4) \bmod 33 = 1736 \bmod 33$

$C = 20$

Step-3 : Decrypt Message

- Encryption Using Public key: $M = C^d \bmod n$

Plaintext Message

Cipher Message

Privatekey

PR = { d, n } , PR = { 3, 33 }

For Ciphertext C = 20

$M = 20^3 \bmod 33$

$M = [(20^1 \bmod 33) \times (20^2 \bmod 33)] \bmod 33$

$M = (20 \times 4) \bmod 33 = 80 \bmod 33$

$M = 14$

Example RSA Algorithm

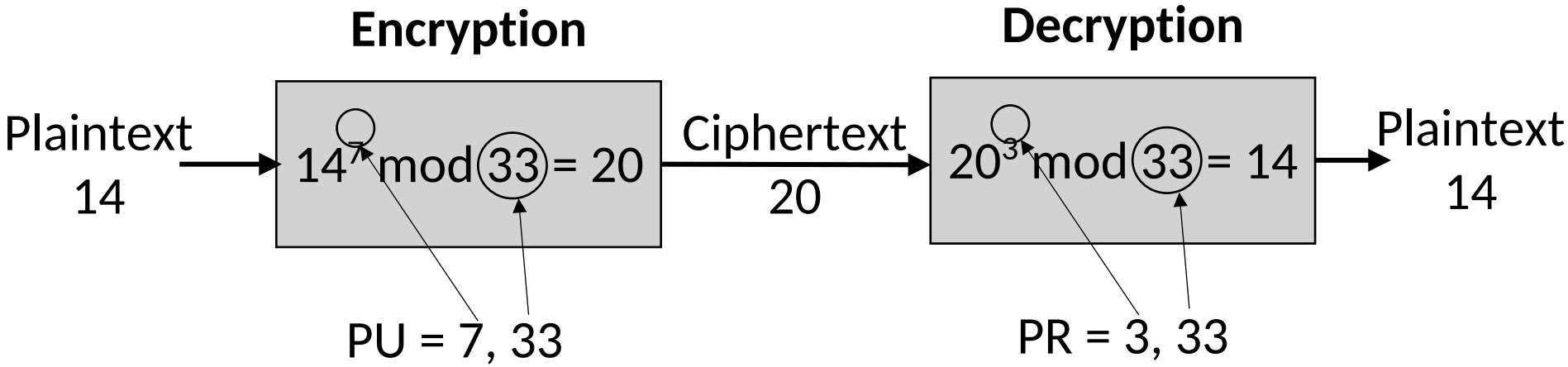

RSA Example

- Find n, φ(n), e, d for p=7 and q= 19 then demonstrate encryption and decryption for M = 6

$n = p * q = 7 * 19 = 133$

$\varphi(n) = (p - 1) * (q - 1) = 108$

Finding e relatively prime to 108
e = 2 => GCD(2, 108) = 2 (no)
e = 3 => GCD(3, 108) = 3 (no)
e = 5 => GCD(5, 108) = 1 (Yes)

- Finding d such that (d * e) mod φ(n) = 1
- We can rewrite this as d = (1 + j . φ(n)) / e

j = 0 => d = 1 / 5 = 0.2 ≈ integer ? (no)
j = 1 => d = 109 / 5 = 21.8 ≈ integer ? (no)
j = 2 => d = 217 / 5 = 43.4 ≈ integer ? (no)
j = 3 => d = 325 / 5 = 65 integer ? (yes)

Public key :
PU = { e, n } = {5, 133}
Private key :
PR = { d, n } = {65, 133}

RSA Example – cont…

- Encryption:

$C = M^e \bmod n$

$PU = \{ e, n \}$, $PU = \{ 5, 133 \}$

For message $M = 6$

$C = 6^5 \bmod 133$
$C = 7776 \bmod 33$
$C = 62$

- Decryption:

$M = C^d \bmod n$

$PR = \{ d, n \}$, $PU = \{ 65, 133 \}$

For $C = 62$

$M = 62^{65} \bmod 133$
$M = 2666 \bmod 33$
$M = 6$

RSA Example

- P and Q are two prime numbers. P=7, and Q=17. Take public key E=5. If plain text value is 10, then what will be cipher text value according to RSA algorithm?
- n = 119
- φ(n) = 96
- e = 5
- d = 77
- PU = { 5, 119 }
- PR = {77, 119}
- $C = 10^5 \bmod 119 \Rightarrow C = 40$

Outline

- Cryptographic Hash Functions
- Applications
- Simple hash functions
- Requirements and security
- Hash functions based on Cipher Block Chaining
- Secure Hash Algorithm (SHA)

Hash Function

- A hash function **H** accepts a variable-length block of data **M** as input and produces a fixed-size hash value **h = H(M)**.
- A "good" hash function has the property that the results of applying a change to any bit or bits in **M** results, with high probability, in a change to the **hash code**.

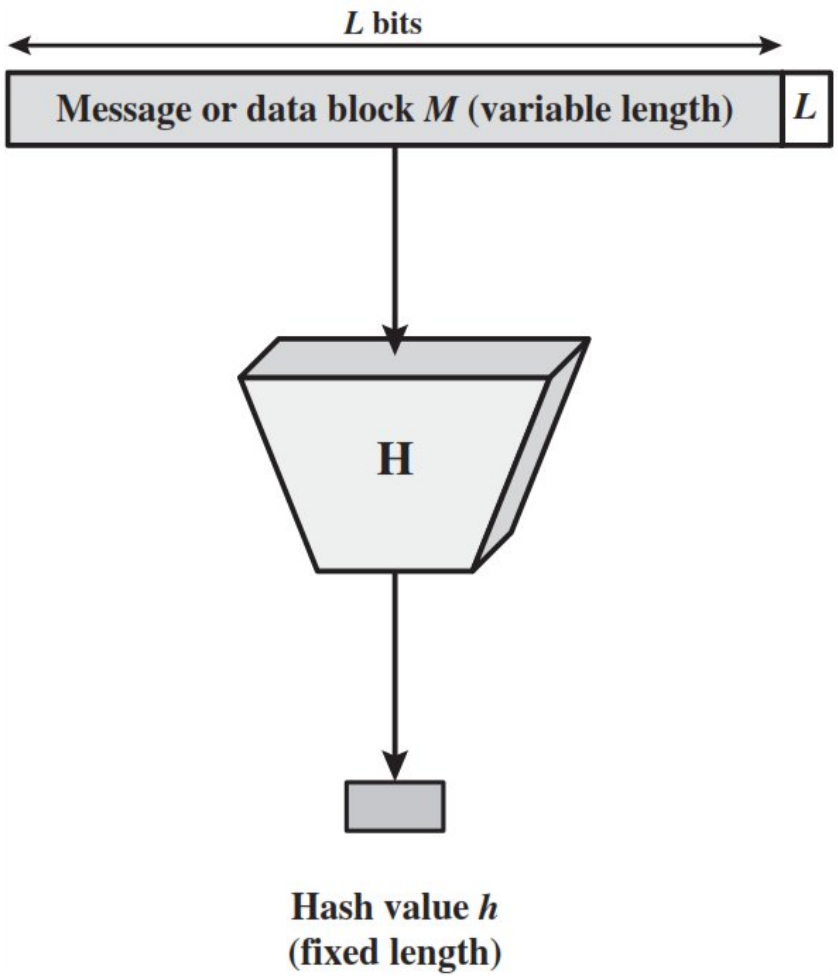

Applications of Cryptographic Hash Functions

1. Message authentication
2. Digital Signature
3. One-way password file

1. Message Authentication

- **Message authentication** is a mechanism or service used to verify the integrity of a message.

- Message authentication assures that data received are exactly as sent (i.e., contain no modification, insertion, deletion, or replay).

- When a hash function is used to provide message authentication, the **hash function value** is often referred to as a **message digest**.

Message authentication method - 1

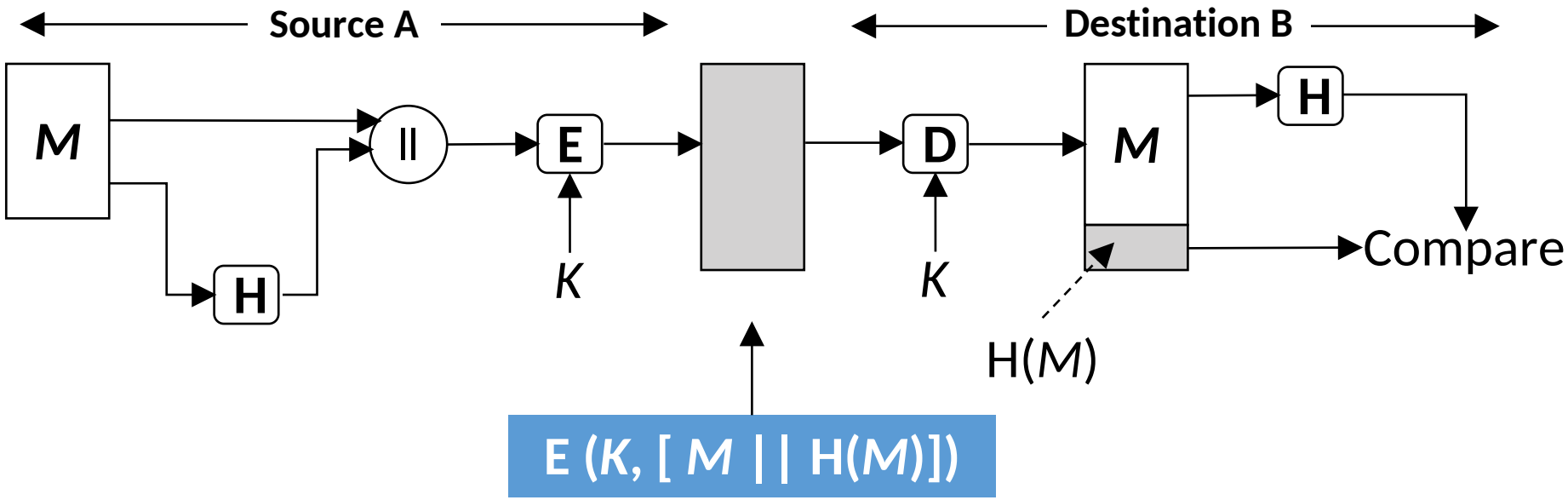

- Only A and B share the secret key, the message must have come from A and has not been altered.
- The hash code provides the structure required to achieve authentication.
- Because encryption is applied to the entire message plus hash code, confidentiality is also provided.

Message authentication method - 2

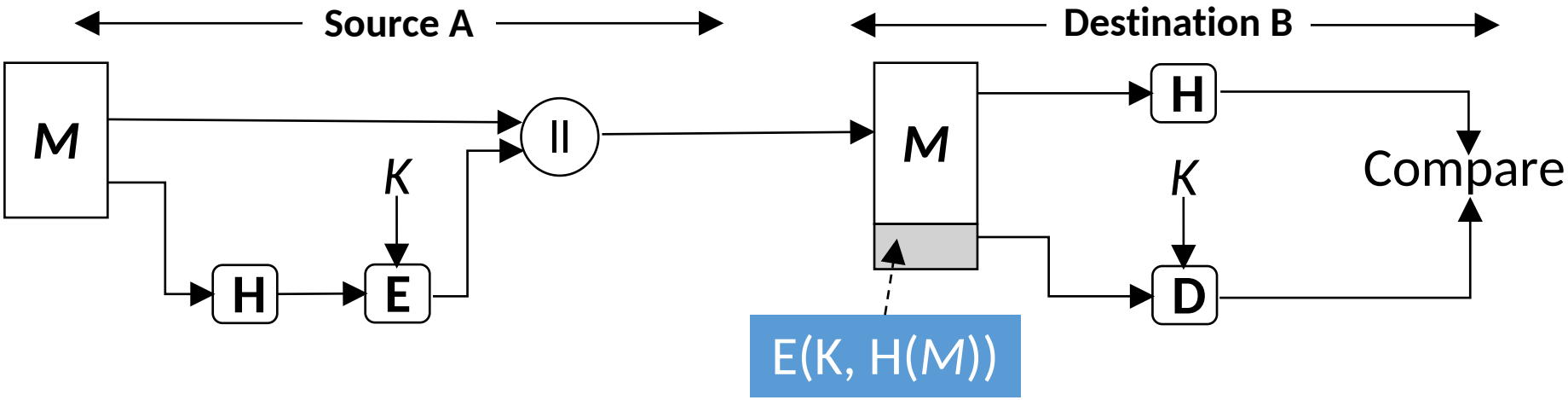

- Only the hash code is encrypted, using symmetric encryption.
- This reduces the processing burden for those applications that do not require confidentiality.

Message authentication method - 3

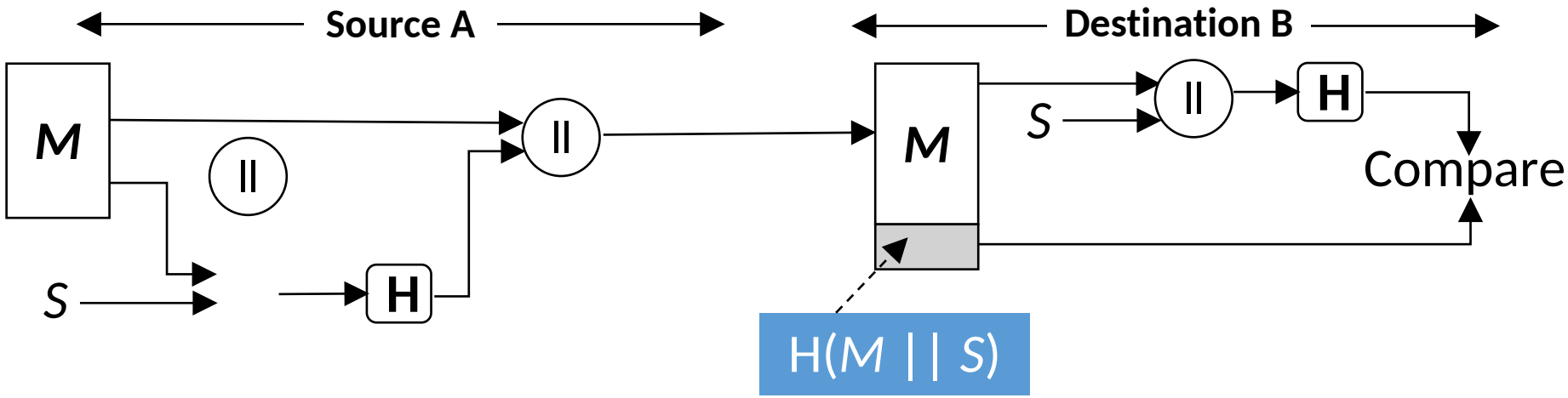

- It is possible to use a hash function but no encryption for message authentication.
- A and B share a common secret value S.
- A computes the hash value over the concatenation of M and S and appends the resulting hash value to M.
- Because B possesses S, it can recompute the hash value to verify.
- An opponent cannot modify an intercepted message.

Message authentication method - 4

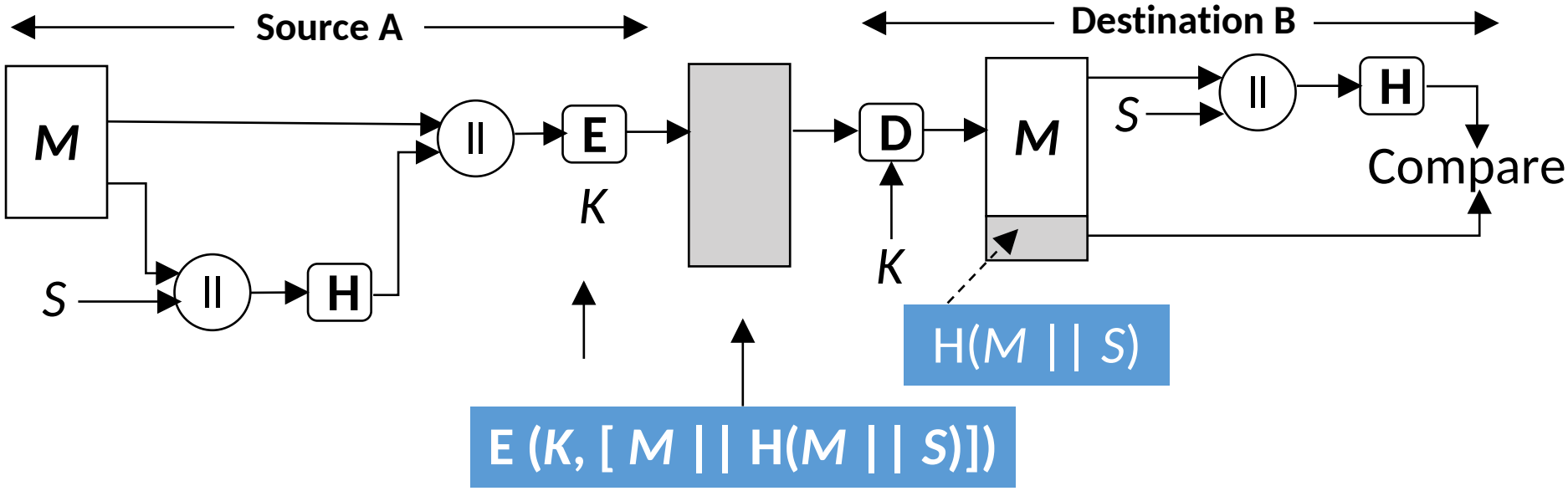

- Confidentiality can be added to the approach of method (3) by encrypting the entire message plus the hash code.

MAC (Message Authentication Code)

- More commonly, message authentication is achieved using a **MAC** also known as **keyed hash function**.
- MACs are used between two parties that share a secret key to authenticate information exchanged between those parties.
- A **MAC** function takes as input a secret key and a data block and produces a hash value, referred to as the **MAC**.
- The combination of hashing and encryption results in an overall function that is, in fact, a MAC (Method -2 in previous slide).

Digital Signature

- A **digital signature** is a mathematical technique used to validate the authenticity and integrity of a message, software or digital document.
- The operation of the digital signature is similar to that of the **MAC**.
- In the case of the **digital signature**, the hash value of a message is encrypted with a user's **private key**.
- Anyone who knows the user's **public key** can verify the integrity of the message that is associated with the **digital signature**.

Digital Signature method - 1

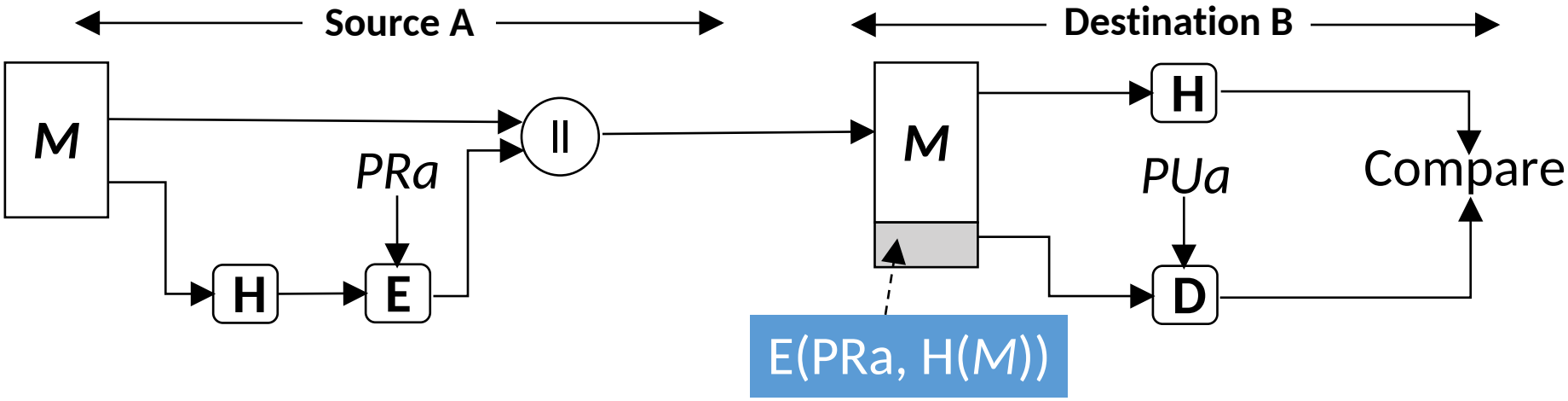

- The hash code is encrypted, using public-key encryption with the sender's private key.
- This provides authentication.
- It also provides a **digital signature**, because only the sender could have produced the encrypted hash code.

Digital Signature method - 2

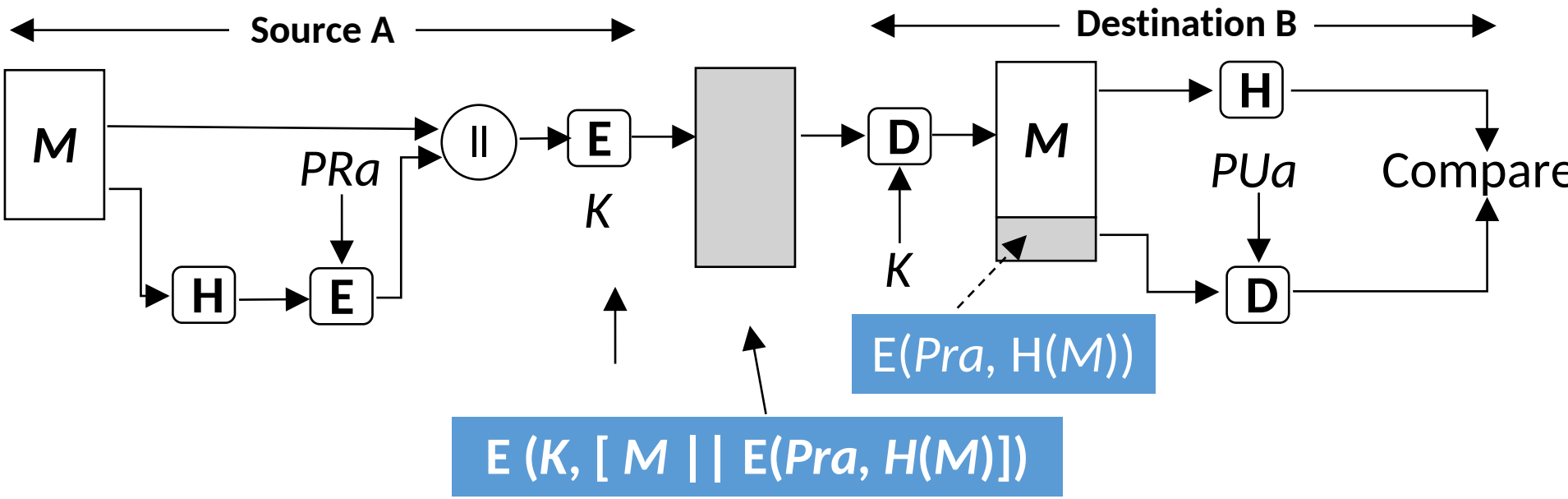

- If confidentiality as well as a digital signature is desired, then the message plus the private-key-encrypted hash code can be encrypted using a symmetric secret key.

Security Requirements

1. Disclosure
2. Traffic analysis
3. Masquerade
4. Content modification
5. Sequence modification
6. Timing modification
7. Source repudiation
8. Destination repudiation

Requirements for hash functions

1. Can be applied to any *sized message M*.
2. Produces *fixed-length output h*.
3. It is *easy to compute h=H(M)* for any *message M*.
4. Given hash value *h* is *infeasible* to find *y* such that ($H(y) = h$)
   - *One-way property*
5. For given block *x*, it is computational infeasible to find $y \neq x$ with $H(y) = H(x)$
   - *Weak collision resistance*
6. It is computationally infeasible to find messages *m1* and *m2* with $H(m1) = H(m2)$
   - *Strong collision resistance*

Simple Hash Function

- The input (message, file, etc.) is viewed as a sequence of n-bit blocks.
- The input is processed one block at a time in an iterative fashion to produce an n-bit hash function.
- One of the simplest hash functions is the bit-by-bit exclusive-OR (XOR) of every block.

$$C_i = b_{i1} \oplus b_{i2} \oplus \ldots \oplus b_{im}$$

Where,

C_i = i^{th} bit of the hash code $1 \leq i \leq n$

m = number of n-bit blocks in the input

b_{ij} = i^{th} bit in j^{th} block

SHA - Secure Hash Algorithm

	SHA - 1	SHA - 224	SHA - 256	SHA - 384	SHA - 512
Message Digest Size	160	224	256	384	512
Message Size	$< 2^{64}$	$< 2^{64}$	$< 2^{64}$	$< 2^{128}$	$< 2^{128}$
Block Size	512	512	512	1024	1024
Word Size	32	32	32	64	64
Number of Steps	80	64	64	80	80

SHA - 512

- The algorithm takes as input a message with a maximum length of less than **2^{128}** bits and produces as output a **512-bit** message digest.
- The input is processed in **1024-bit** blocks.

Message Digest Generation using SHA -512

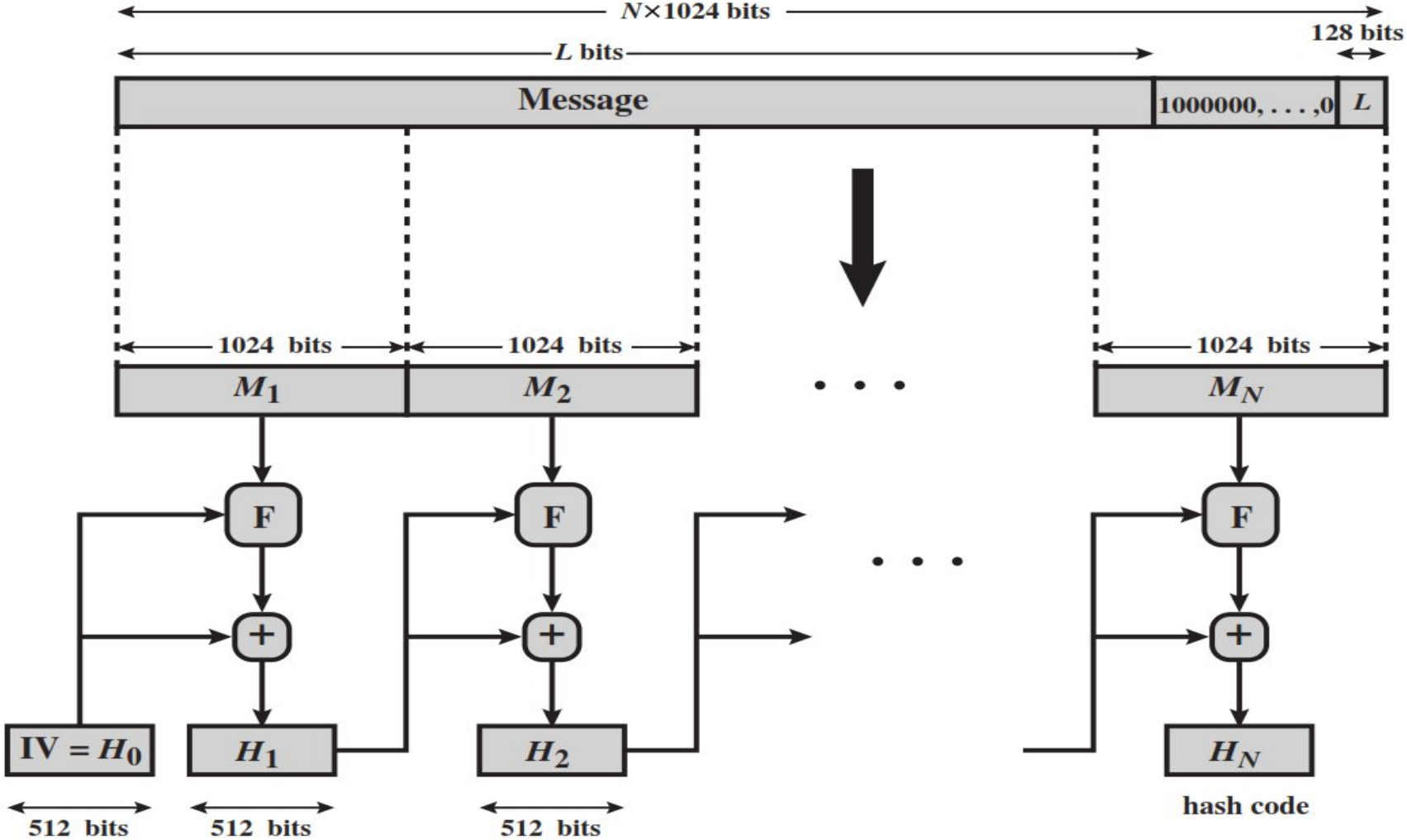

Message Digest Generation using SHA -512

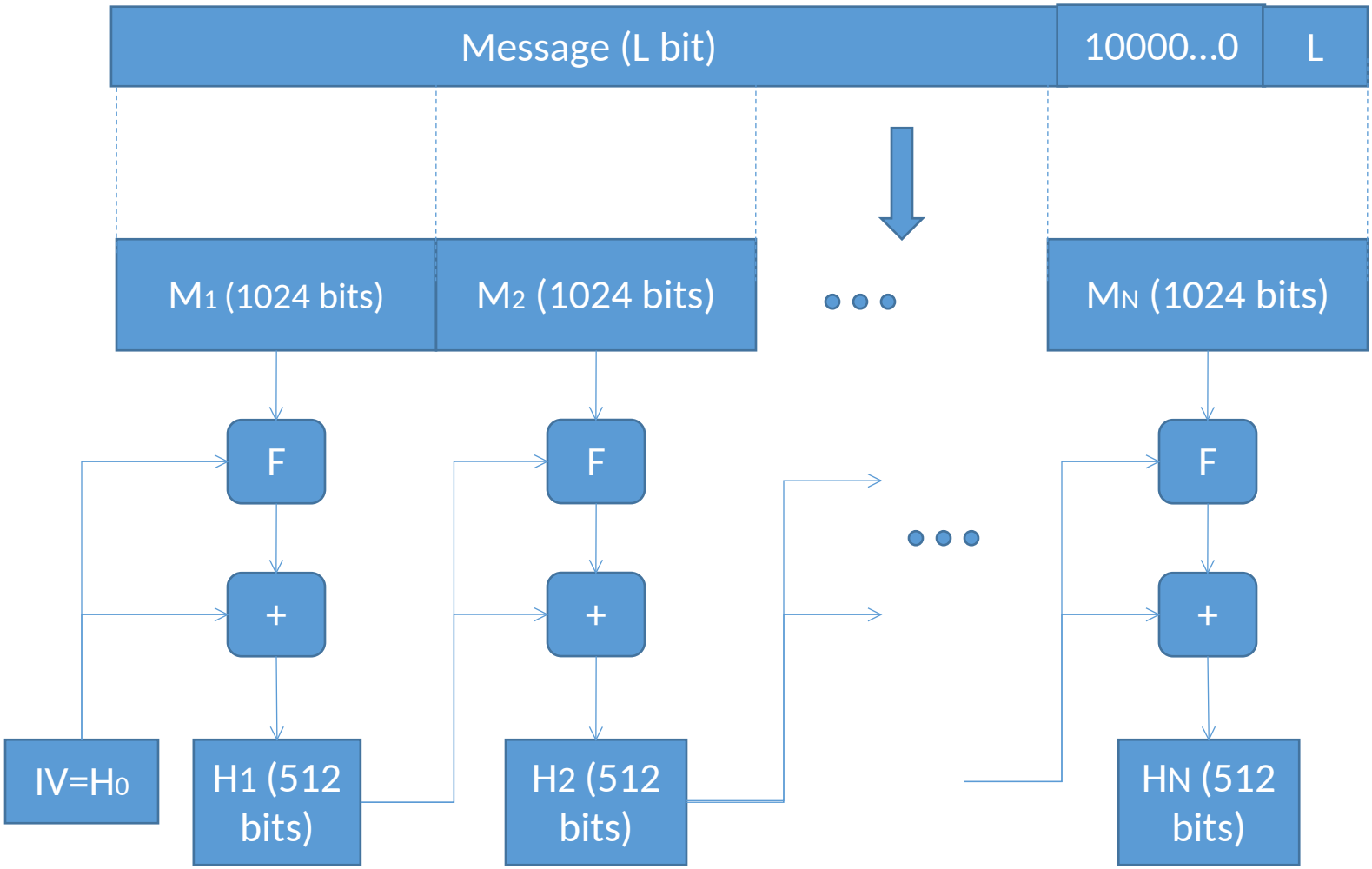

Step -1 Append Padding Bits

- The message is padded so that its length is congruent to **896 modulo 1024** [length ≡ 896(mod 1024)] .
- Padding is always added, even if the message is already of the desired length.
- Thus, the number of padding bits is in the range of **1 to 1024**.
- The padding consists of a single 1 bit followed by the necessary number of 0 bits.

Step -2 Append Length

- A block of 128 bits is appended to the message.
- This block is treated as an unsigned 128-bit integer (most significant byte first) and contains the **length of the original message** (before the padding).

Step -3 Initialize hash buffer

- The outcome of the first two steps produces a message that is an integer multiple of 1024 bits in length.
- the expanded message is represented as the sequence of 1024-bit blocks **M_1 , M_2, … , M_N**, so that the total length of expanded message is *N* X 1024 bits.
- A 512-bit buffer is used to hold intermediate and final results of the hash function. The buffer can be represented as **eight 64-bit registers (a, b, c, d, e, f, g, h)**.

Step -4 Process message in 1024-bit (128-word) blocks

- The heart of the algorithm is a module that consists of **80 rounds**; this module is labelled F

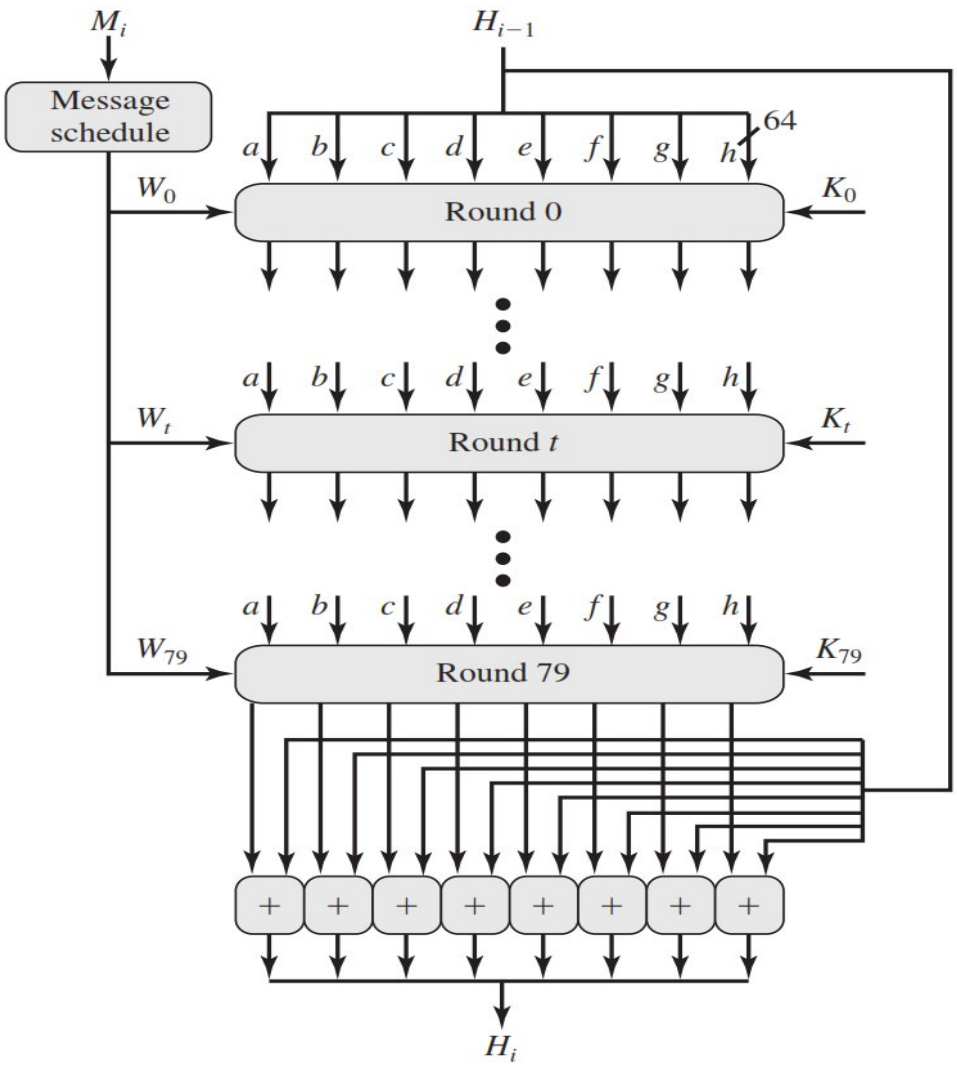

SHA-512 Processing of a Single 1024-Bit Block

SHA-512 Processing of a Single 1024-Bit Block

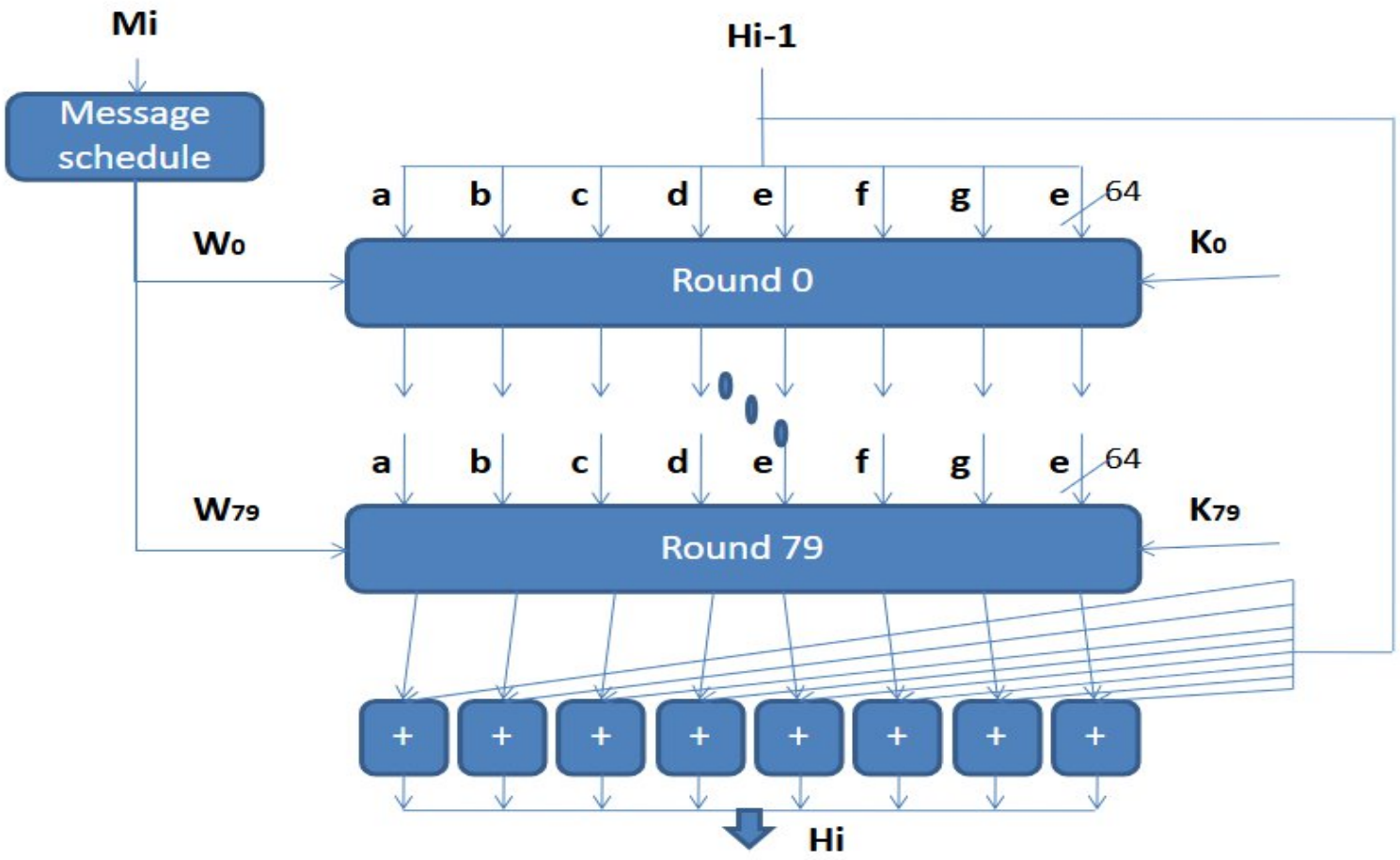

SHA-512 Processing of a Single 1024-Bit Block

- Each round takes as input the 512-bit buffer value, abcdefgh, and updates the contents of the buffer.
- At input to the first round, the buffer has the value of the intermediate hash value, H_{i-1}.
- Each round ***t*** makes use of a **64-bit value Wt**, derived from the current 1024-bit block being processed.
- The output of the eightieth round is added to the input to the first round **(H_i-1)** to produce H_i.

Step – 5 Output

- After all ***N* 1024-bit** blocks have been processed, the output from the ***N*th** stage is the **512-bit** message digest

SHA-512 Round Function

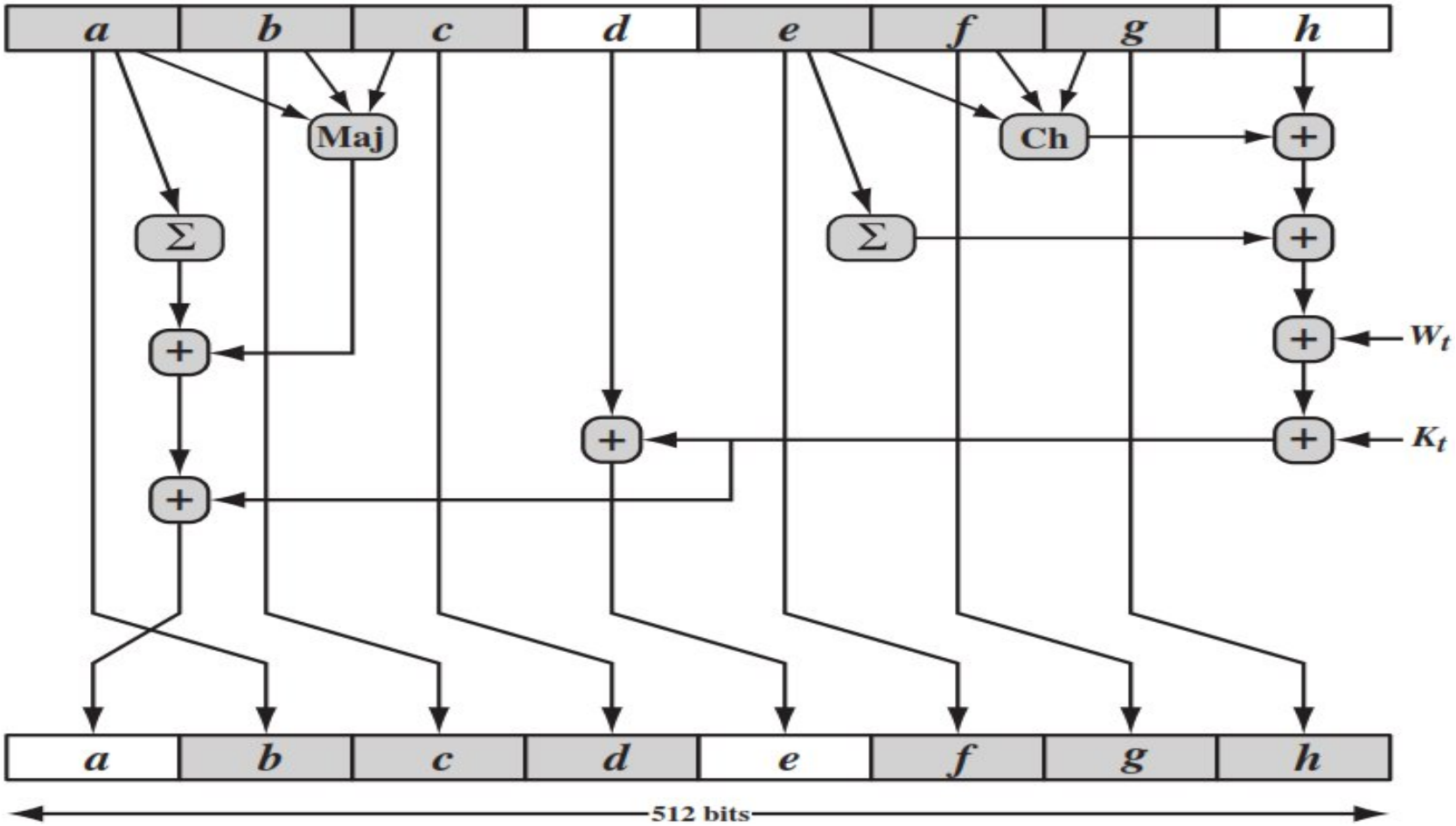

SHA-512 Round Function – Cont…

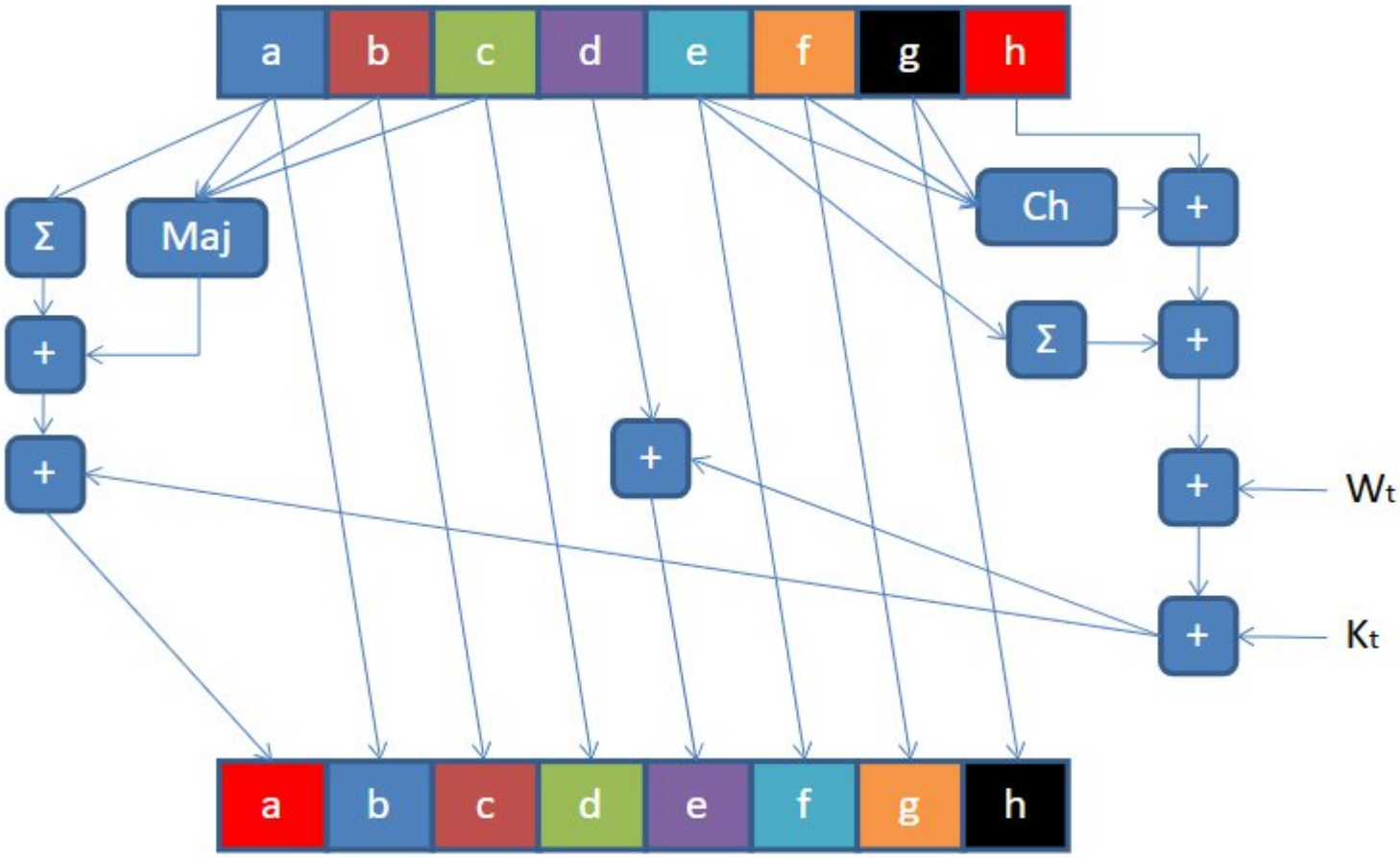

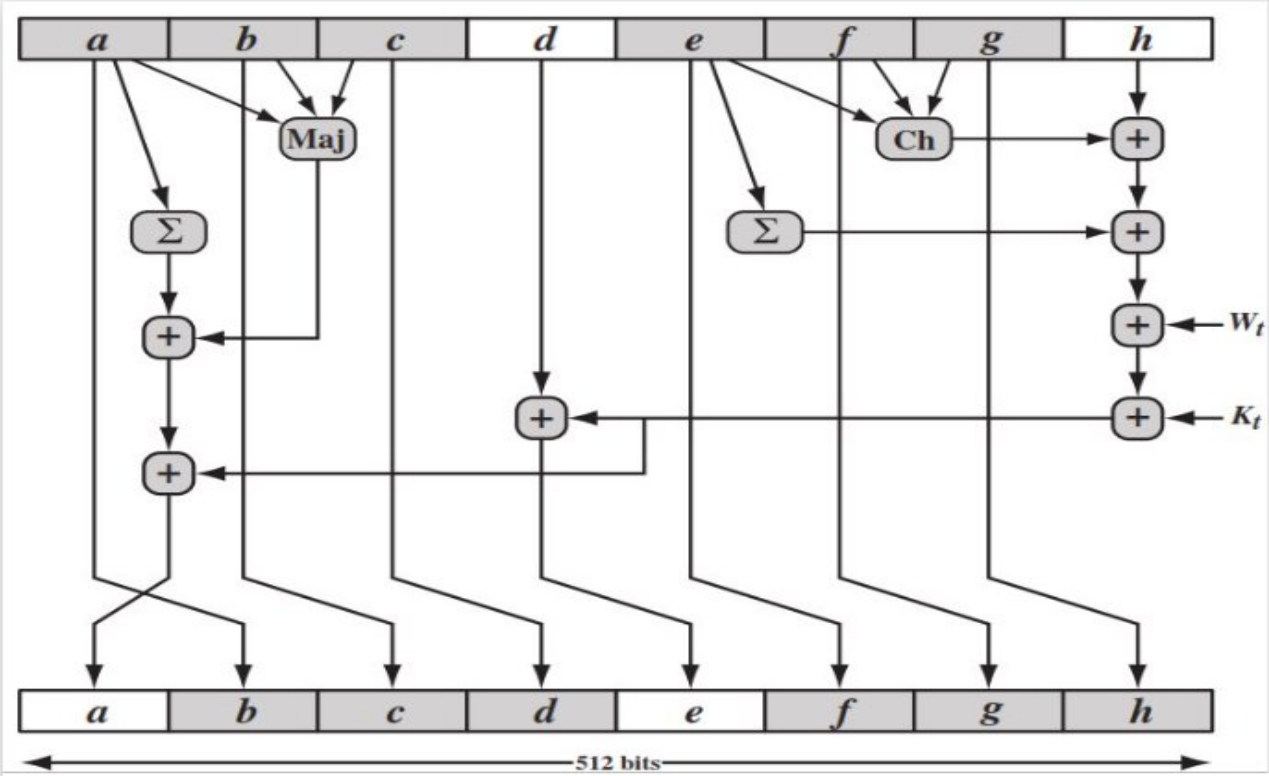

$$h = g$$
$$g = f$$
$$f = e$$
$$e = d + T_1$$

$$d = c$$
$$c = b$$
$$b = a$$
$$a = T_1 + T_2$$

$$T_1 = h + \mathrm{Ch}(e, f, g) + \left(\sum_1^{512} e\right) + W_t + K_t$$

$$T_2 = \left(\sum_0^{512} a\right) + \mathrm{Maj}(a, b, c)$$

SHA-512 Round Function Elements

- Maj(a,b,c) = (a AND b) XOR (a AND c) XOR (b AND c) Majority of arguments are true
- ∑(a) = ROTR(a,28) **XOR** ROTR(a,34) **XOR** ROTR(a,39)
- ∑(e) = ROTR(e,14) **XOR** ROTR(e,18) **XOR** ROTR(e,41)
- + = addition modulo 2^{64}
- K_t = a 64-bit additive constant
- W_t = a 64-bit word derived from the current 512-bit input block.

THANK YOU FOR LISTENING

ANY QUESTION ?

Parul® University | NAAC GRADE A++

https://paruluniversity.ac.in/