Parul® University
Vadodara, Gujarat

NAAC GRADE A++

Information and Communication Technology

Cryptography
Unit-5

Debojyoti Chakraborty
Department of CSE – Cyber Security, PIET (Parul University)
Techdefence labs

Content

- Web Security threats and approaches
- SSL architecture
- SSL Protocol
- Transport layer security
- HTTPS
- SSH

Secure Socket Layer (SSL)

- **Secure Socket Layer (SSL)** provides security services between TCP and applications that use TCP. The Internet standard version is called **Transport Layer Service (TLS)**.
- **SSL/TLS** provides **confidentiality** using symmetric encryption and **message integrity** using a message authentication code.
- **SSL/TLS** includes protocol mechanisms to enable two TCP users to determine the security mechanisms and services they will use.
- **SSL** is designed to make use of TCP to provide a reliable end-to-end secure service.

Relative Location of Security Facilities in the TCP/IP Protocol Stack

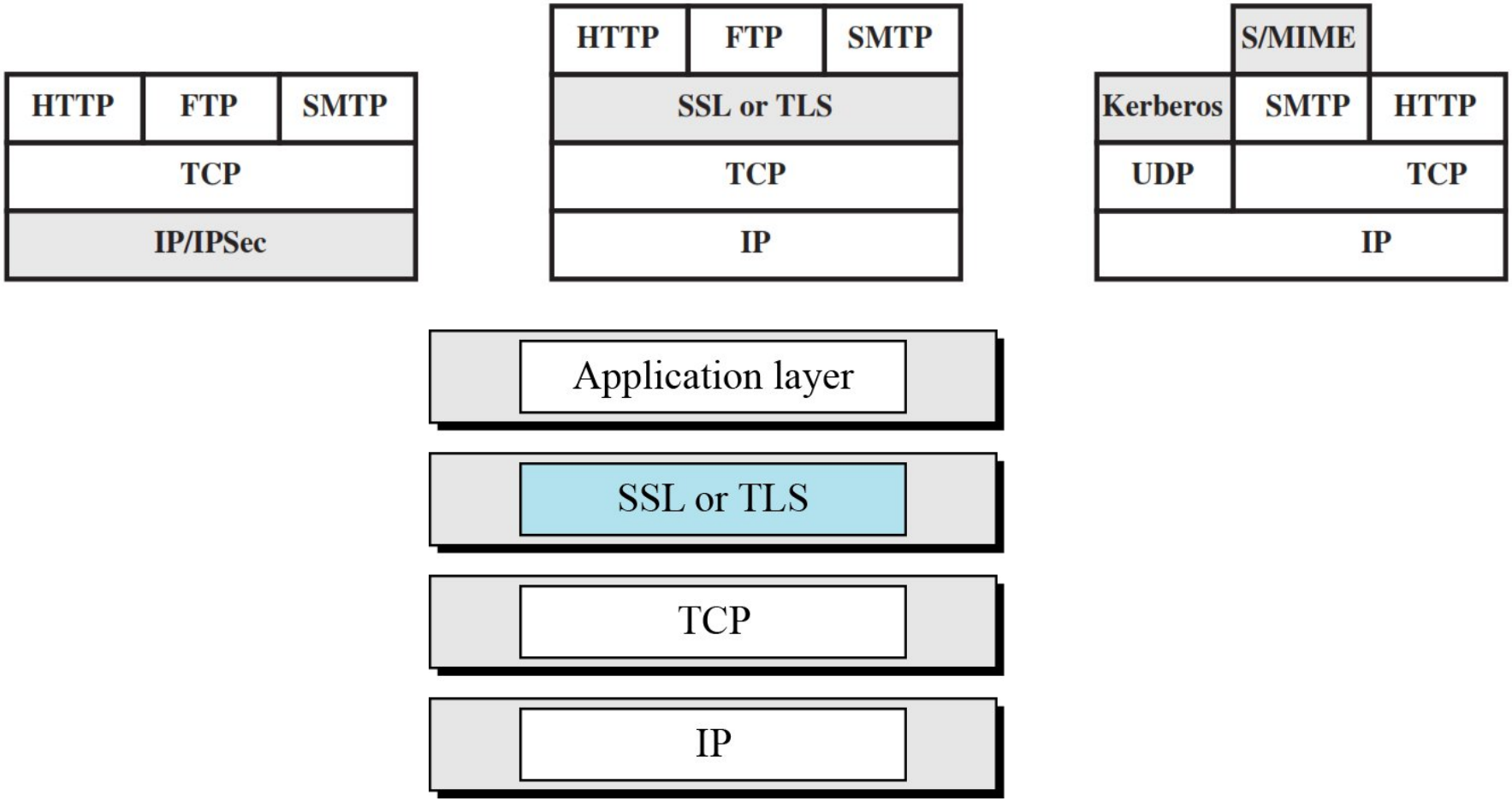

Secure Socket Layer (SSL) Architecture

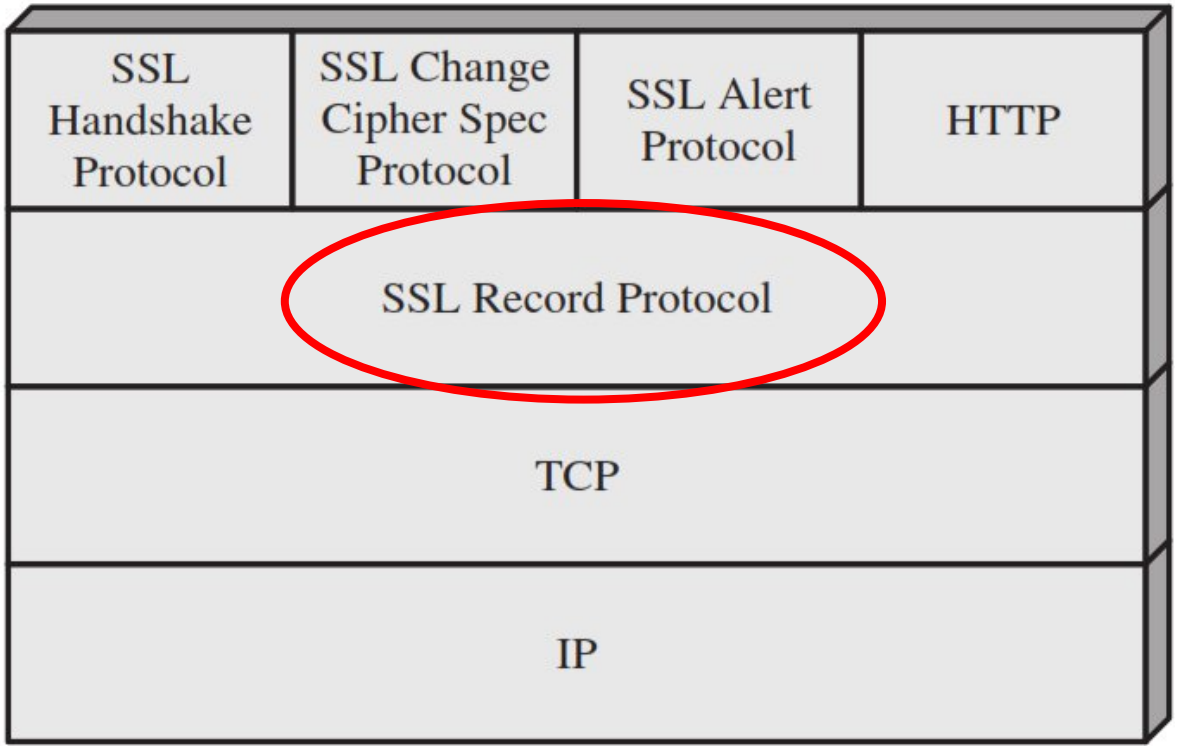

Four SSL Protocols

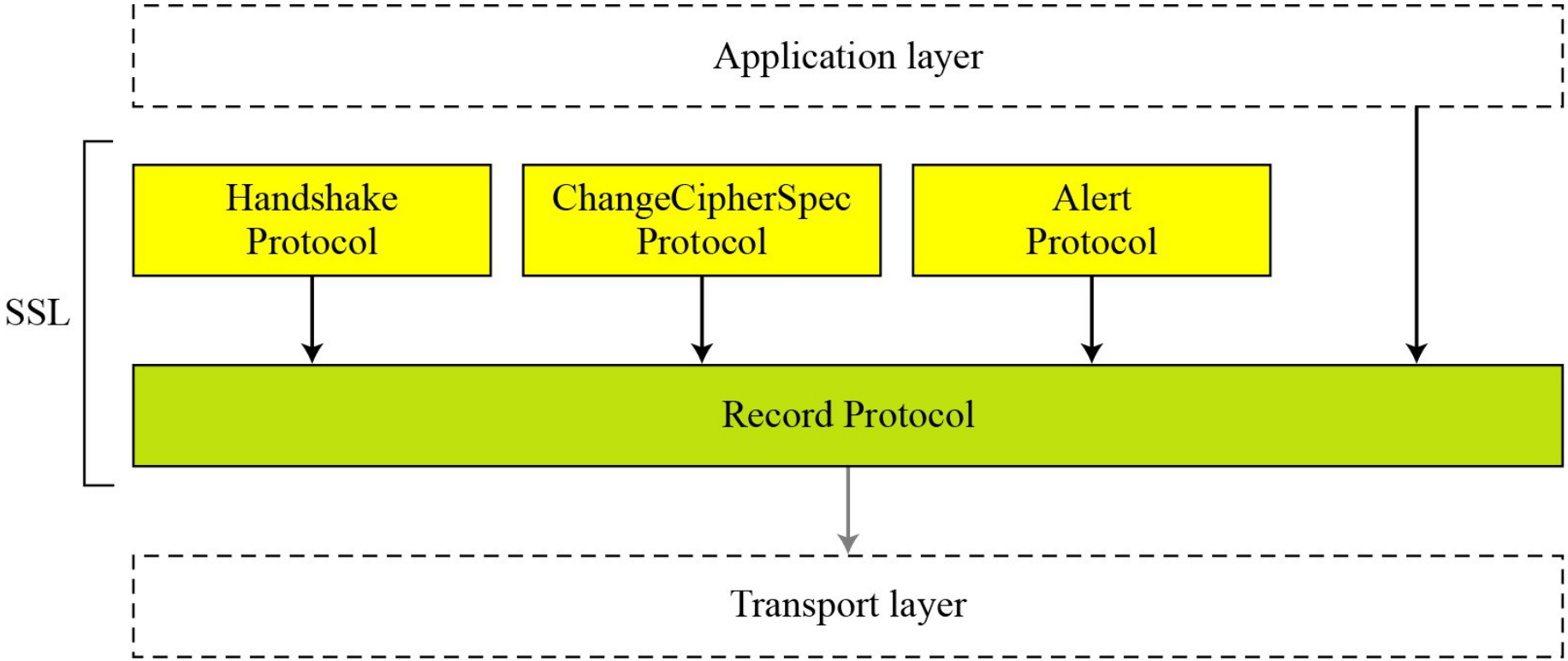

SSL Record Protocol

- It provides two services for SSL connections
- **Confidentiality:** The Handshake Protocol defines a shared secret key that is used for conventional encryption of SSL payloads.
- **Message Integrity:** The Handshake Protocol also defines a shared secret key that is used to form a message authentication code (MAC).

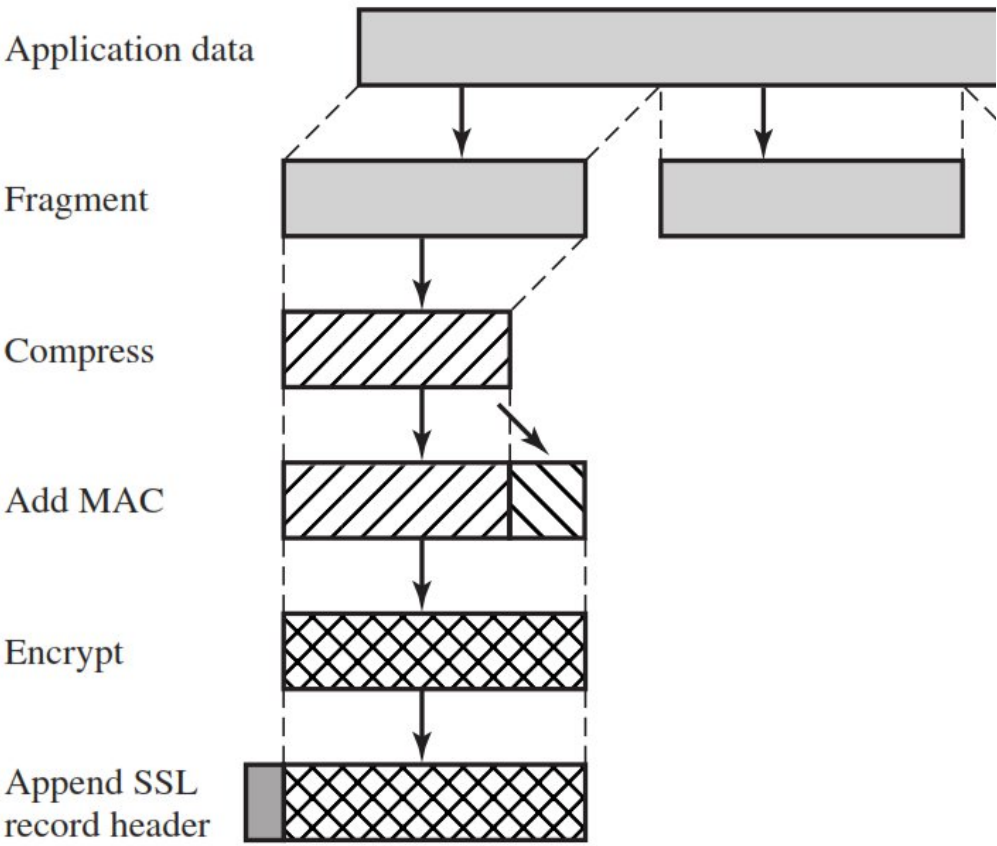

- The **Record Protocol** takes an application message to be transmitted, fragments the data into manageable blocks, optionally compresses the data, applies a MAC, encrypts, adds a header, and transmits the resulting unit in a TCP segment.
- Received data are decrypted, verified, decompressed, and reassembled before being delivered to higher-level users.

Change Cipher Spec Protocol

- The **Change Cipher Spec Protocol** is one of the three SSL-specific protocols that use the SSL Record Protocol, and it is the simplest.
- This protocol consists of a **single message** which consists of a single byte with the **value 1**.
- The sole purpose of this message is to cause the pending state to be copied into the current state, which updates the cipher suite to be used on this connection.

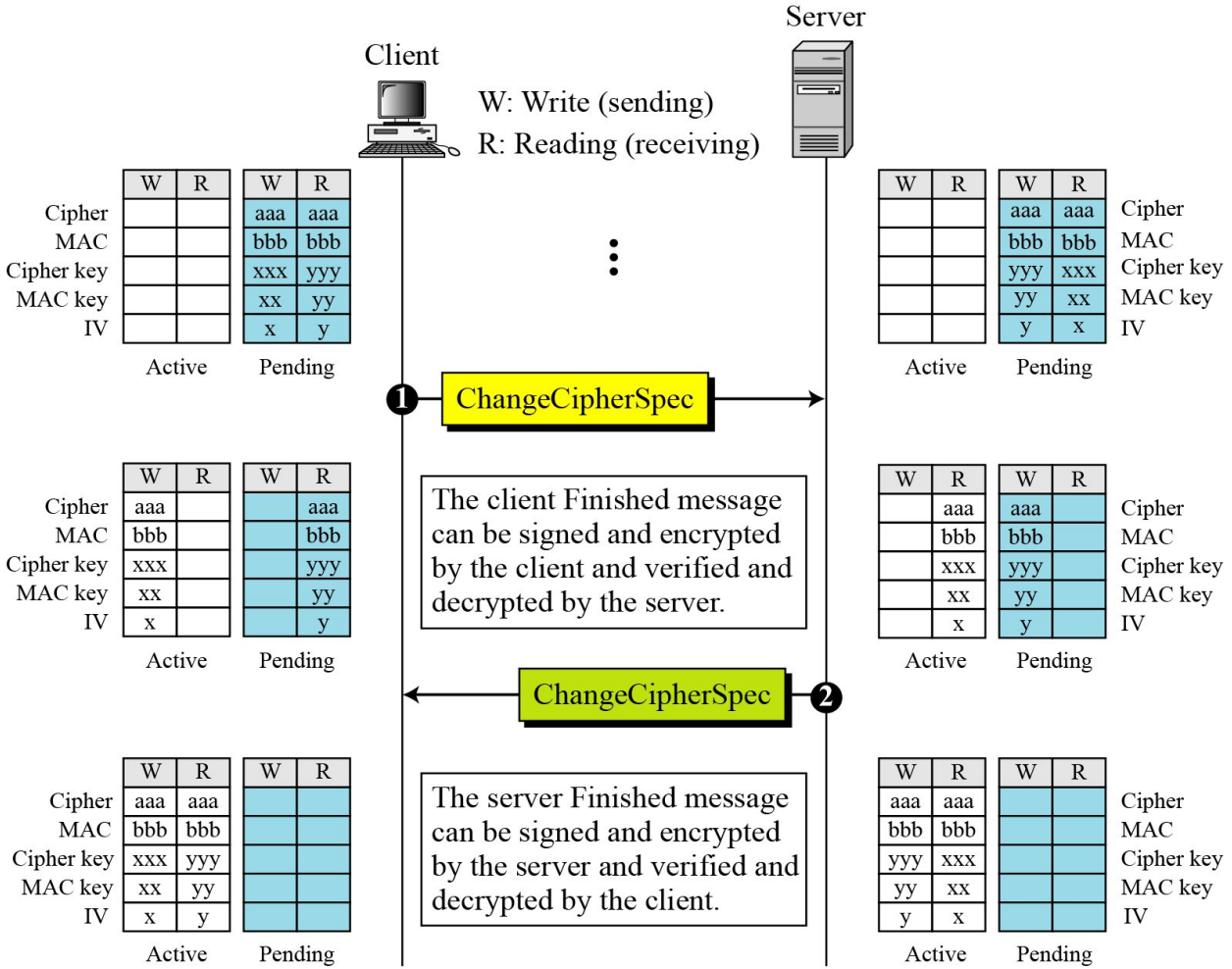
Client
Server
W: Write (sending)
R: Reading (receiving)
Cipher
MAC
Cipher key
MAC key
IV
Active
Pending
ChangeCipherSpec
The client Finished message can be signed and encrypted by the client and verified and decrypted by the server.
ChangeCipherSpec
The server Finished message can be signed and encrypted by the server and verified and decrypted by the client.

Alert Protocol

- The **Alert Protocol** is used to convey SSL-related alerts to the peer entity. As with other applications that use SSL, alert messages are compressed and encrypted, as specified by the current state.

Value	*Description*	*Meaning*
0	*CloseNotify*	Sender will not send any more messages.
10	*UnexpectedMessage*	An inappropriate message received.
20	*BadRecordMAC*	An incorrect MAC received.
30	*DecompressionFailure*	Unable to decompress appropriately.
40	*HandshakeFailure*	Sender unable to finalize the handshake.
41	*NoCertificate*	Client has no certificate to send.
42	*BadCertificate*	Received certificate corrupted.
43	*UnsupportedCertificate*	Type of received certificate is not supported.
44	*CertificateRevoked*	Signer has revoked the certificate.
45	*CertificateExpired*	Certificate expired.
46	*CertificateUnknown*	Certificate unknown.
47	*IllegalParameter*	An out-of-range or inconsistent field.

Handshake Protocol

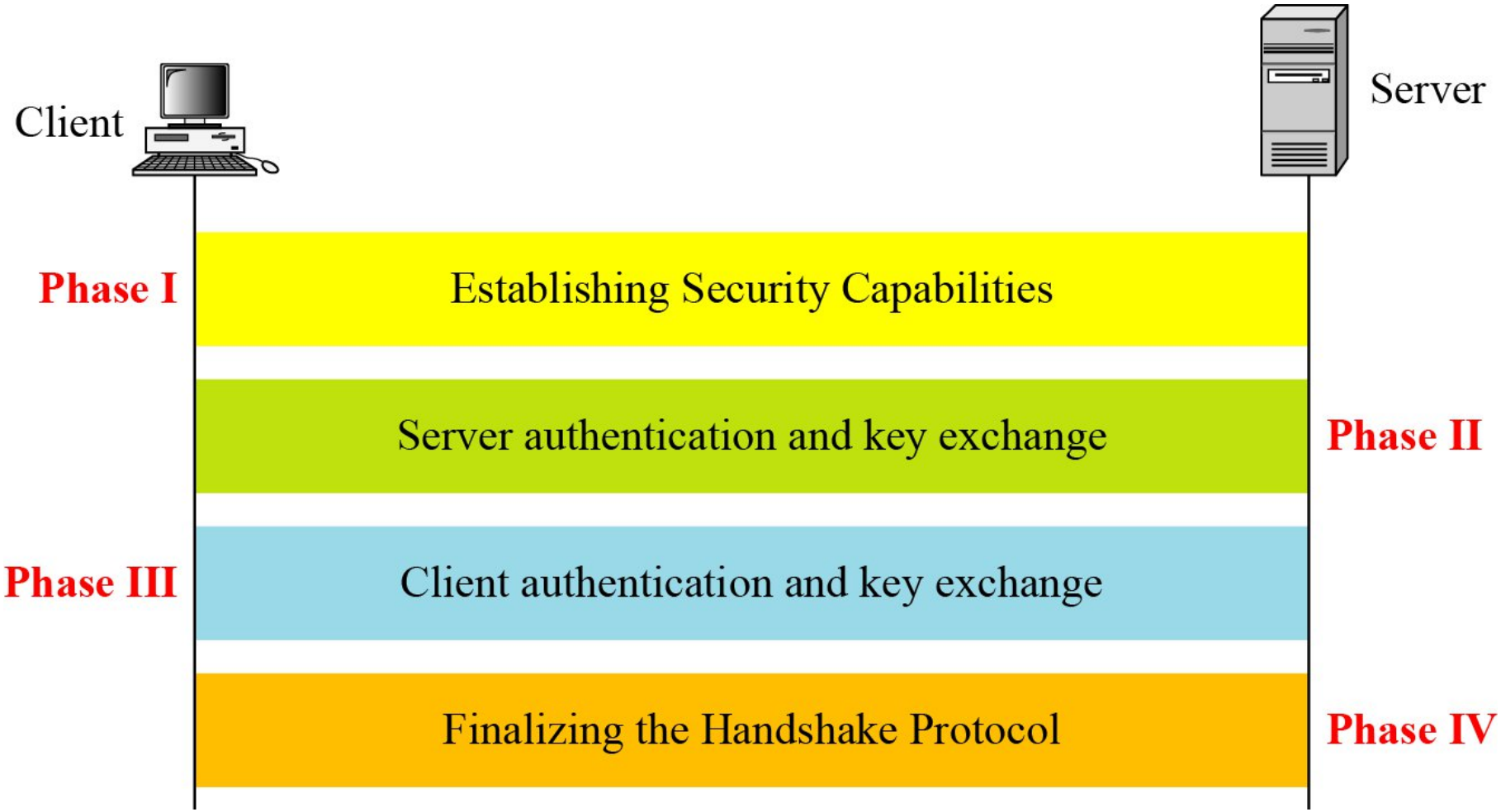

Handshake Protocol – Phase I

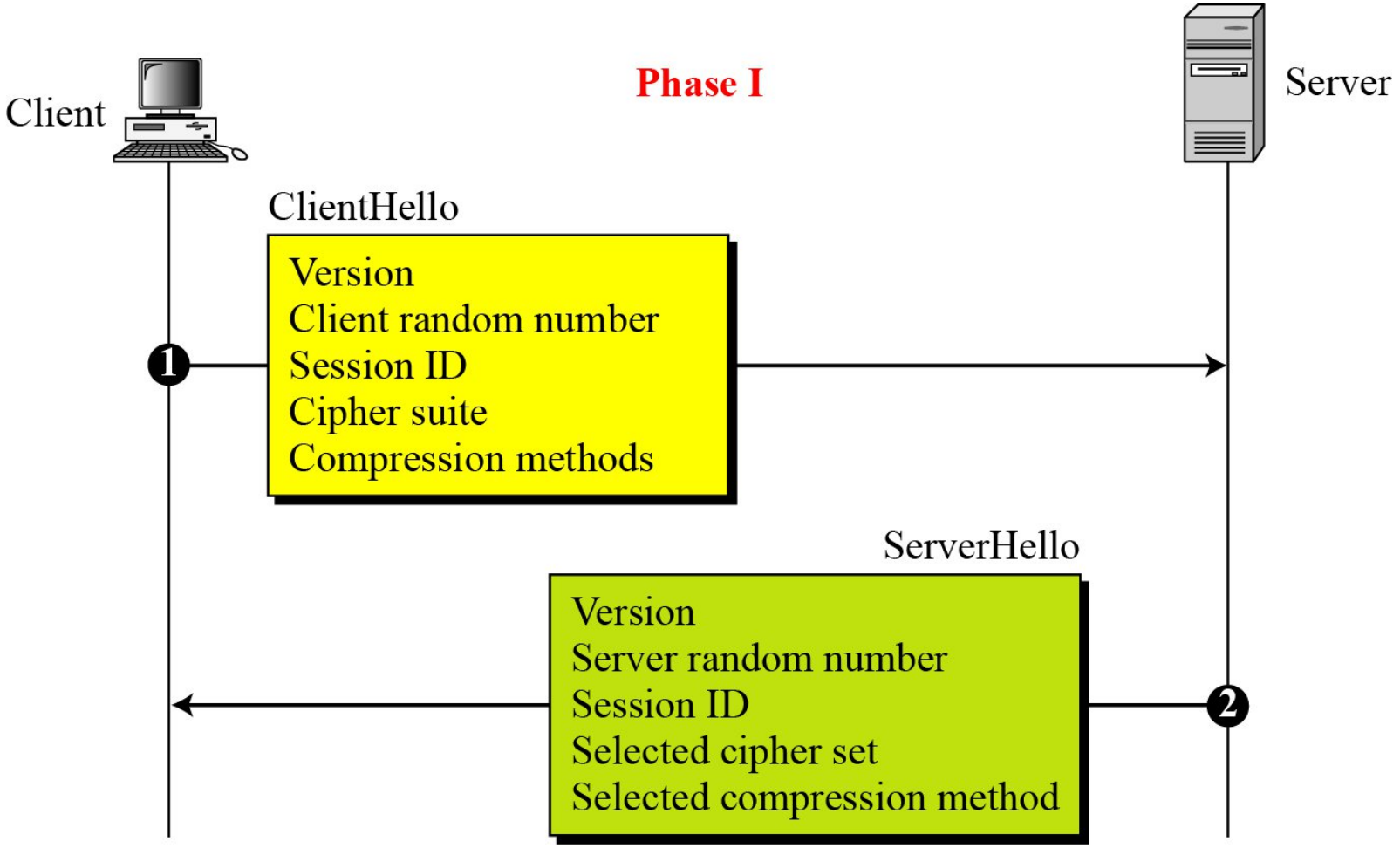

After Phase I, the client and server know the following:

- The **version** of SSL
- The **algorithms** for key exchange, message authentication, and encryption
- The **compression method**
- The two **random numbers** for key generation

Handshake Protocol – Phase II

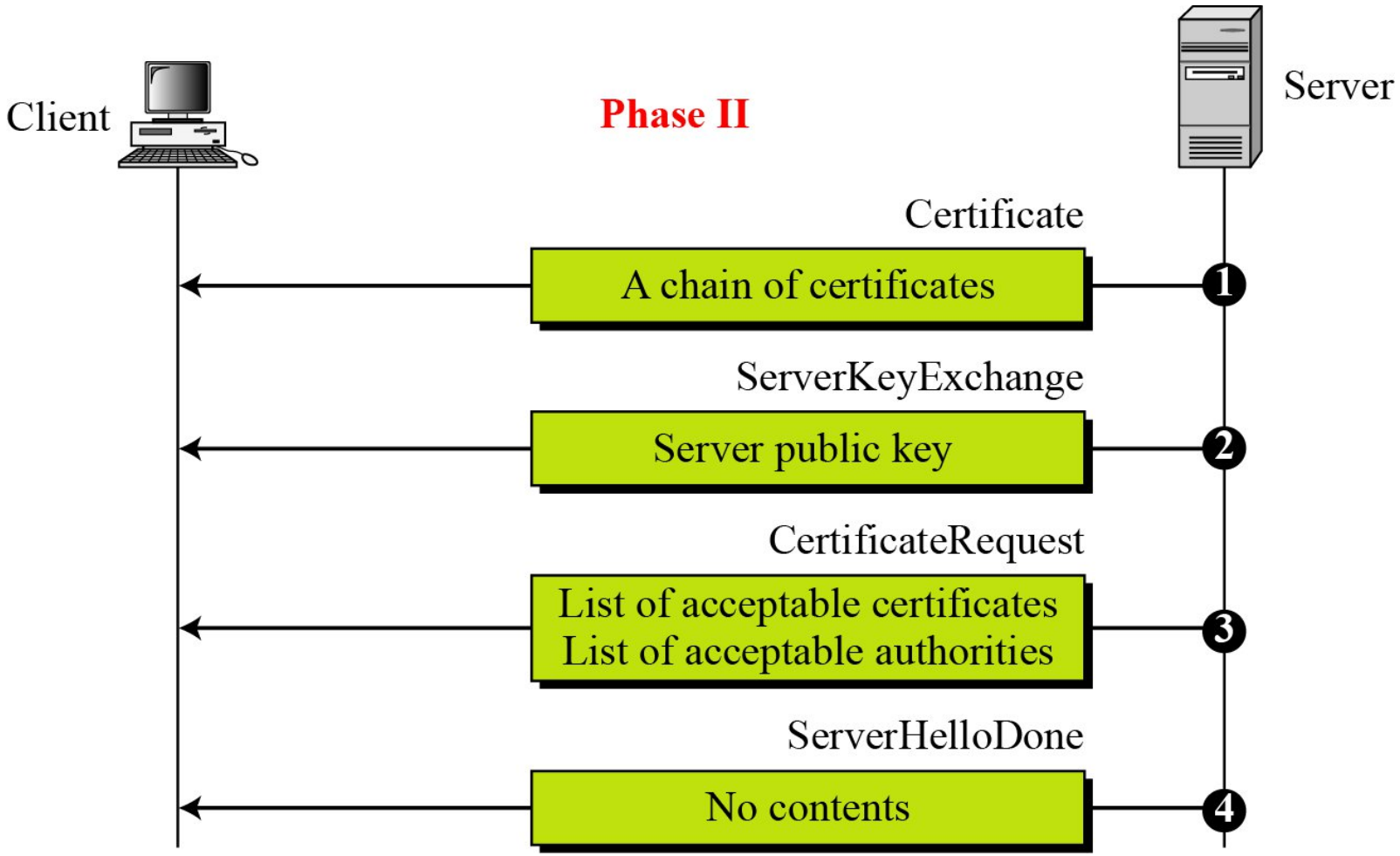

After Phase II

- The server is authenticated to the client.
- The client knows the public key of the server if required.

Handshake Protocol – Phase III

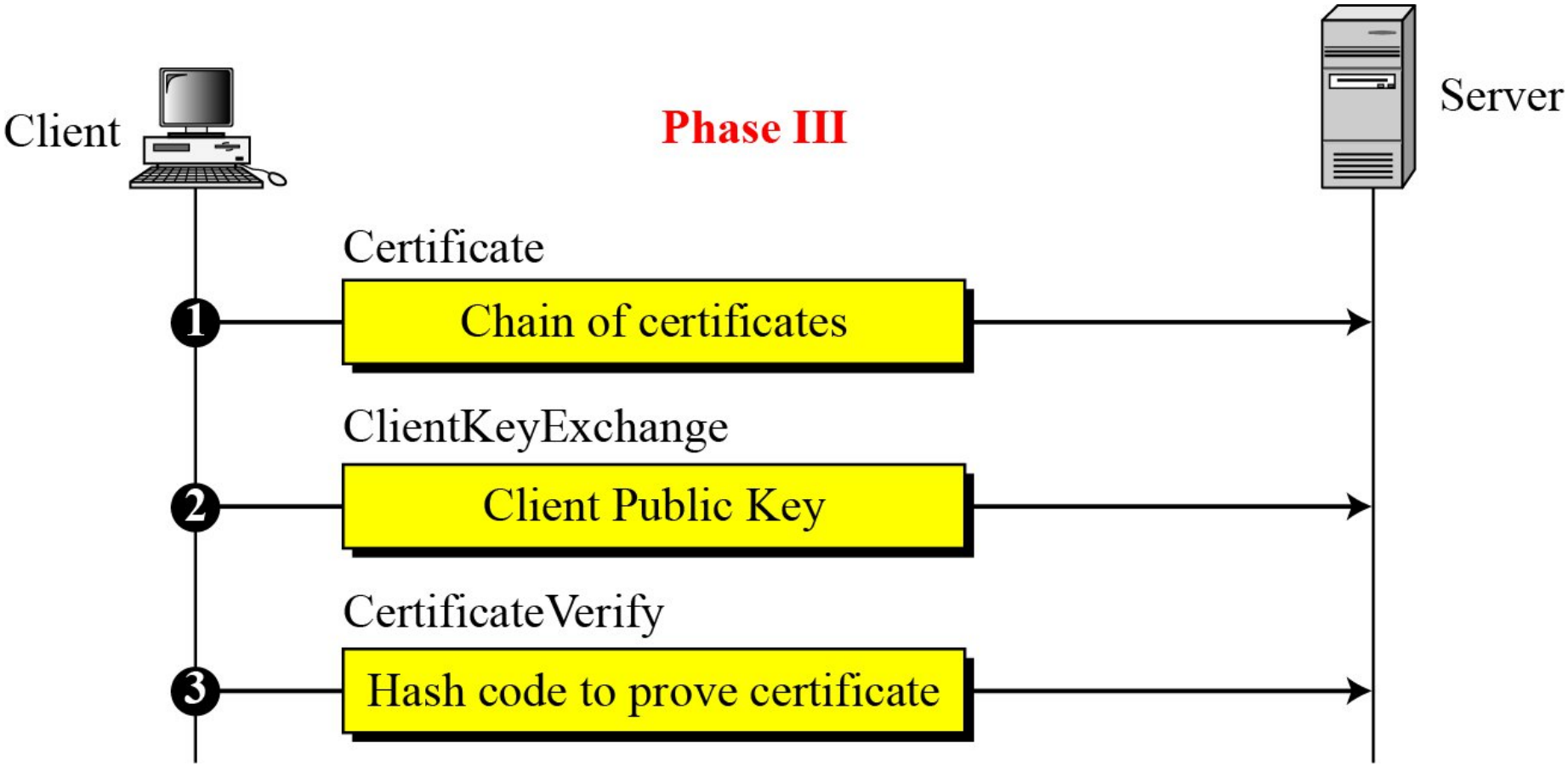

Handshake Protocol – Phase IV

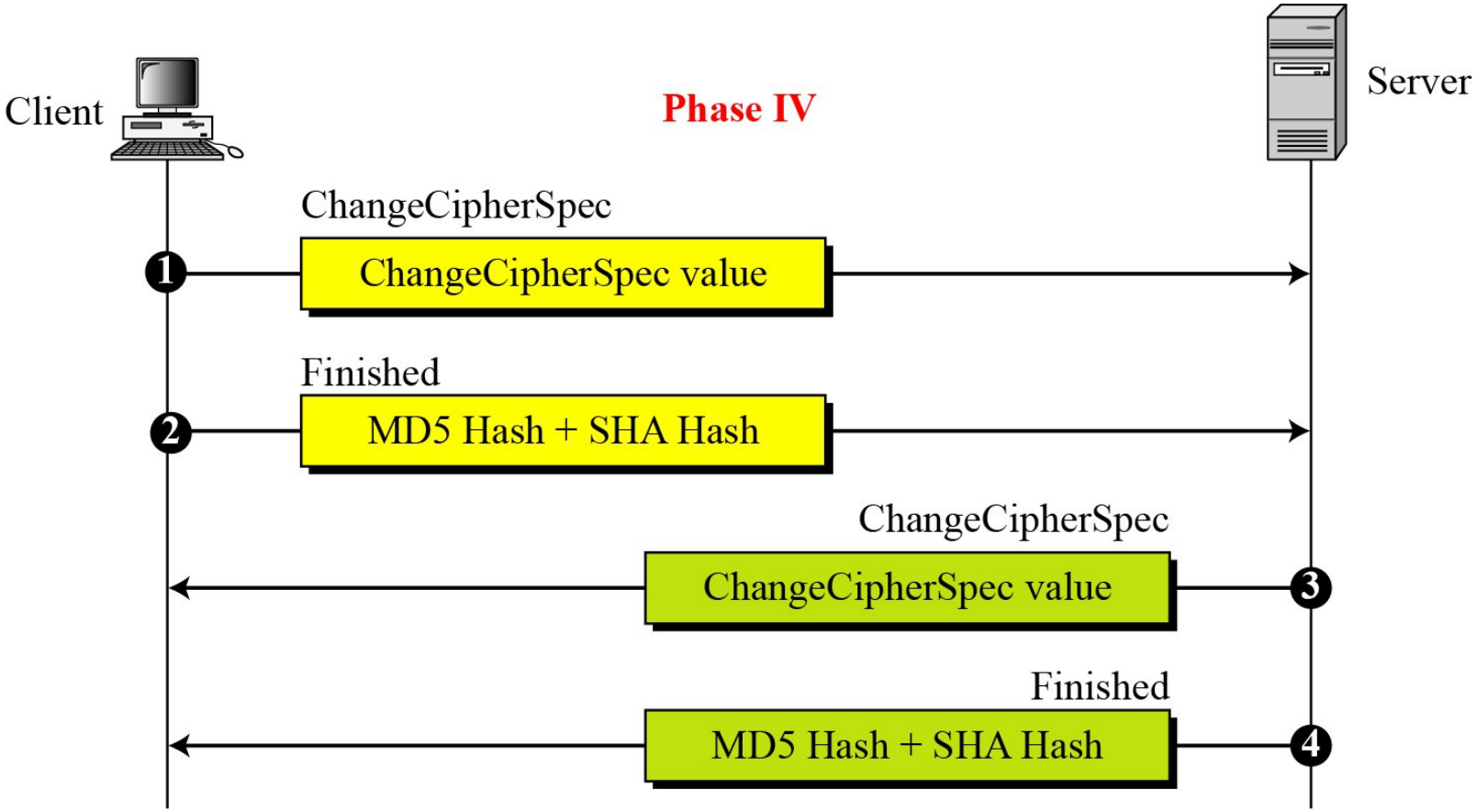
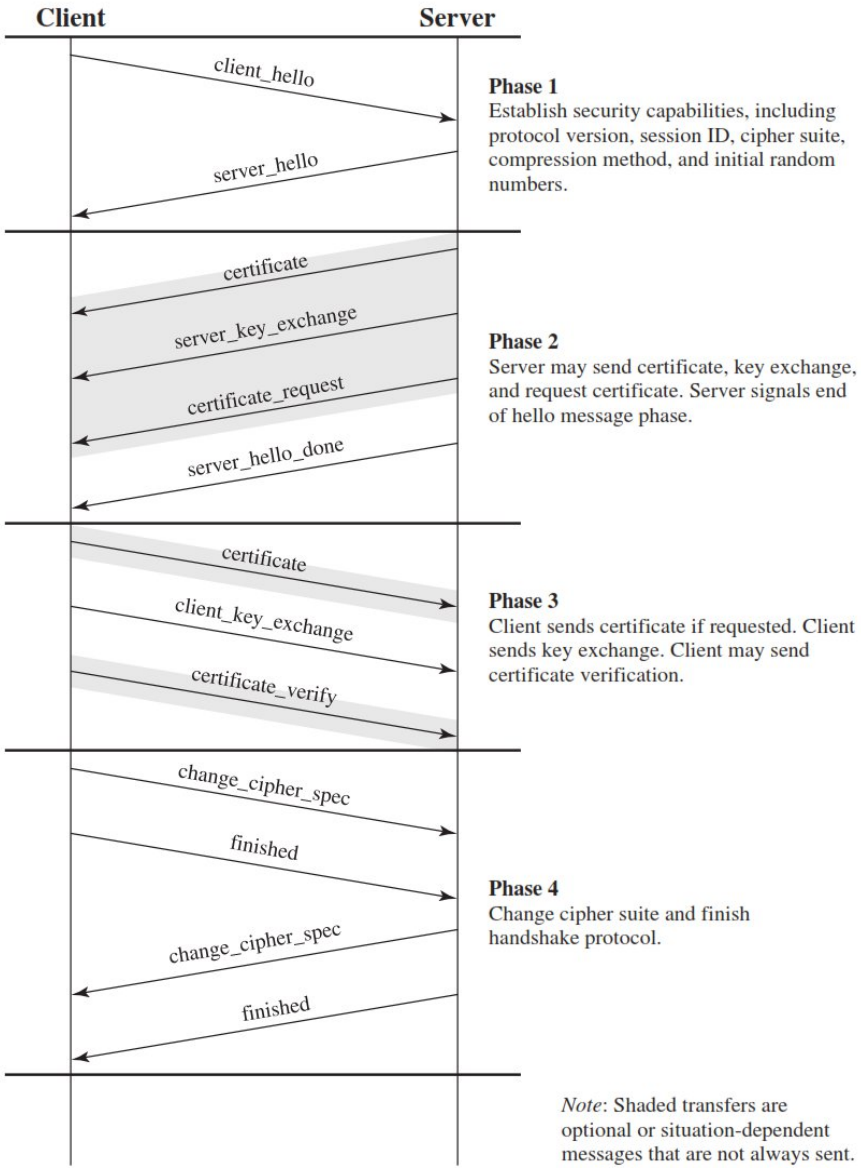
SSL Handshake Protocol Phases