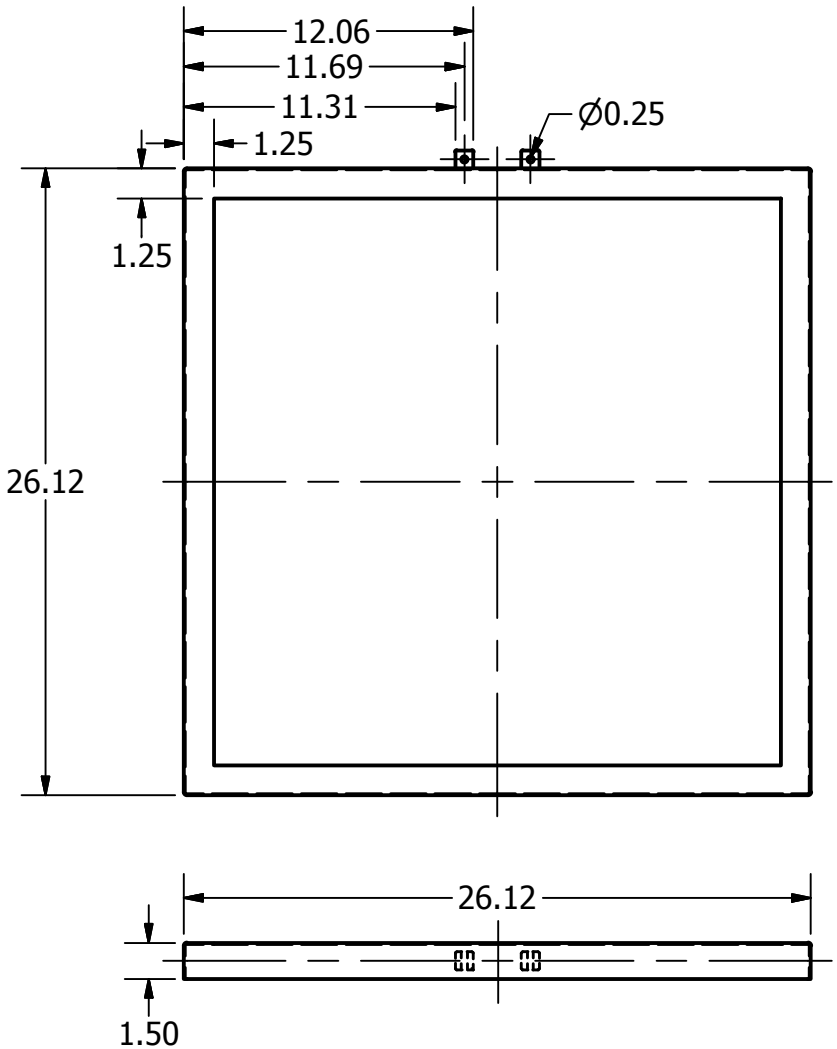

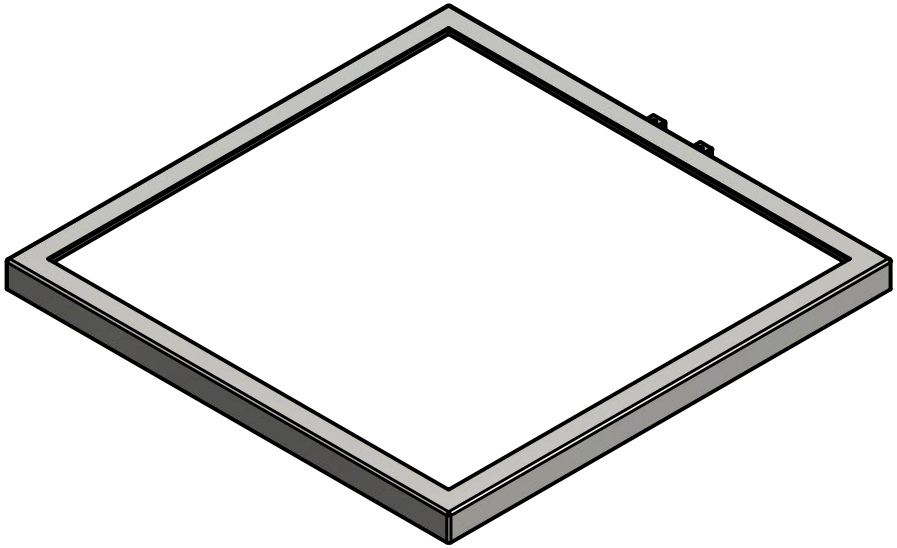

DRAWN	8/25/2016	
CHECKED		
UNITS in.	X.XX	TITLE **Burner Lid** (Composed of 1/16" thick steel)
MFG		
APPROVED		
		SIZE A / DWG NO Part #2 / REV
		SCALE 1/8