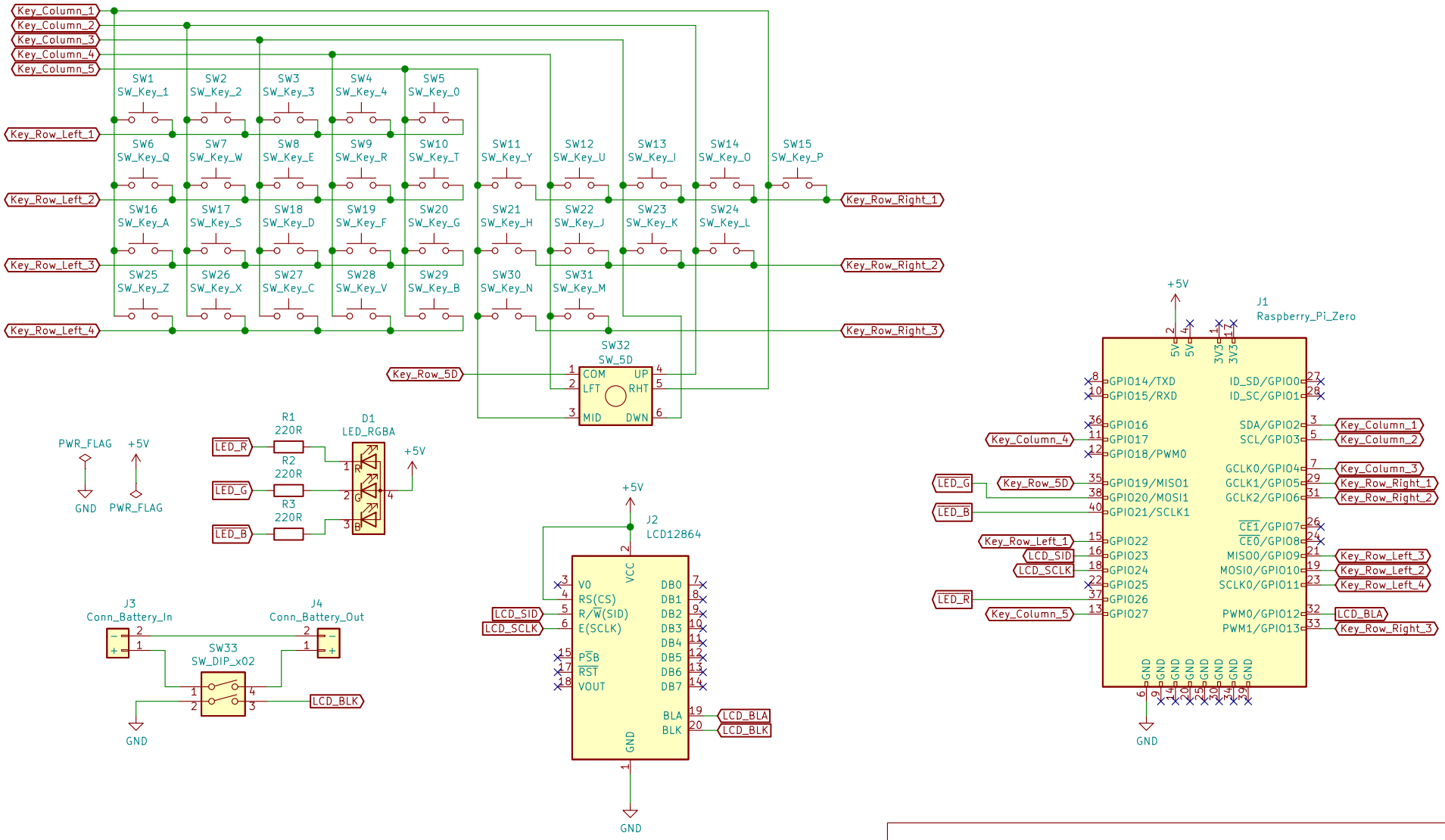

Copyright © NKID00 2020–2021

NK_PortableMultifunctionalDevice00

NKID00

Sheet: /

File: pmd00.sch

Title: NK_PMD00

Size: A4	Date: 2021-02-13	**Rev: 3b**
KiCad E.D.A. kicad (5.1.7)-1		Id: 1/1