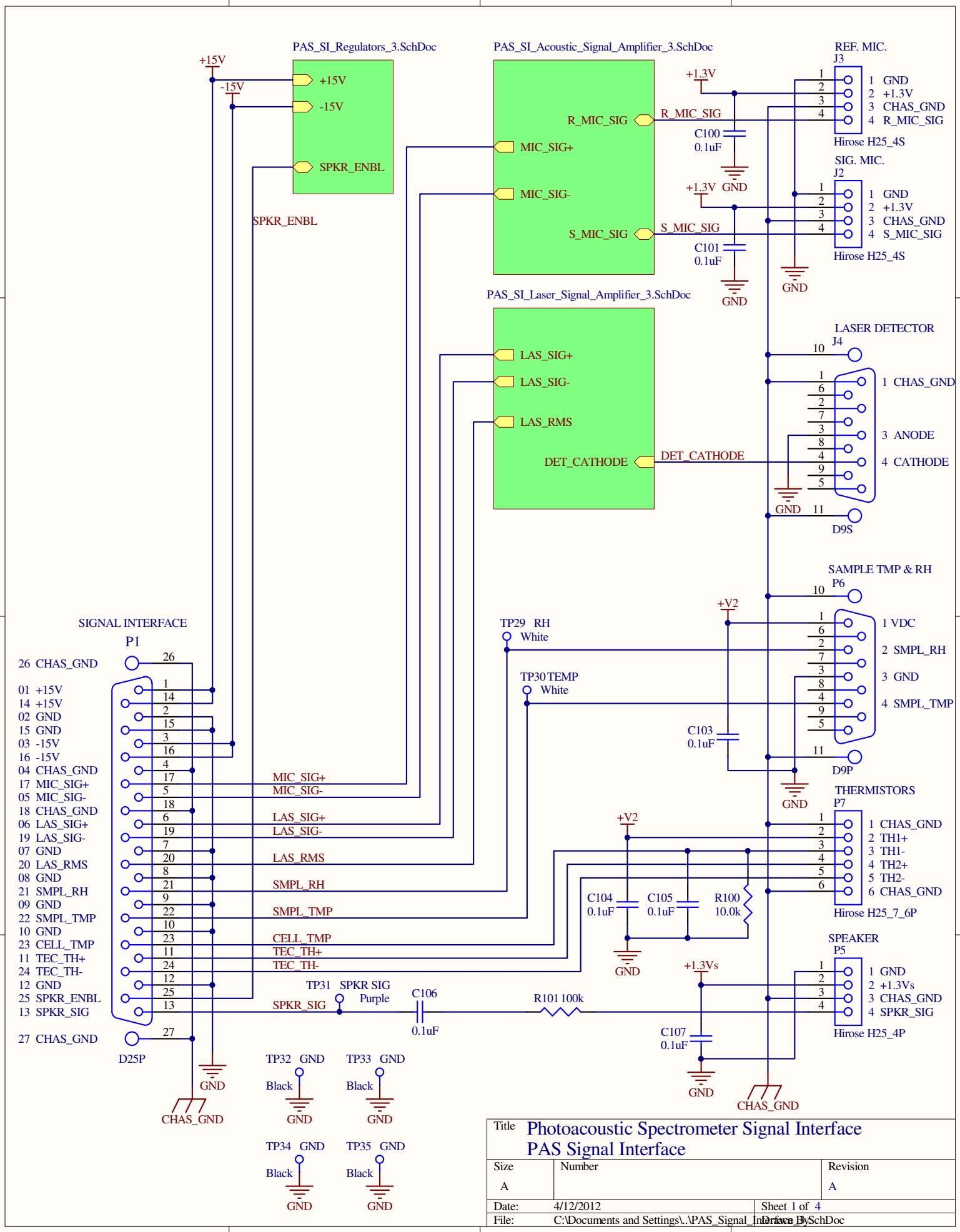

Title	Photoacoustic Spectrometer Signal Interface PAS Signal Interface	
Size A	Number	Revision A
Date: 4/12/2012		Sheet 1 of 4
File: C:\Documents and Settings\..\PAS_Signal_Interface.SchDoc		Drawn By: