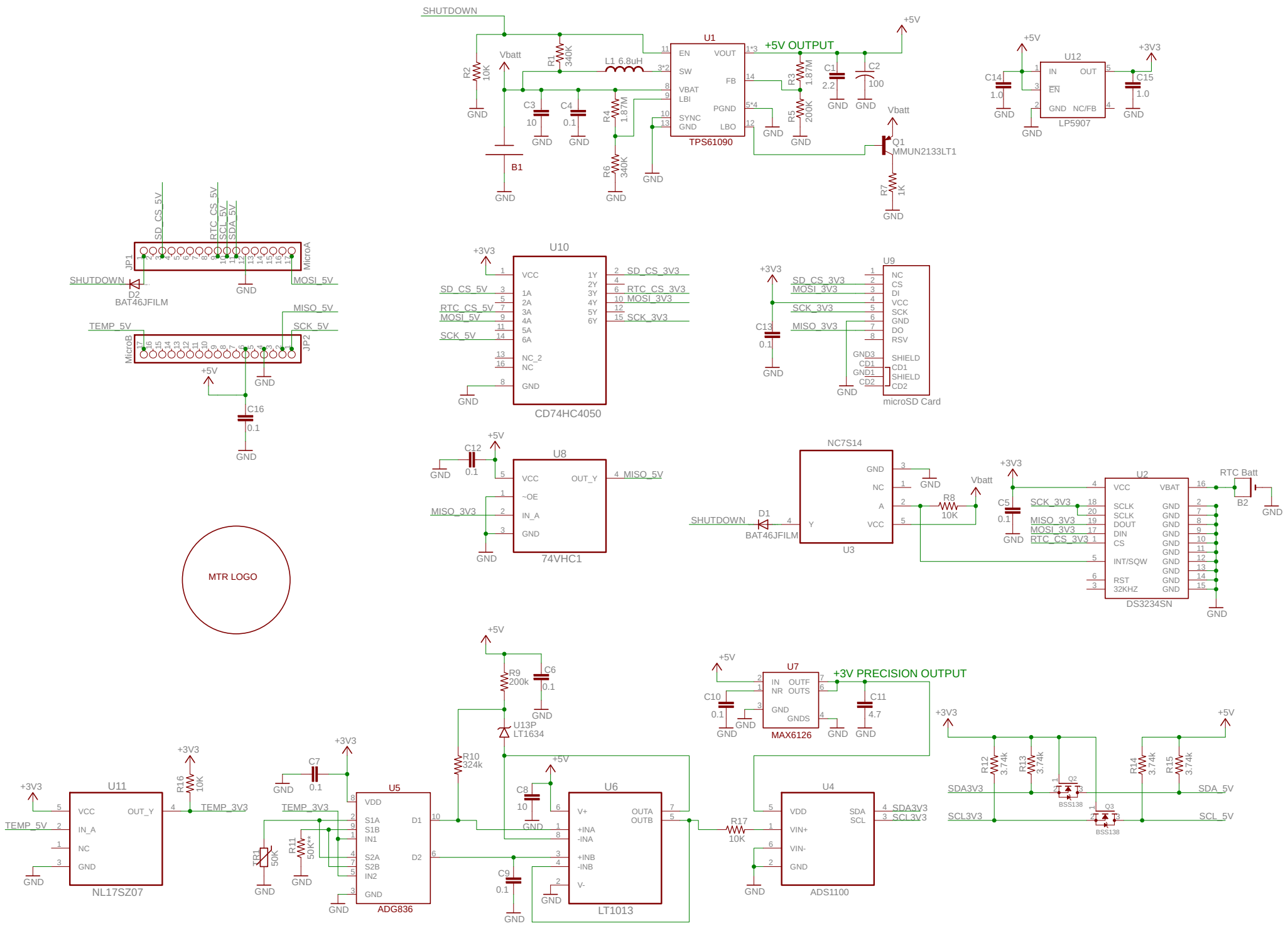

1/4/2018 8:37:49 AM f=0.77 C:\Users\langis\Documents\eagle\MTRDuino\rev5.2\MTRduino_rev5.2.sch (Sheet: 1/1)