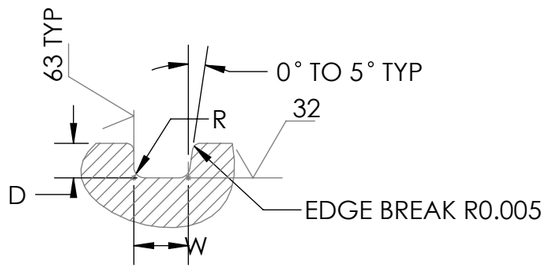

O-RING GLAND DETAIL

O-RING PART NUMBER- 2-118
GLAND BOTTOM RADIUS (R)- 0.010 +/-.005
GLAND WIDTH (W)- 0.140 +/-.003
GLAND DEPTH (D)- 0.080 +/-.001

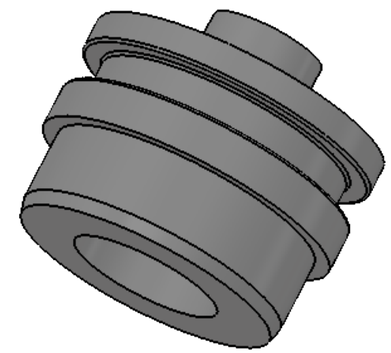

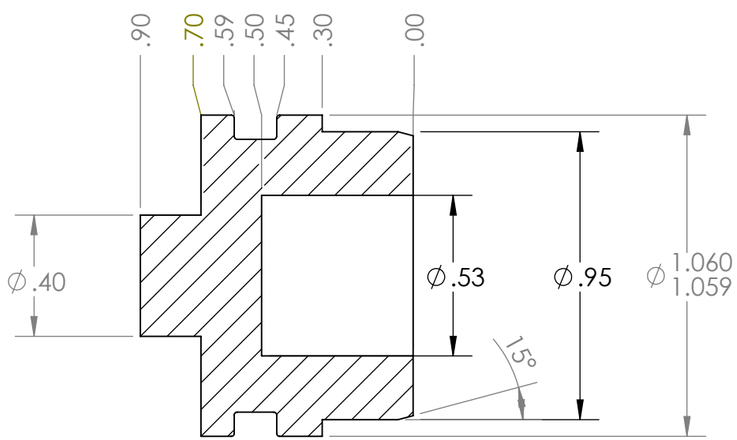

SECTION G-G

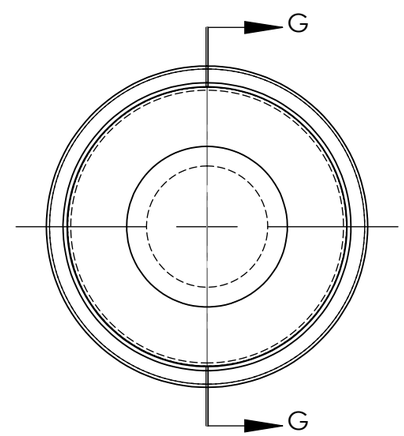

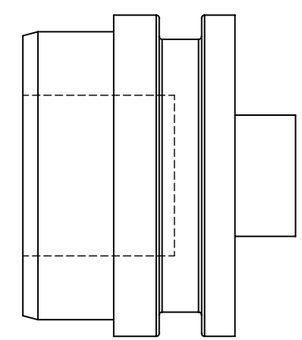

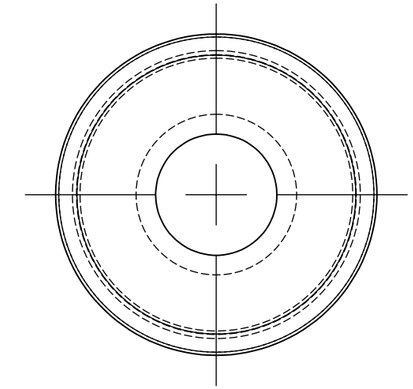

Part Name:
{FOCI}{PopUp}{VacuumPortCap}{1}

Notes:
1. Material is Ertalyte PET-P Plastic
2. Qty Needed: 1/Assembly
3. Surface finish:

UNLESS OTHERWISE SPECIFIED

NO MODIFICATION OF SPECIFIED DIMENSIONS OR MATERIALS IS ALLOWED UNLESS APPROVED BY NOAA ENGINEERS.

BREAK SHARP EDGES 0.005 MIN
MACHINED FILLETS 0.015 MAX

SURFACE FINISH 125

DO NOT SCALE DRAWING

DIMENSIONS ARE IN INCHES
TOLERANCES ARE:
ANGLES ±1°
FRACTIONS ±1/16
DECIMALS .X ±0.05
.XX ±0.02
.XXX ±0.005

THIRD ANGLE PROJECTION

DRAWN DPL	DATE 06/13/16
CHECKED CM	DATE 6/23/16

NOAA-PMEL
Engineering Division
7600 Sand Point Wy NE
Seattle, WA 98115
206-526-6800

PROJECT: Pop Up R1

SHEET NAME: Plug for Vacuum Port

PLOT DATE: 1/4/2018

CAD FILE: **{FOCI}{PopUp}{VacuumPortCap}{1}**

SHEET 1 OF 1