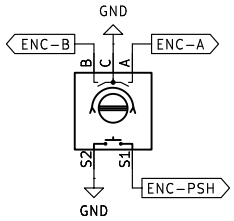

SW1
RotaryEncoder_Switch

ENCODER

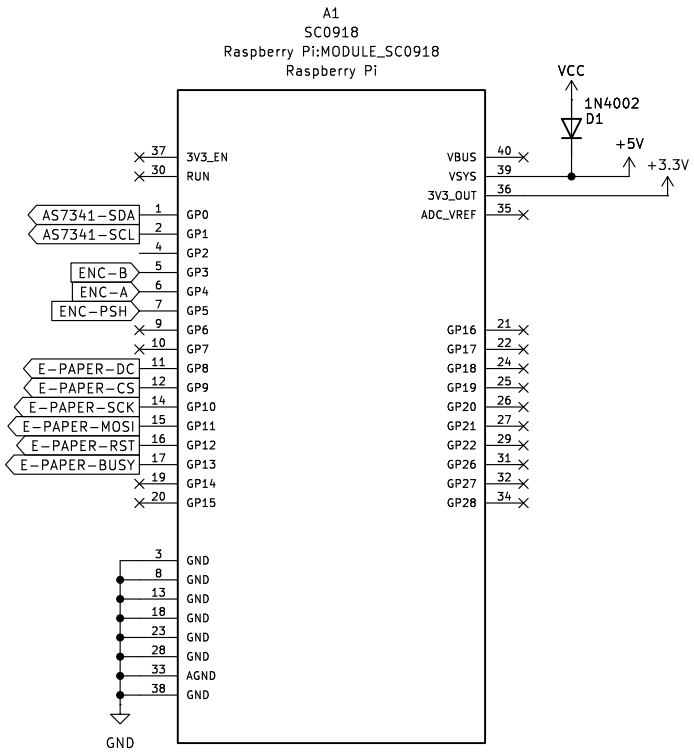

MCU

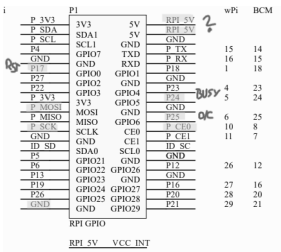

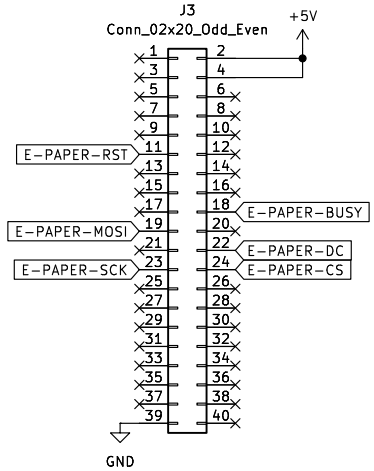

E-PAPER SCREEN

SENSOR DEV BOARD

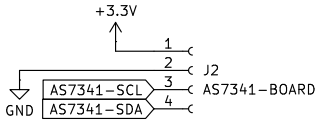

BATTERY CHARGE/BOOST OUTPUT

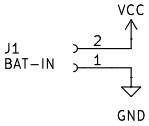

Drawn by Nicolas Viale

Sheet: /
File: DST-MotherBoard.kicad_sch

Title: DST - Spectrometer MotherBoard

Size: A4	Date: 2025-02-27	**Rev: v1**
KiCad E.D.A. 8.0.6		Id: 1/1