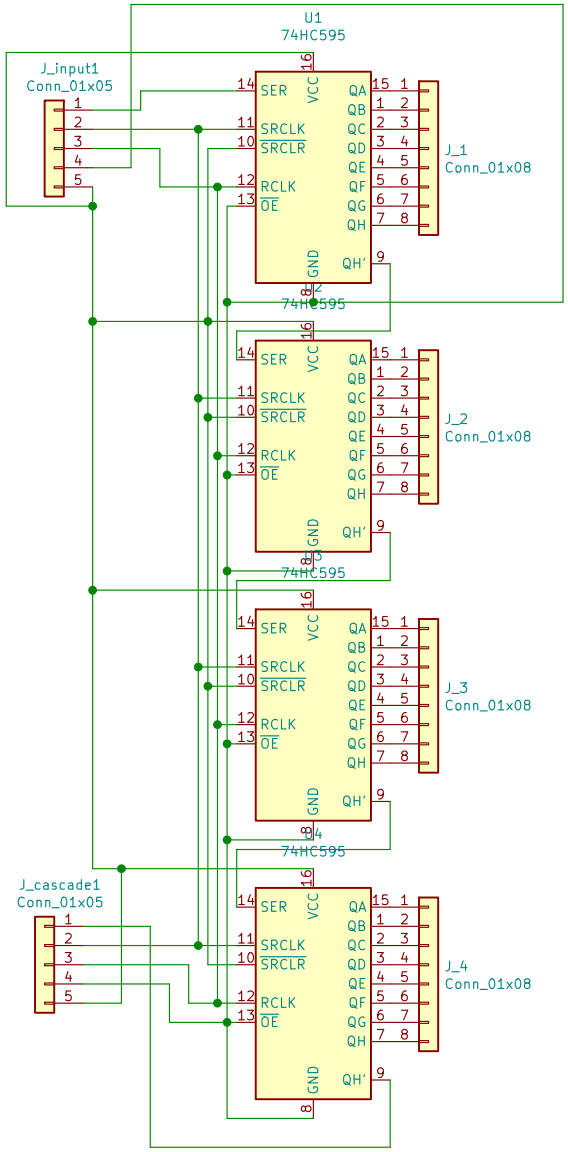
U1
74HC595
J_input1
Conn_01x05
J_1
Conn_01x08
J_2
Conn_01x08
J_3
Conn_01x08
J_4
Conn_01x08
J_cascade1
Conn_01x05
SER
SRCLK
SRCLR
RCLK
OE
VCC
GND
QA
QB
QC
QD
QE
QF
QG
QH
QH'

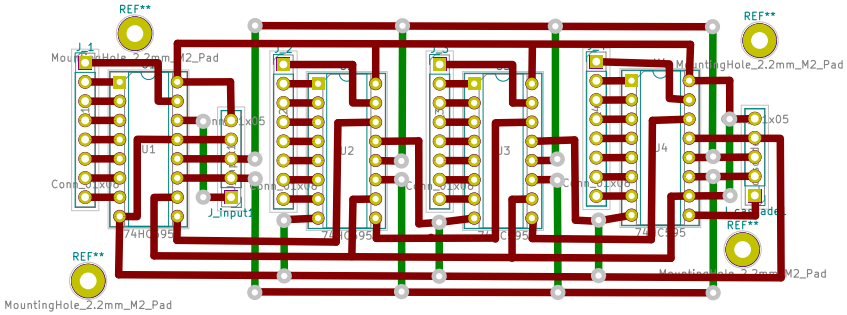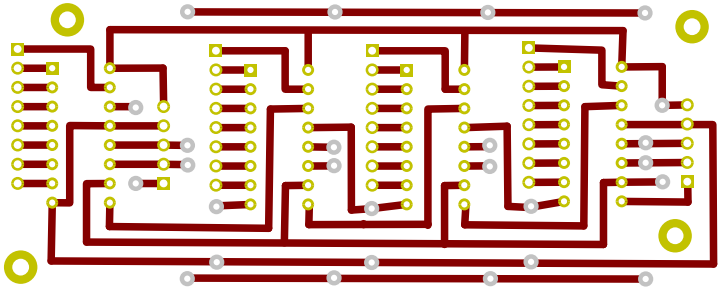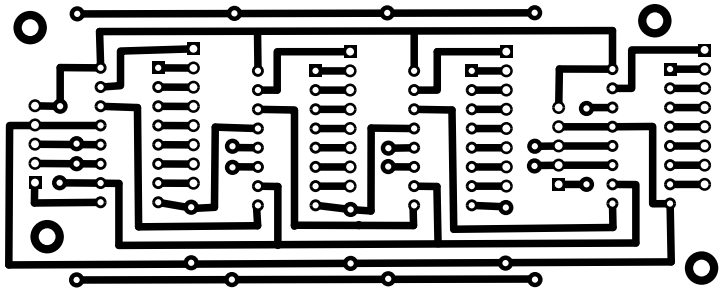
REF**
MountingHole_2.2mm_M2_Pad
J_1
J_2
J_3
J_4
U1
U2
U3
U4
J_input1
74HC595