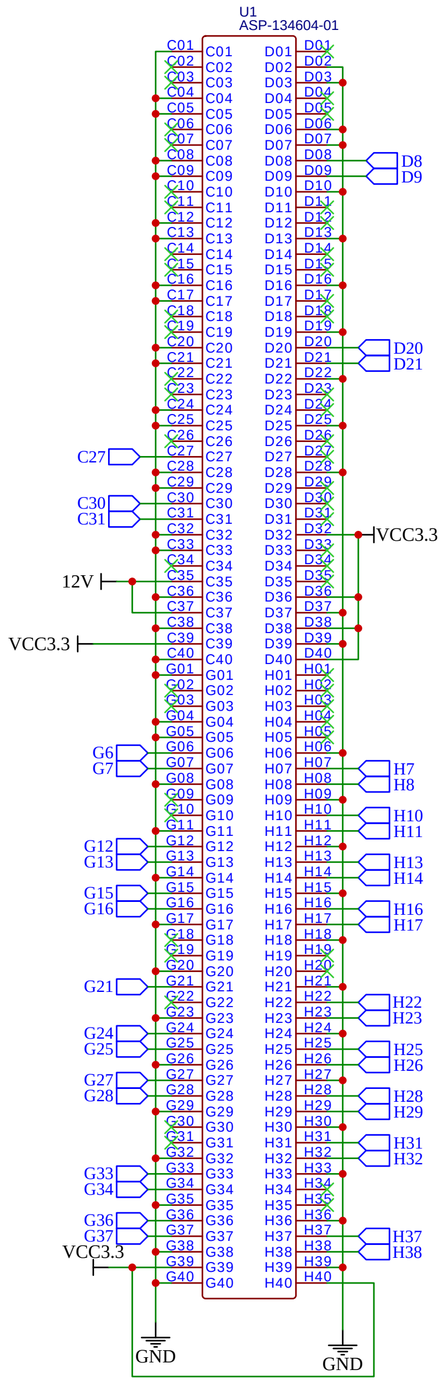

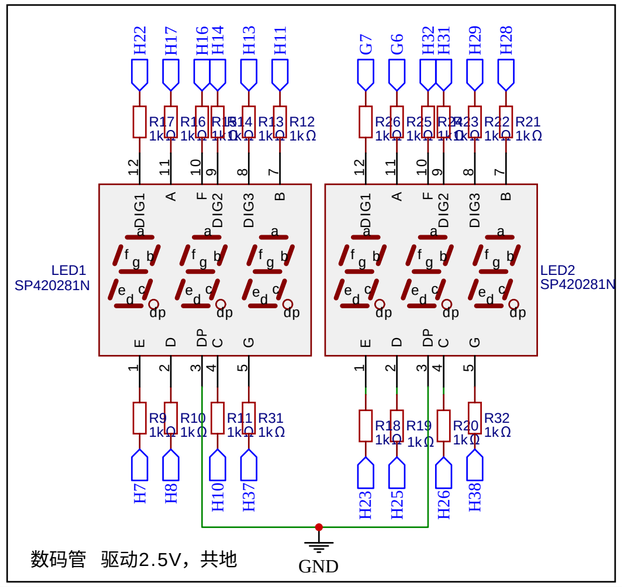

数码管 驱动2.5V，共地

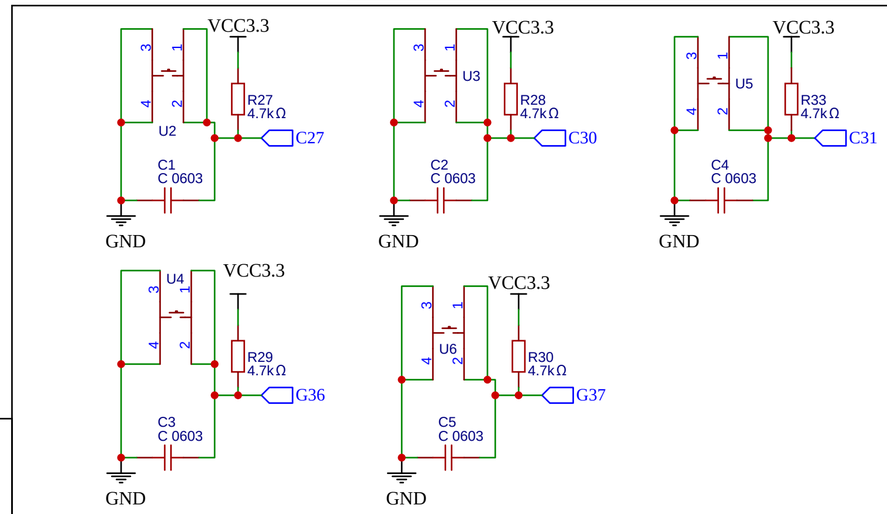

按键阵列

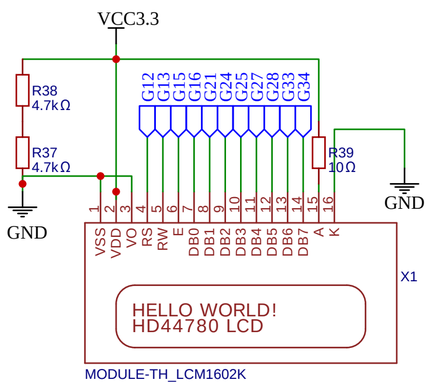

显示屏电路

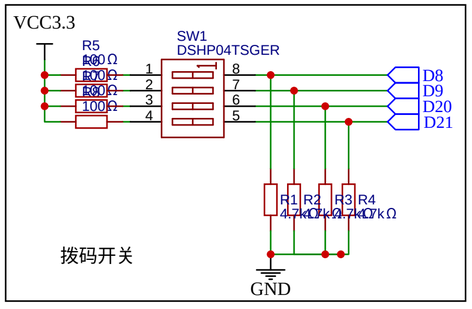

拨码开关

TITLE: Sheet_1		REV: 1.0
	Company: Your Company	Sheet: 1/1
	Date: 2023-07-20 Drawn By: gaojj123	