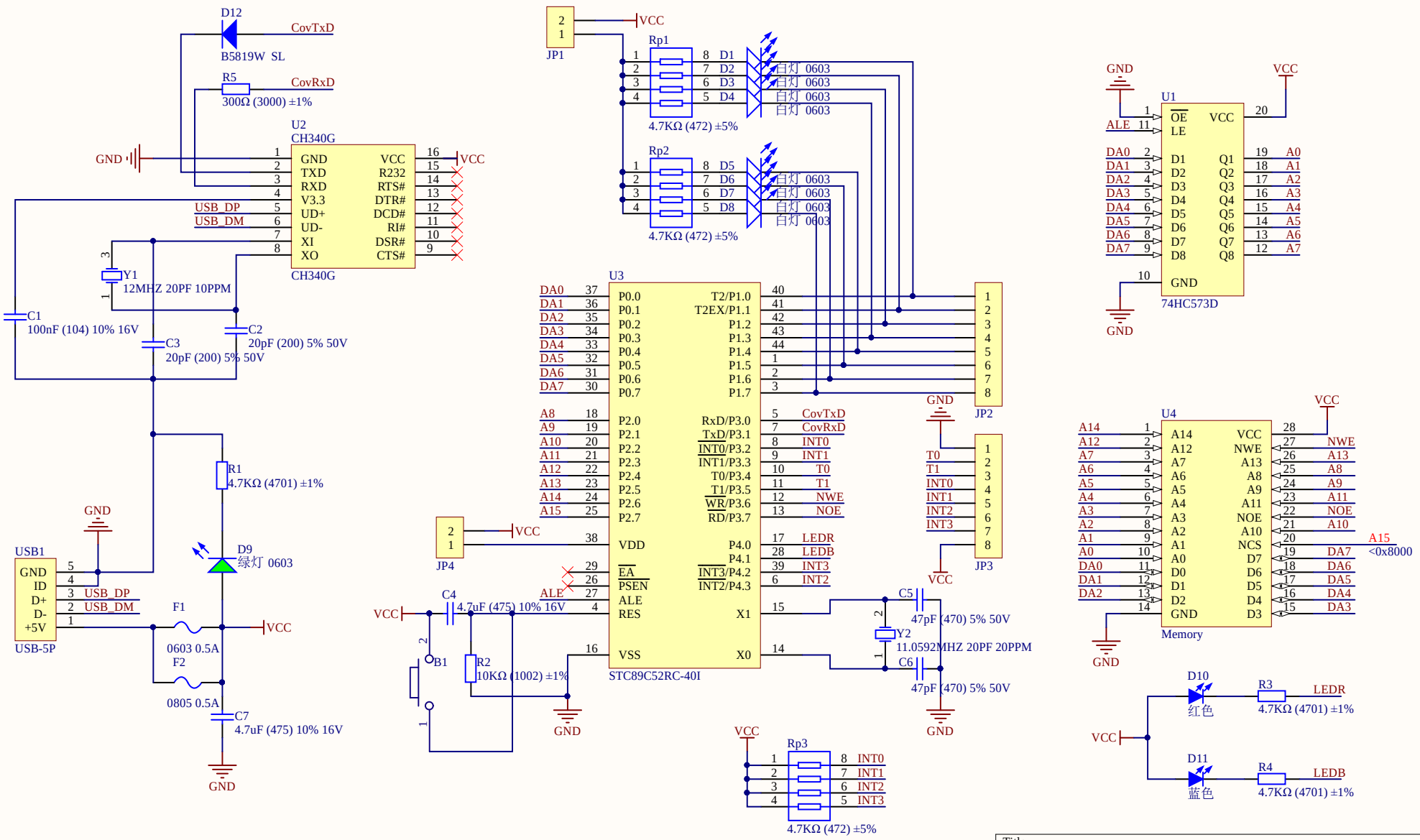

Title		
Size A4	Number	Revision
Date: 2020.10.9		Sheet of
File: E:\Works\NSSTC\NSSTC.SchDoc		Drawn By: