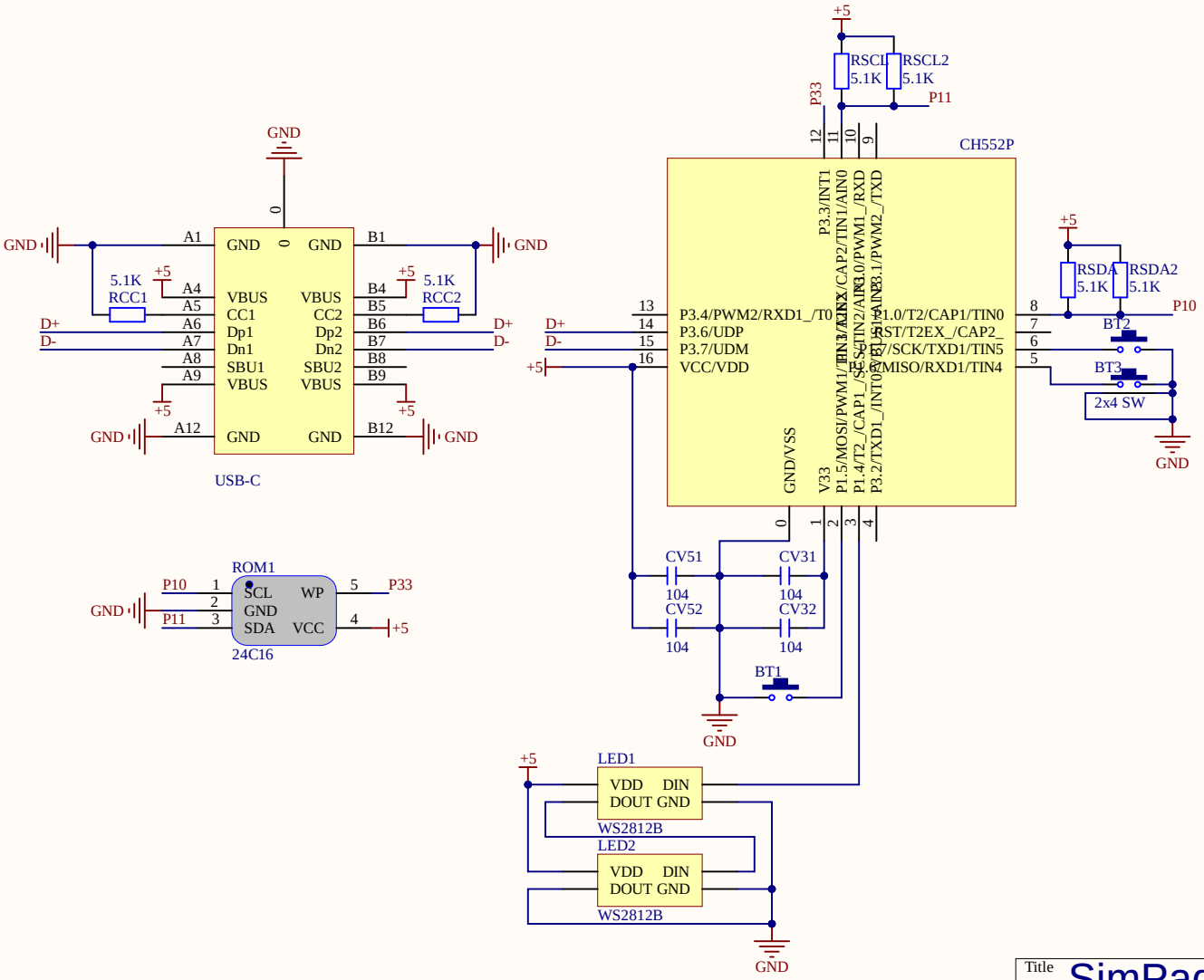

Title	SimPad Nano 周年版	
Size A4	Number	Revision
Date: 7/04/2020		Sheet of
File: E:\WorkSpace\..\SimPadNanoAE-withEEPROM.SchDoc		Drawn By: