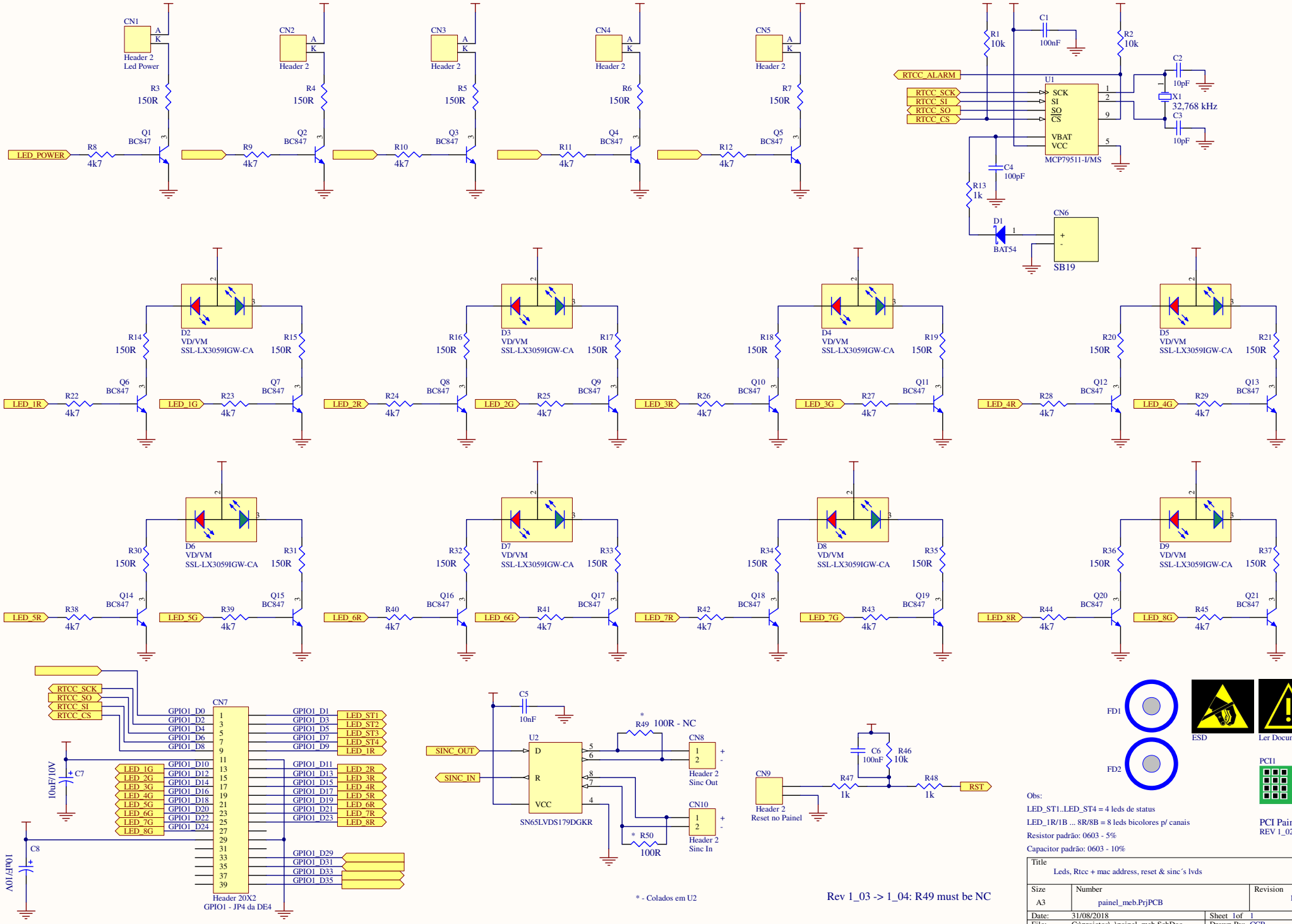
CN1
Header 2
Led Power
CN2
Header 2
CN3
Header 2
CN4
Header 2
CN5
Header 2
R3 150R
R4 150R
R5 150R
R6 150R
R7 150R
Q1 BC847
Q2 BC847
Q3 BC847
Q4 BC847
Q5 BC847
LED_POWER
R8 4k7
R9 4k7
R10 4k7
R11 4k7
R12 4k7
R1 10k
R2 10k
C1 100nF
C2 10pF
C3 10pF
X1 32,768 kHz
RTCC_ALARM
RTCC_SCK
RTCC_SI
RTCC_SO
RTCC_CS
U1
SCK
SI
SO
CS
VBAT
VCC
MCP79511-I/MS
C4 100pF
R13 1k
D1 BAT54
CN6
SB19
D2 VD/VM SSL-LX3059IGW-CA
D3 VD/VM SSL-LX3059IGW-CA
D4 VD/VM SSL-LX3059IGW-CA
D5 VD/VM SSL-LX3059IGW-CA
D6 VD/VM SSL-LX3059IGW-CA
D7 VD/VM SSL-LX3059IGW-CA
D8 VD/VM SSL-LX3059IGW-CA
D9 VD/VM SSL-LX3059IGW-CA
R14 150R
R15 150R
R16 150R
R17 150R
R18 150R
R19 150R
R20 150R
R21 150R
R30 150R
R31 150R
R32 150R
R33 150R
R34 150R
R35 150R
R36 150R
R37 150R
Q6 BC847
Q7 BC847
Q8 BC847
Q9 BC847
Q10 BC847
Q11 BC847
Q12 BC847
Q13 BC847
Q14 BC847
Q15 BC847
Q16 BC847
Q17 BC847
Q18 BC847
Q19 BC847
Q20 BC847
Q21 BC847
LED_1R
LED_1G
LED_2R
LED_2G
LED_3R
LED_3G
LED_4R
LED_4G
LED_5R
LED_5G
LED_6R
LED_6G
LED_7R
LED_7G
LED_8R
LED_8G
R22 4k7
R23 4k7
R24 4k7
R25 4k7
R26 4k7
R27 4k7
R28 4k7
R29 4k7
R38 4k7
R39 4k7
R40 4k7
R41 4k7
R42 4k7
R43 4k7
R44 4k7
R45 4k7
CN7
Header 20X2
GPIO1 - JP4 da DE4
GPIO1_D0
GPIO1_D2
GPIO1_D4
GPIO1_D6
GPIO1_D8
GPIO1_D10
GPIO1_D12
GPIO1_D14
GPIO1_D16
GPIO1_D18
GPIO1_D20
GPIO1_D22
GPIO1_D24
GPIO1_D29
GPIO1_D31
GPIO1_D33
GPIO1_D35
GPIO1_D1
GPIO1_D3
GPIO1_D5
GPIO1_D7
GPIO1_D9
GPIO1_D11
GPIO1_D13
GPIO1_D15
GPIO1_D17
GPIO1_D19
GPIO1_D21
GPIO1_D23
LED_ST1
LED_ST2
LED_ST3
LED_ST4
LED_1R
LED_2R
LED_3R
LED_4R
LED_5R
LED_6R
LED_7R
LED_8R
LED_1G
LED_2G
LED_3G
LED_4G
LED_5G
LED_6G
LED_7G
LED_8G
C7 10uF/10V
C8 10uF/10V
C5 10nF
U2
D
R
VCC
SN65LVDS179DGKR
SINC_OUT
SINC_IN
R49 100R - NC
R50 100R
CN8
Header 2
Sinc Out
CN10
Header 2
Sinc In
CN9
Header 2
Reset no Painel
C6 100nF
R46 10k
R47 1k
R48 1k
RST
FD1
FD2
ESD
Ler Documentacao
PCI1
PCI Painel
REV 1_02
Obs:
LED_ST1..LED_ST4 = 4 leds de status
LED_1R/1B ... 8R/8B = 8 leds bicolores p/ canais
Resistor padrão: 0603 - 5%
Capacitor padrão: 0603 - 10%
* - Colados em U2
Rev 1_03 -> 1_04: R49 must be NC
Title
Leds, Rtcc + mac address, reset & sinc´s lvds
Size
A3
Number
painel_meb.PrjPCB
Revision
1_04
Date: 31/08/2018
Sheet 1of 1
File: C:\projetos\..\painel_meb.SchDoc
Drawn By: CCB