REV.	DESCRIPTION	DATE	DESIGNER	CHECKED BY	ENGINEER
1	PRELIMINARY	7/19/2021	J. Bohenek	CKR	ENG
2					

NOTES: UNLESS OTHERWISE SPECIFIED

1. ALL RESISTOR VALUES ARE IN OHMS, 1%, 100PPM.
2. ALL CAPACITOR VALUES ARE IN MICROFARADS, 50V.
3 ALL INDUCTOR VALUES ARE IN MICROHENRIES.

UNLESS OTHERWISE SPECIFIED
ALL DIMENSIONS ARE IN INCHES
DIMENSIONS IN BRACKETS [X.XX] (WHERE PRESENT)
ARE MILLIMETERS AND ARE FOR REFERENCE ONLY
INTERPRET DRAWING AS PER ANSI Y14.5-1994 OR Y32.2-1975

DIMENSIONAL TOLERANCES
X. ± 0.060
.X ± 0.030
.XX ± 0.015
.XXX ± 0.005

ANGULAR TOLERANCE
±0.5°

FINISH:
125

BREAK EDGES & SHARP CORNERS 0.005 MIN. TO 0.030 MAX

BROOKHAVEN NATIONAL LABORATORY
BROOKHAVEN SCIENCE ASSOCIATES
UPTON, N.Y. 11973
Exploring Life's Mysteries,
Protecting its Future

DRAWN BY	J. Mead	DR DATE
CHECKED BY	J. Hammond	CH DATE
VACUUM APPROVAL	NA	
ENGINEER APPROVAL	J. Mead	EN DATE
SUPERVISOR APPROVAL	D. Padrazo	SP DATE
ES&H APPROVAL	ES&H APP	QA DATE
QA APPROVAL	QA APP	ES DATE

SCHEMATIC DIAGRAM
RF zuBPM-II
Zynq UltraScale+ DFE

B — SHEET SIZE
LT-EL-SR-EU-BPM-0614-03 — DRAWING/PART NUMBER
2 — REVISION

NEXT ASSY:
PROJECT:
THIRD ANGLE PROJECTION
SCALE: N/A
WBS# -
ESH&Q RISK LEVEL A-3
SHEET 1 OF 31

FPGA - Bank 0 & HD Banks

U9
XCZU9FFVB1156

BANK 44

IO_L12N_AD0N_44_AE14	AE14	
IO_L12P_AD0P_44_AE15	AE15	
IO_L11N_AD1N_44_AG15	AG15	sfp4_rxlos
IO_L11P_AD1P_44_AF15	AF15	sfp5_rxlos
IO_L10N_AD2N_44_AG13	AG13	
IO_L10P_AD2P_44_AG14	AG14	sfp3_rxlos
IO_L9N_AD3N_44_AF13	AF13	
IO_L9P_AD3P_44_AE13	AE13	
IO_L8N_HDGC_AD4N_44_AJ14	AJ14	sfp5_led0
IO_L8P_HDGC_AD4P_44_AJ15	AJ15	sfp4_led1
IO_L7N_HDGC_AD5N_44_AH13	AH13	
IO_L7P_HDGC_AD5P_44_AH14	AH14	sfp4_led0
IO_L6N_HDGC_AD6N_44_AL12	AL12	sfp1_led0
IO_L6P_HDGC_AD6P_44_AK13	AK13	sfp1_rxlos
IO_L5N_HDGC_AD7N_44_AK14	AK14	sfp2_rxlos
IO_L5P_HDGC_AD7P_44_AK15	AK15	sfp5_led1
IO_L4N_AD8N_44_AM13	AM13	sfp1_led1
IO_L4P_AD8P_44_AL13	AL13	sfp0_led0
IO_L3N_AD9N_44_AP12	AP12	sfp0_rxlos
IO_L3P_AD9P_44_AN12	AN12	sfp3_led1
IO_L2N_AD10N_44_AN13	AN13	sfp2_led1
IO_L2P_AD10P_44_AM14	AM14	sfp0_led1
IO_L1N_AD11N_44_AP14	AP14	sfp3_led0
IO_L1P_AD11P_44_AN14	AN14	sfp2_led0

XCZU9EG-2FFVB1156E

U9
XCZU9FFVB1156

BANK 49

IO_L12N_AD8N_49_E13	E13	hd_6c
IO_L12P_AD8P_49_F13	F13	hd_5a
IO_L11N_AD9N_49_D12	D12	hd_5b
IO_L11P_AD9P_49_E12	E12	hd_7c
IO_L10N_AD10N_49_B12	B12	hd_5d
IO_L10P_AD10P_49_C12	C12	hd_4b
IO_L9N_AD11N_49_A12	A12	hd_2c
IO_L9P_AD11P_49_A13	A13	hd_1a
IO_L8N_HDGC_49_B13	B13	hd_2b
IO_L8P_HDGC_49_C13	C13	hd_3b
IO_L7N_HDGC_49_B14	B14	hd_3d
IO_L7P_HDGC_49_C14	C14	hd_4d
IO_L6N_HDGC_49_D14	D14	hd_4c
IO_L6P_HDGC_49_E14	E14	hd_5c
IO_L5N_HDGC_49_D15	D15	hd_3c
IO_L5P_HDGC_49_E15	E15	hd_2a
IO_L4N_AD12N_49_A15	A15	hd_1c
IO_L4P_AD12P_49_B15	B15	hd_1b
IO_L3N_AD13N_49_A16	A16	hd_1d
IO_L3P_AD13P_49_B16	B16	hd_2d
IO_L2N_AD14N_49_C16	C16	
IO_L2P_AD14P_49_D16	D16	
IO_L1N_AD15N_49_F15	F15	
IO_L1P_AD15P_49_F16	F16	

U9
XCZU9FFVB1156

BANK 47

IO_L12N_AD0N_47_A20	A20	fp_in2_fpga
IO_L12P_AD0P_47_B20	B20	fp_out2_fpga
IO_L11N_AD1N_47_A22	A22	fp_out3_fpga
IO_L11P_AD1P_47_A21	A21	fp_out1_fpga
IO_L10N_AD2N_47_B21	B21	fp_out0_fpga
IO_L10P_AD2P_47_C21	C21	fp_in3_fpga
IO_L9N_AD3N_47_C22	C22	fp_in1_fpga
IO_L9P_AD3P_47_D21	D21	fp_led7
IO_L8N_HDGC_AD4N_47_D20	D20	fp_in0_fpga
IO_L8P_HDGC_AD4P_47_E20	E20	fp_led5
IO_L7N_HDGC_AD5N_47_D22	D22	fp_led6
IO_L7P_HDGC_AD5P_47_E22	E22	fp_led4
IO_L6N_HDGC_AD6N_47_F20	F20	fp_led3
IO_L6P_HDGC_AD6P_47_G20	G20	fp_led1
IO_L5N_HDGC_AD7N_47_F21	F21	fp_led2
IO_L5P_HDGC_AD7P_47_G21	G21	fp_led0
IO_L4N_AD8N_47_J20	J20	
IO_L4P_AD8P_47_J19	J19	
IO_L3N_AD9N_47_H21	H21	
IO_L3P_AD9P_47_J21	J21	
IO_L2N_AD10N_47_K19	K19	
IO_L2P_AD10P_47_L19	L19	
IO_L1N_AD11N_47_K20	K20	
IO_L1P_AD11P_47_L20	L20	

U9
XCZU9FFVB1156

BANK 50

IO_L12N_AD8N_50_J15	J15	hd_7a
IO_L12P_AD8P_50_J16	J16	hd_7d
IO_L11N_AD9N_50_G16	G16	hd_3a
IO_L11P_AD9P_50_H16	H16	hd_6d
IO_L10N_AD10N_50_H14	H14	hd_9d
IO_L10P_AD10P_50_J14	J14	hd_8a
IO_L9N_AD11N_50_G14	G14	hd_8d
IO_L9P_AD11P_50_G15	G15	hd_4a
IO_L8N_HDGC_50_G13	G13	hd_7b
IO_L8P_HDGC_50_H13	H13	
IO_L7N_HDGC_50_H12	H12	hd_9a
IO_L7P_HDGC_50_J12	J12	hd_10a
IO_L6N_HDGC_50_F11	F11	hd_8b
IO_L6P_HDGC_50_F12	F12	hd_8c
IO_L5N_HDGC_50_G11	G11	hd_9b
IO_L5P_HDGC_50_H11	H11	hd_10b
IO_L4N_AD12N_50_D10	D10	hd_6a
IO_L4P_AD12P_50_D11	D11	hd_6b
IO_L3N_AD13N_50_E10	E10	hd_9c
IO_L3P_AD13P_50_F10	F10	
IO_L2N_AD14N_50_G10	G10	
IO_L2P_AD14P_50_H10	H10	
IO_L1N_AD15N_50_J10	J10	
IO_L1P_AD15P_50_J11	J11	

U9
XCZU9FFVB1156

BANK 48

IO_L12N_AD8N_48_A18	A18	
IO_L12P_AD8P_48_A17	A17	
IO_L11N_AD9N_48_C19	C19	
IO_L11P_AD9P_48_C18	C18	
IO_L10N_AD10N_48_B19	B19	
IO_L10P_AD10P_48_B18	B18	
IO_L9N_AD11N_48_C17	C17	
IO_L9P_AD11P_48_D17	D17	
IO_L8N_HDGC_48_E18	E18	
IO_L8P_HDGC_48_E17	E17	
IO_L7N_HDGC_48_D19	D19	
IO_L7P_HDGC_48_E19	E19	
IO_L6N_HDGC_48_F18	F18	
IO_L6P_HDGC_48_F17	F17	
IO_L5N_HDGC_48_G19	G19	fan_tach
IO_L5P_HDGC_48_G18	G18	
IO_L4N_AD12N_48_K17	K17	
IO_L4P_AD12P_48_L17	L17	
IO_L3N_AD13N_48_K18	K18	ser_num
IO_L3P_AD13P_48_L18	L18	
IO_L2N_AD14N_48_H17	H17	sata_das
IO_L2P_AD14P_48_J17	J17	sata_devsleep
IO_L1N_AD15N_48_H19	H19	
IO_L1P_AD15P_48_H18	H18	

U9
XCZU9FFVB1156

BANK 0

pull-up during config input
0= pull-up on each SelectIO enabled
1= pull-up on each SelectIO disabled

POR delay override
0=standard PL power-on delay time
1=faster PL power-on delay time

PUDC_B_0_AD15	AD15	
POR_OVERRIDE_AD14	AD14	
DXP_W18	W18	VCC_PSADC
DXN_W17	W17	
VCCADC_T18	T18	
GNDADC_T17	T17	
VREFP_V18	V18	
VREFN_U17	U17	
VP_U18	U18	
VN_V17	V17	

VCC_1.8V
R213 0
R214 1K

VCC_0.85V
R215 1K
R216 0

C274 to pin 1.0uF
place next

B	LT-EL-SR-EU-BPM-0614-03	2
SHEET SIZE	DRAWING/PART NUMBER	REVISION

ESH&Q RISK LEVEL A-3

SHEET 2 OF 31

FPGA - HP Banks

U9
XCZU9FFVB1156

BANK 64

IO_T3U_N12_64_AP1	AP1	dbg16
IO_L24N_T3U_N11_64_AK2	AK2	dbg13
IO_L24P_T3U_N10_64_AK3	AK3	dbg6
IO_L23N_T3U_N9_64_AL1	AL1	dbg19
IO_L23P_T3U_N8_64_AK1	AK1	
IO_L22N_T3U_N7_DBC_AD0N_64_AL2	AL2	dbg12
IO_L22P_T3U_N6_DBC_AD0P_64_AL3	AL3	dbg8
IO_L21N_T3L_N5_AD8N_64_AN1	AN1	dbg17
IO_L21P_T3L_N4_AD8P_64_AM1	AM1	dbg18
IO_L20N_T3L_N3_AD1N_64_AP3	AP3	dbg11
IO_L20P_T3L_N2_AD1P_64_AN3	AN3	dbg10
IO_L19N_T3L_N1_DBC_AD9N_64_AP2	AP2	dbg15
IO_L19P_T3L_N0_DBC_AD9P_64_AN2	AN2	dbg14
IO_T2U_N12_64_AM3	AM3	dbg9
IO_L18N_T2U_N11_AD2N_64_AK4	AK4	dbg3
IO_L18P_T2U_N10_AD2P_64_AK5	AK5	dbg0
IO_L17N_T2U_N9_AD10N_64_AN4	AN4	dbg5
IO_L17P_T2U_N8_AD10P_64_AM4	AM4	dbg4
IO_L16N_T2U_N7_QBC_AD3N_64_AP6	AP6	
IO_L16P_T2U_N6_QBC_AD3P_64_AN6	AN6	
IO_L15N_T2L_N5_AD11N_64_AP4	AP4	dbg7
IO_L15P_T2L_N4_AD11P_64_AP5	AP5	
IO_L14N_T2L_N3_GC_64_AM5	AM5	dbg2
IO_L14P_T2L_N2_GC_64_AM6	AM6	
IO_L13N_T2L_N1_GC_QBC_64_AL5	AL5	dbg1
IO_L13P_T2L_N0_GC_QBC_64_AL6	AL6	
IO_T1U_N12_64_AJ7	AJ7	
IO_L12N_T1U_N11_GC_64_AL7	AL7	
IO_L12P_T1U_N10_GC_64_AL8	AL8	
IO_L11N_T1U_N9_GC_64_AK7	AK7	
IO_L11P_T1U_N8_GC_64_AK8	AK8	
IO_L10N_T1U_N7_QBC_AD4N_64_AP7	AP7	
IO_L10P_T1U_N6_QBC_AD4P_64_AN7	AN7	
IO_L9N_T1L_N5_AD12N_64_AK9	AK9	
IO_L9P_T1L_N4_AD12P_64_AJ9	AJ9	
IO_L8N_T1L_N3_AD5N_64_AM8	AM8	
IO_L8P_T1L_N2_AD5P_64_AM9	AM9	
IO_L7N_T1L_N1_QBC_AD13N_64_AP8	AP8	
IO_L7P_T1L_N0_QBC_AD13P_64_AN8	AN8	
IO_T0U_N12_VRP_64_AN11	AN11	
IO_L6N_T0U_N11_AD6N_64_AK10	AK10	
IO_L6P_T0U_N10_AD6P_64_AJ10	AJ10	
IO_L5N_T0U_N9_AD14N_64_AP9	AP9	
IO_L5P_T0U_N8_AD14P_64_AN9	AN9	
IO_L4N_T0U_N7_DBC_AD7N_64_AP10	AP10	
IO_L4P_T0U_N6_DBC_AD7P_64_AP11	AP11	
IO_L3N_T0L_N5_AD15N_64_AM10	AM10	
IO_L3P_T0L_N4_AD15P_64_AL10	AL10	
IO_L2N_T0L_N3_64_AM11	AM11	
IO_L2P_T0L_N2_64_AL11	AL11	
IO_L1N_T0L_N1_DBC_64_AK12	AK12	
IO_L1P_T0L_N0_DBC_64_AJ12	AJ12	
VREF_64_AJ11	AJ11	

U9
XCZU9FFVB1156

BANK 65

IO_T3U_N12_65_AG1	AG1	
IO_L24N_T3U_N11_PERSTN0_65_AE1	AE1	hp_bank65_23_n
IO_L24P_T3U_N10_PERSTN1_I2C_SDA_65_AE2	AE2	hp_bank65_23_p
IO_L23N_T3U_N9_65_AD1	AD1	hp_bank65_24_n
IO_L23P_T3U_N8_I2C_SCLK_65_AD2	AD2	hp_bank65_24_p
IO_L22N_T3U_N7_DBC_AD0N_65_AJ1	AJ1	hp_bank65_22_n
IO_L22P_T3U_N6_DBC_AD0P_65_AH1	AH1	hp_bank65_22_p
IO_L21N_T3L_N5_AD8N_65_AF1	AF1	hp_bank65_21_n
IO_L21P_T3L_N4_AD8P_65_AF2	AF2	hp_bank65_21_p
IO_L20N_T3L_N3_AD1N_65_AH3	AH3	
IO_L20P_T3L_N2_AD1P_65_AG3	AG3	
IO_L19N_T3L_N1_DBC_AD9N_65_AJ2	AJ2	hp_bank65_19_n
IO_L19P_T3L_N0_DBC_AD9P_65_AH2	AH2	hp_bank65_19_p
IO_T2U_N12_65_AD5	AD5	
IO_L18N_T2U_N11_AD2N_65_AE4	AE4	hp_bank65_18_n
IO_L18P_T2U_N10_AD2P_65_AD4	AD4	hp_bank65_18_p
IO_L17N_T2U_N9_AD10N_65_AF3	AF3	hp_bank65_17_n
IO_L17P_T2U_N8_AD10P_65_AE3	AE3	hp_bank65_17_p
IO_L16N_T2U_N7_QBC_AD3N_65_AJ5	AJ5	hp_bank65_16_n
IO_L16P_T2U_N6_QBC_AD3P_65_AJ6	AJ6	hp_bank65_16_p
IO_L15N_T2L_N5_AD11N_65_AJ4	AJ4	hp_bank65_15_n
IO_L15P_T2L_N4_AD11P_65_AH4	AH4	hp_bank65_15_p
IO_L14N_T2L_N3_GC_65_AG4	AG4	hp_bank65_14_gc_n
IO_L14P_T2L_N2_GC_65_AG5	AG5	hp_bank65_14_gc_p
IO_L13N_T2L_N1_GC_QBC_65_AF5	AF5	hp_bank65_13_gc_n
IO_L13P_T2L_N0_GC_QBC_65_AE5	AE5	hp_bank65_13_gc_p
IO_T1U_N12_65_AH9	AH9	
IO_L12N_T1U_N11_GC_65_AF7	AF7	hp_bank65_12_gc_n
IO_L12P_T1U_N10_GC_65_AE7	AE7	hp_bank65_12_gc_p
IO_L11N_T1U_N9_GC_65_AG6	AG6	hp_bank65_11_gc_n
IO_L11P_T1U_N8_GC_65_AF6	AF6	hp_bank65_11_gc_p
IO_L10N_T1U_N7_QBC_AD4N_65_AF8	AF8	hp_bank65_10_n
IO_L10P_T1U_N6_QBC_AD4P_65_AE8	AE8	hp_bank65_10_p
IO_L9N_T1L_N5_AD12N_65_AD6	AD6	hp_bank65_9_n
IO_L9P_T1L_N4_AD12P_65_AD7	AD7	hp_bank65_9_p
IO_L8N_T1L_N3_AD5N_65_AH8	AH8	
IO_L8P_T1L_N2_AD5P_65_AG8	AG8	
IO_L7N_T1L_N1_QBC_AD13N_65_AH6	AH6	hp_bank65_7_n
IO_L7P_T1L_N0_QBC_AD13P_65_AH7	AH7	hp_bank65_7_p
IO_T0U_N12_VRP_65_AD9	AD9	
IO_L6N_T0U_N11_AD6N_65_AE9	AE9	hp_bank65_6_n
IO_L6P_T0U_N10_AD6P_65_AD10	AD10	hp_bank65_6_p
IO_L5N_T0U_N9_AD14N_65_AG9	AG9	hp_bank65_5_n
IO_L5P_T0U_N8_AD14P_65_AG10	AG10	hp_bank65_5_p
IO_L4N_T0U_N7_DBC_AD7N_65_AG11	AG11	
IO_L4P_T0U_N6_DBC_AD7P_SMBALERT_65_AF11	AF11	
IO_L3N_T0L_N5_AD15N_65_AF12	AF12	hp_bank65_3_n
IO_L3P_T0L_N4_AD15P_65_AE12	AE12	hp_bank65_3_p
IO_L2N_T0L_N3_65_AH11	AH11	
IO_L2P_T0L_N2_65_AH12	AH12	
IO_L1N_T0L_N1_DBC_65_AF10	AF10	hp_bank65_1_n
IO_L1P_T0L_N0_DBC_65_AE10	AE10	hp_bank65_1_p
VREF_65_AD11	AD11	

B	LT-EL-SR-EU-BPM-0614-03	2
SHEET SIZE	DRAWING/PART NUMBER	REVISION
ESH&Q RISK LEVEL A-3	SHEET 3 OF 31	

FPGA - HP Banks

U9
XCZU9FFVB1156

BANK 66

IO_T3U_N12_66_AB1	AB1	
IO_L24N_T3U_N11_66_W1	W1	hp_bank66_17_n
IO_L24P_T3U_N10_66_W2	W2	hp_bank66_17_p
IO_L23N_T3U_N9_66_V1	V1	hp_bank66_18_n
IO_L23P_T3U_N8_66_V2	V2	hp_bank66_18_p
IO_L22N_T3U_N7_DBC_AD0N_66_Y1	Y1	hp_bank66_16_n
IO_L22P_T3U_N6_DBC_AD0P_66_Y2	Y2	hp_bank66_16_p
IO_L21N_T3L_N5_AD8N_66_AA1	AA1	hp_bank66_21_n
IO_L21P_T3L_N4_AD8P_66_AA2	AA2	hp_bank66_21_p
IO_L20N_T3L_N3_AD1N_66_AC3	AC3	
IO_L20P_T3L_N2_AD1P_66_AB3	AB3	
IO_L19N_T3L_N1_DBC_AD9N_66_AC1	AC1	hp_bank66_15_n
IO_L19P_T3L_N0_DBC_AD9P_66_AC2	AC2	hp_bank66_15_p
IO_T2U_N12_66_AA3	AA3	
IO_L18N_T2U_N11_AD2N_66_U4	U4	hp_bank66_23_n
IO_L18P_T2U_N10_AD2P_66_U5	U5	hp_bank66_23_p
IO_L17N_T2U_N9_AD10N_66_V3	V3	hp_bank66_24_n
IO_L17P_T2U_N8_AD10P_66_V4	V4	hp_bank66_24_p
IO_L16N_T2U_N7_QBC_AD3N_66_AC4	AC4	hp_bank66_22_n
IO_L16P_T2U_N6_QBC_AD3P_66_AB4	AB4	hp_bank66_22_p
IO_L15N_T2L_N5_AD11N_66_W4	W4	hp_bank66_19_n
IO_L15P_T2L_N4_AD11P_66_W5	W5	hp_bank66_19_p
IO_L14N_T2L_N3_GC_66_AA5	AA5	hp_bank66_14_gc_n
IO_L14P_T2L_N2_GC_66_Y5	Y5	hp_bank66_14_gc_p
IO_L13N_T2L_N1_GC_QBC_66_Y3	Y3	hp_bank66_13_gc_n
IO_L13P_T2L_N0_GC_QBC_66_Y4	Y4	hp_bank66_13_gc_p
IO_T1U_N12_66_AA8	AA8	
IO_L12N_T1U_N11_GC_66_AA6	AA6	hp_bank66_12_gc_n
IO_L12P_T1U_N10_GC_66_AA7	AA7	hp_bank66_12_gc_p
IO_L11N_T1U_N9_GC_66_Y7	Y7	hp_bank66_11_gc_n
IO_L11P_T1U_N8_GC_66_Y8	Y8	hp_bank66_11_gc_p
IO_L10N_T1U_N7_QBC_AD4N_66_AB5	AB5	hp_bank66_10_n
IO_L10P_T1U_N6_QBC_AD4P_66_AB6	AB6	hp_bank66_10_p
IO_L9N_T1L_N5_AD12N_66_W6	W6	hp_bank66_9_n
IO_L9P_T1L_N4_AD12P_66_W7	W7	hp_bank66_9_p
IO_L8N_T1L_N3_AD5N_66_AC8	AC8	
IO_L8P_T1L_N2_AD5P_66_AB8	AB8	
IO_L7N_T1L_N1_QBC_AD13N_66_AC6	AC6	hp_bank66_7_n
IO_L7P_T1L_N0_QBC_AD13P_66_AC7	AC7	hp_bank66_7_p
IO_T0U_N12_VRP_66_W9	W9	
IO_L6N_T0U_N11_AD6N_66_Y9	Y9	hp_bank66_6_n
IO_L6P_T0U_N10_AD6P_66_Y10	Y10	hp_bank66_6_p
IO_L5N_T0U_N9_AD14N_66_AA12	AA12	hp_bank66_5_n
IO_L5P_T0U_N8_AD14P_66_Y12	Y12	hp_bank66_5_p
IO_L4N_T0U_N7_DBC_AD7N_66_AC9	AC9	
IO_L4P_T0U_N6_DBC_AD7P_66_AB9	AB9	
IO_L3N_T0L_N5_AD15N_66_AA10	AA10	hp_bank66_3_n
IO_L3P_T0L_N4_AD15P_66_AA11	AA11	hp_bank66_3_p
IO_L2N_T0L_N3_66_AB10	AB10	
IO_L2P_T0L_N2_66_AB11	AB11	
IO_L1N_T0L_N1_DBC_66_AC11	AC11	hp_bank66_1_n
IO_L1P_T0L_N0_DBC_66_AC12	AC12	hp_bank66_1_p
VREF_66_AD12	AD12	

U9
XCZU9FFVB1156

BANK 67

IO_T3U_N12_67_K14	K14	
IO_L24N_T3U_N11_67_K15	K15	
IO_L24P_T3U_N10_67_L15	L15	
IO_L23N_T3U_N9_67_K13	K13	
IO_L23P_T3U_N8_67_L13	L13	
IO_L22N_T3U_N7_DBC_AD0N_67_M13	M13	
IO_L22P_T3U_N6_DBC_AD0P_67_N13	N13	
IO_L21N_T3L_N5_AD8N_67_N12	N12	
IO_L21P_T3L_N4_AD8P_67_P12	P12	
IO_L20N_T3L_N3_AD1N_67_M14	M14	
IO_L20P_T3L_N2_AD1P_67_M15	M15	
IO_L19N_T3L_N1_DBC_AD9N_67_K16	K16	
IO_L19P_T3L_N0_DBC_AD9P_67_L16	L16	
IO_T2U_N12_67_K10	K10	
IO_L18N_T2U_N11_AD2N_67_K12	K12	
IO_L18P_T2U_N10_AD2P_67_L12	L12	
IO_L17N_T2U_N9_AD10N_67_L11	L11	
IO_L17P_T2U_N8_AD10P_67_M11	M11	
IO_L16N_T2U_N7_QBC_AD3N_67_N8	N8	
IO_L16P_T2U_N6_QBC_AD3P_67_N9	N9	
IO_L15N_T2L_N5_AD11N_67_L10	L10	
IO_L15P_T2L_N4_AD11P_67_M10	M10	
IO_L14N_T2L_N3_GC_67_P9	P9	
IO_L14P_T2L_N2_GC_67_P10	P10	
IO_L13N_T2L_N1_GC_QBC_67_N11	N11	
IO_L13P_T2L_N0_GC_QBC_67_P11	P11	
IO_T1U_N12_67_V9	V9	
IO_L12N_T1U_N11_GC_67_R8	R8	
IO_L12P_T1U_N10_GC_67_T8	T8	
IO_L11N_T1U_N9_GC_67_R9	R9	
IO_L11P_T1U_N8_GC_67_R10	R10	
IO_L10N_T1U_N7_QBC_AD4N_67_T6	T6	
IO_L10P_T1U_N6_QBC_AD4P_67_T7	T7	
IO_L9N_T1L_N5_AD12N_67_U8	U8	
IO_L9P_T1L_N4_AD12P_67_U9	U9	
IO_L8N_T1L_N3_AD5N_67_U6	U6	
IO_L8P_T1L_N2_AD5P_67_V6	V6	
IO_L7N_T1L_N1_QBC_AD13N_67_V7	V7	
IO_L7P_T1L_N0_QBC_AD13P_67_V8	V8	
IO_T0U_N12_VRP_67_W10	W10	
IO_L6N_T0U_N11_AD6N_67_T11	T11	
IO_L6P_T0U_N10_AD6P_67_U11	U11	
IO_L5N_T0U_N9_AD14N_67_V11	V11	
IO_L5P_T0U_N8_AD14P_67_V12	V12	
IO_L4N_T0U_N7_DBC_AD7N_67_R12	R12	
IO_L4P_T0U_N6_DBC_AD7P_67_T12	T12	
IO_L3N_T0L_N5_AD15N_67_T10	T10	
IO_L3P_T0L_N4_AD15P_67_U10	U10	
IO_L2N_T0L_N3_67_R13	R13	
IO_L2P_T0L_N2_67_T13	T13	
IO_L1N_T0L_N1_DBC_67_W11	W11	evr_rcvd_clk_n
IO_L1P_T0L_N0_DBC_67_W12	W12	evr_rcvd_clk_p
VREF_67_N14	N14	

B	LT-EL-SR-EU-BPM-0614-03	2
SHEET SIZE	DRAWING/PART NUMBER	REVISION
ESH&Q RISK LEVEL A-3		SHEET 4 OF 31

FPGA - PL Transceivers

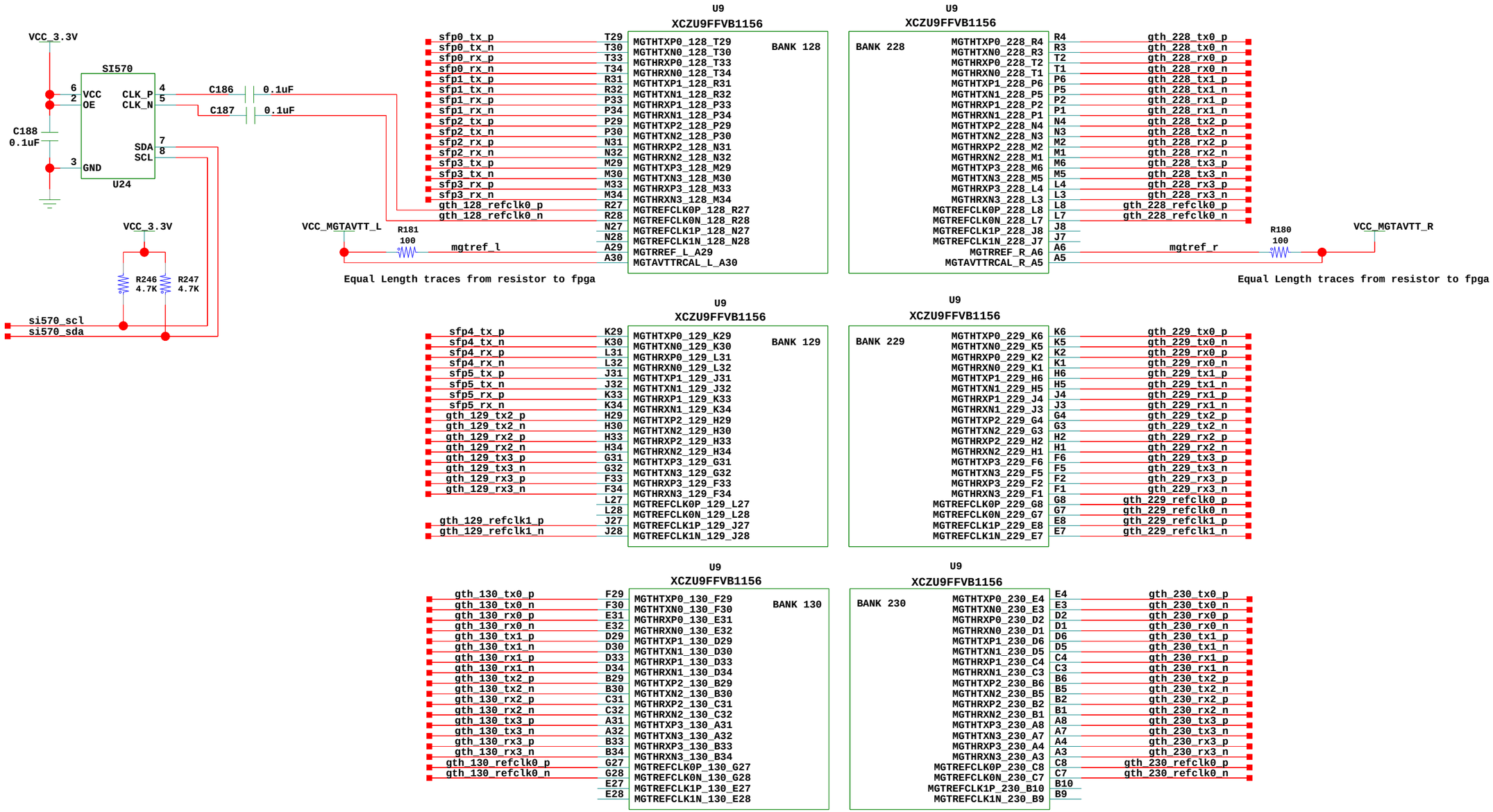

B	LT-EL-SR-EU-BPM-0614-03	2
SHEET SIZE	DRAWING/PART NUMBER	REVISION

ESH&Q RISK LEVEL A-3

SHEET 5 OF 31

FPGA - PS Banks

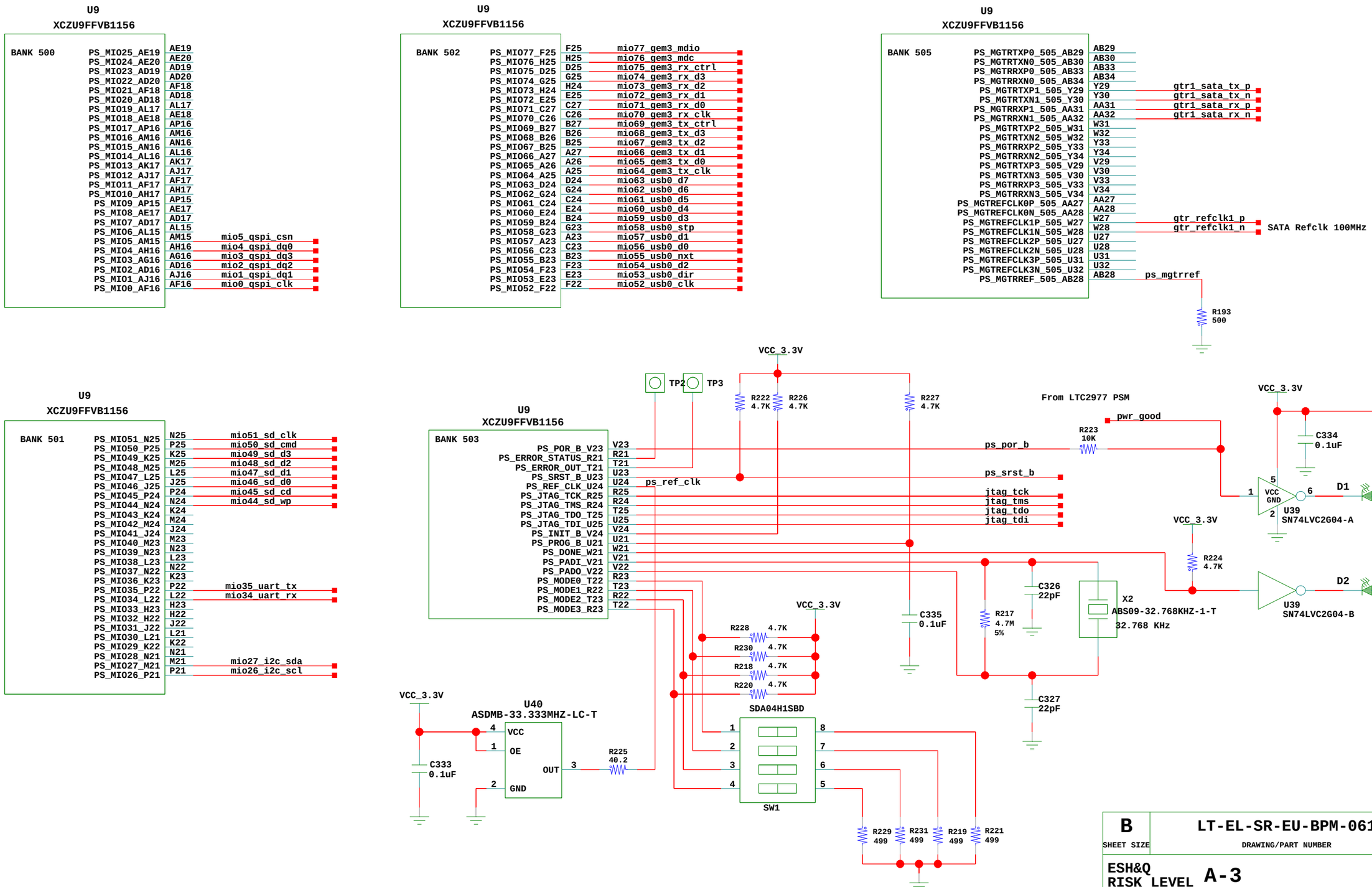

B	LT-EL-SR-EU-BPM-0614-03	2
SHEET SIZE	DRAWING/PART NUMBER	REVISION

ESH&Q RISK LEVEL A-3

SHEET 6 OF 31

FPGA - PS DDR4 Bank

refer to UG583 - Chapter 2 for routing guidance

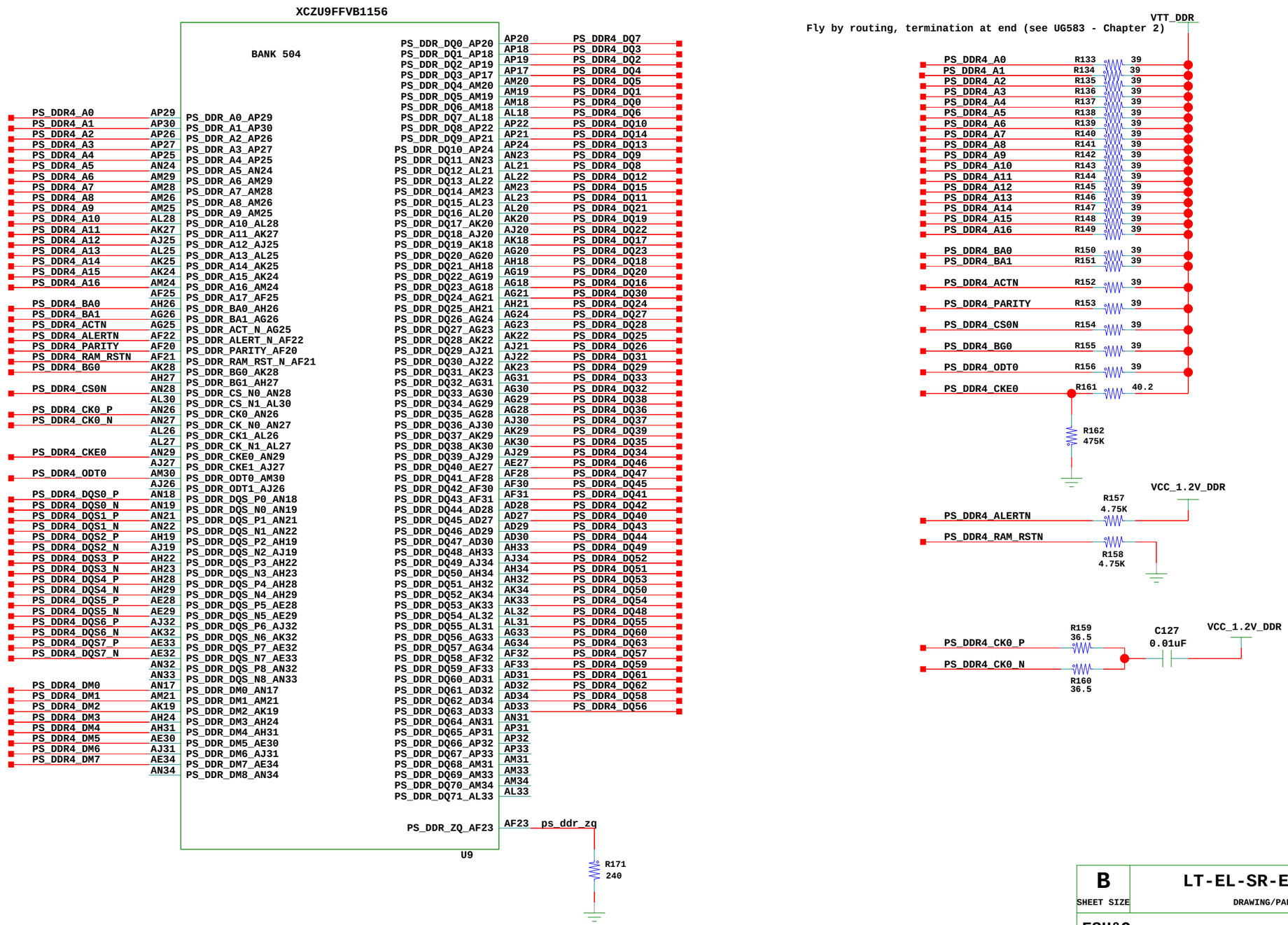

B	LT-EL-SR-EU-BPM-0614-03	2
SHEET SIZE	DRAWING/PART NUMBER	REVISION

ESH&Q RISK LEVEL **A-3**

SHEET 7 OF 31

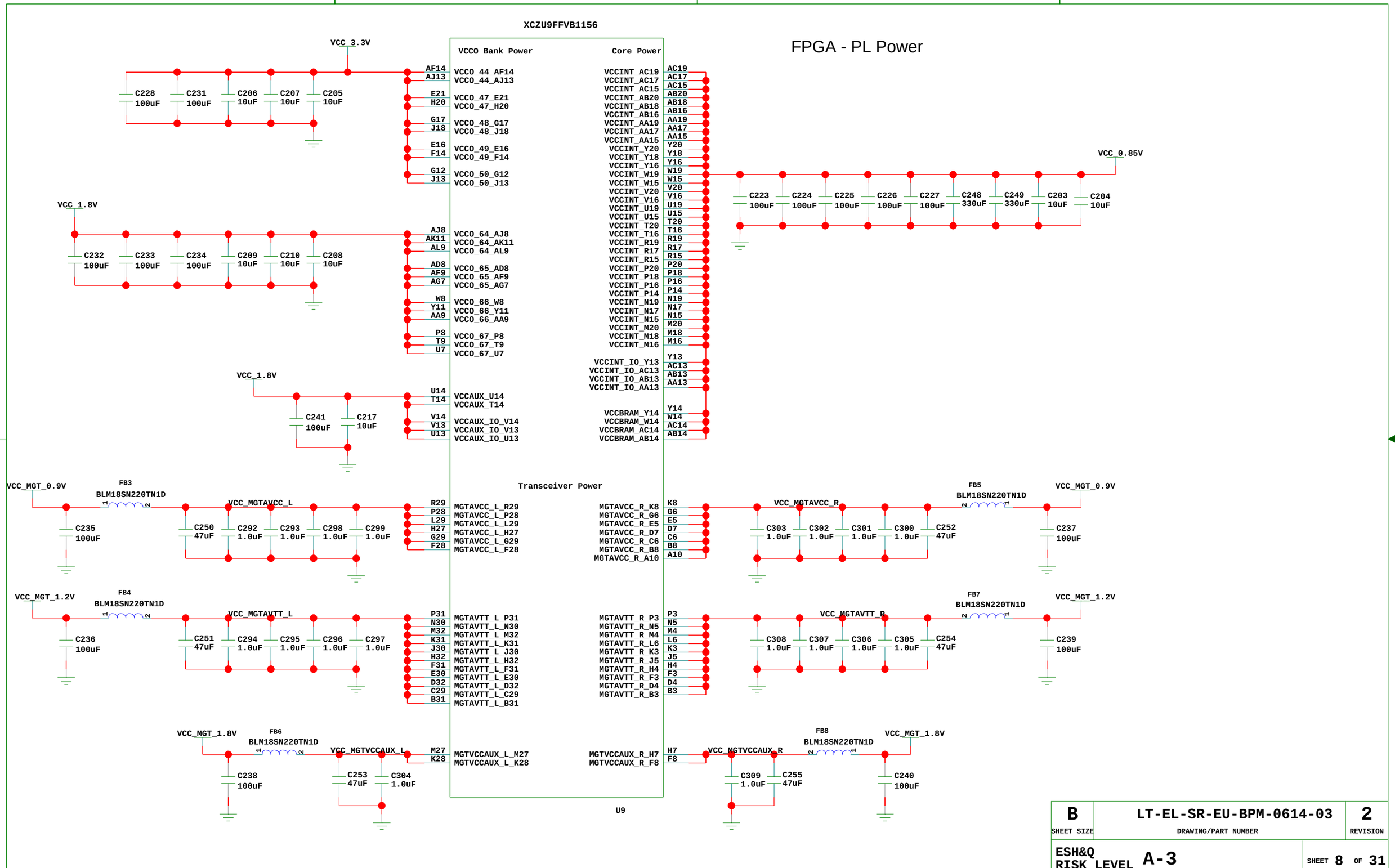

B	LT-EL-SR-EU-BPM-0614-03	2
SHEET SIZE	DRAWING/PART NUMBER	REVISION

ESH&Q RISK LEVEL A-3

SHEET 8 OF 31

FPGA - PS Power

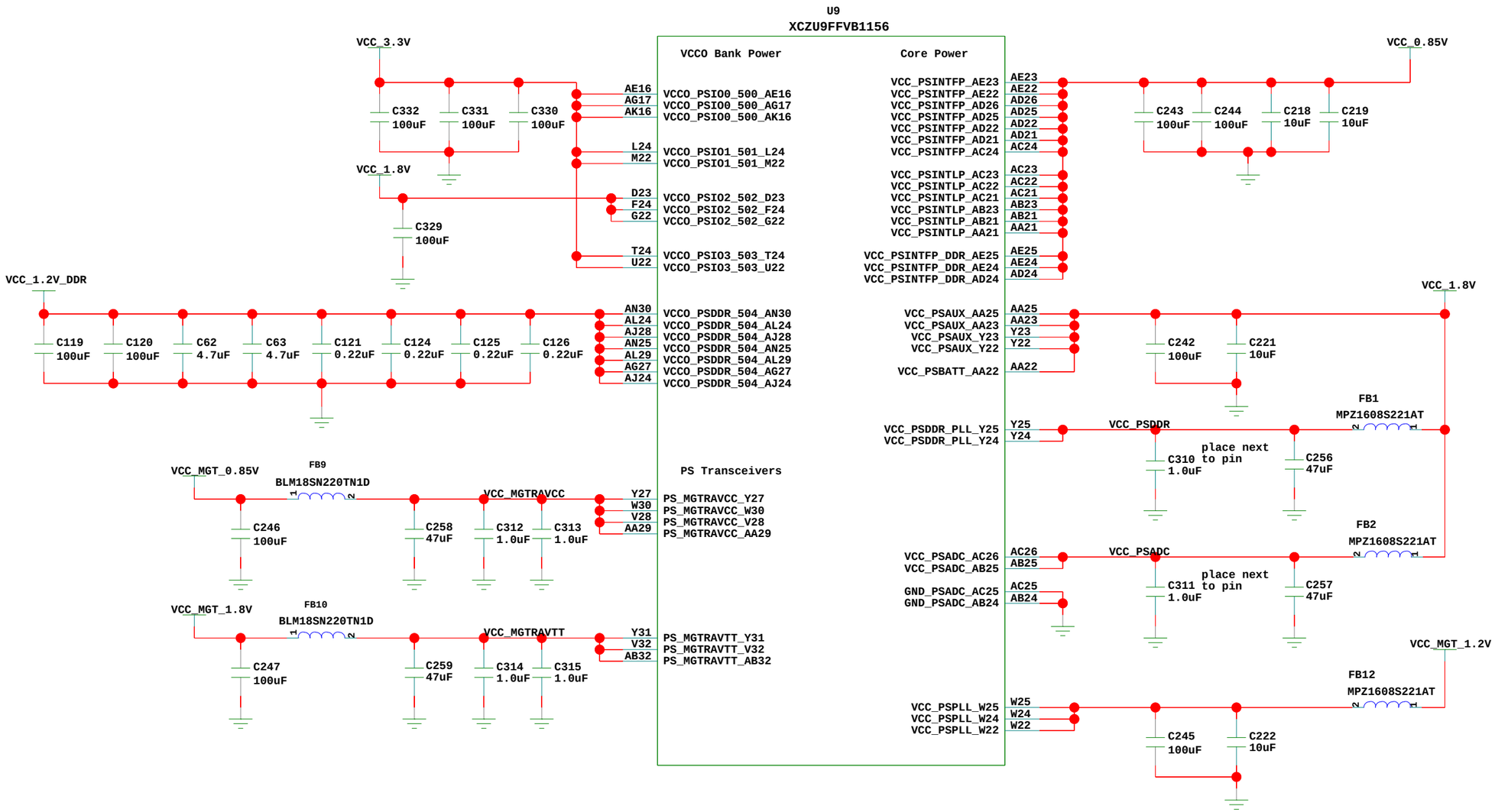

B	LT-EL-SR-EU-BPM-0614-03	2
SHEET SIZE	DRAWING/PART NUMBER	REVISION

ESH&Q RISK LEVEL A-3

SHEET 9 OF 31

FPGA - GND

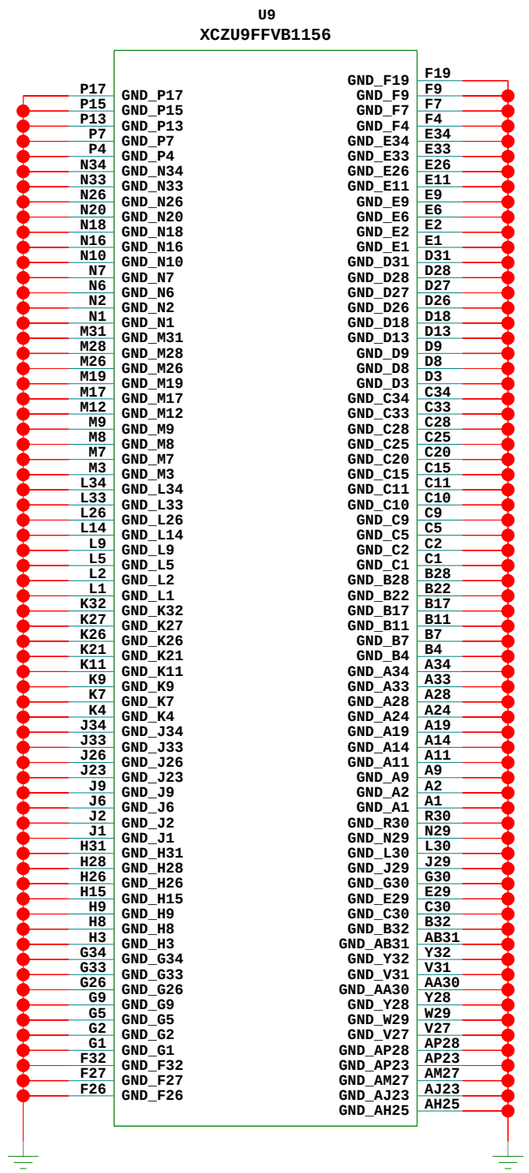

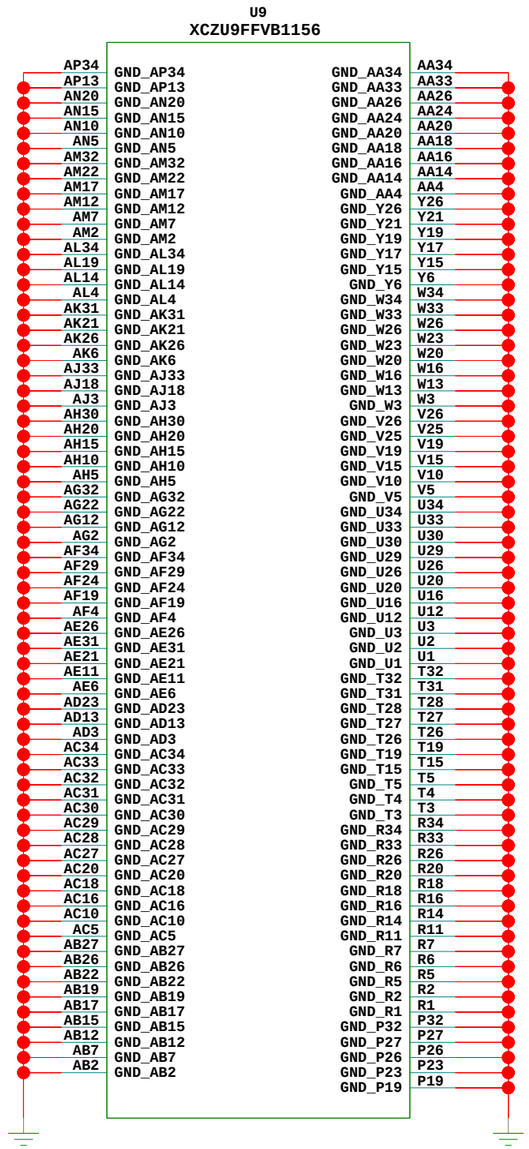

B SHEET SIZE	LT-EL-SR-EU-BPM-0614-03 DRAWING/PART NUMBER	2 REVISION
ESH&Q RISK LEVEL A-3		SHEET 10 OF 31

PS DDR4 Device 0

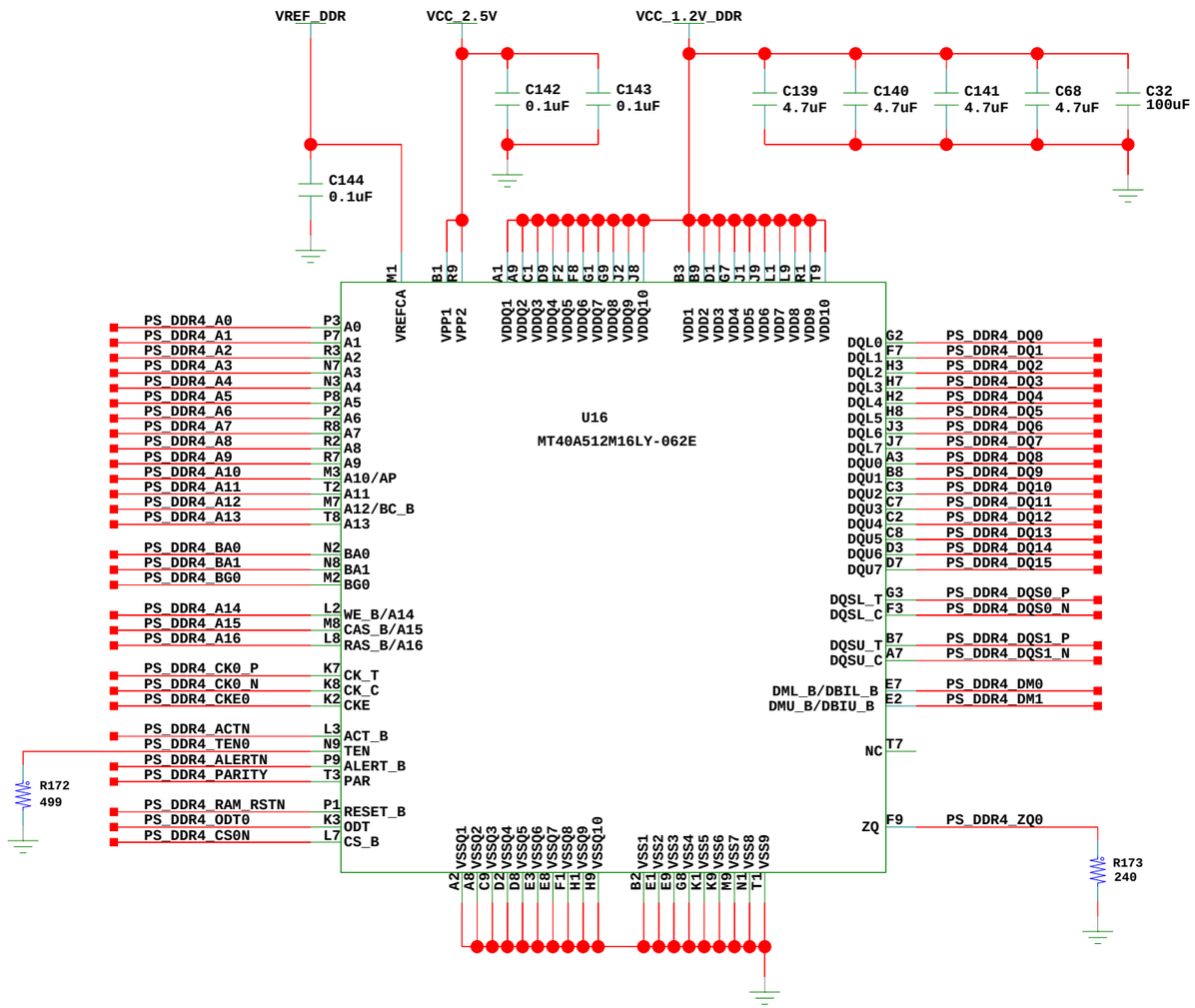

B	LT-EL-SR-EU-BPM-0614-03	2
SHEET SIZE	DRAWING/PART NUMBER	REVISION

ESH&Q RISK LEVEL A-3

SHEET 11 OF 31

PS DDR4 Device 1

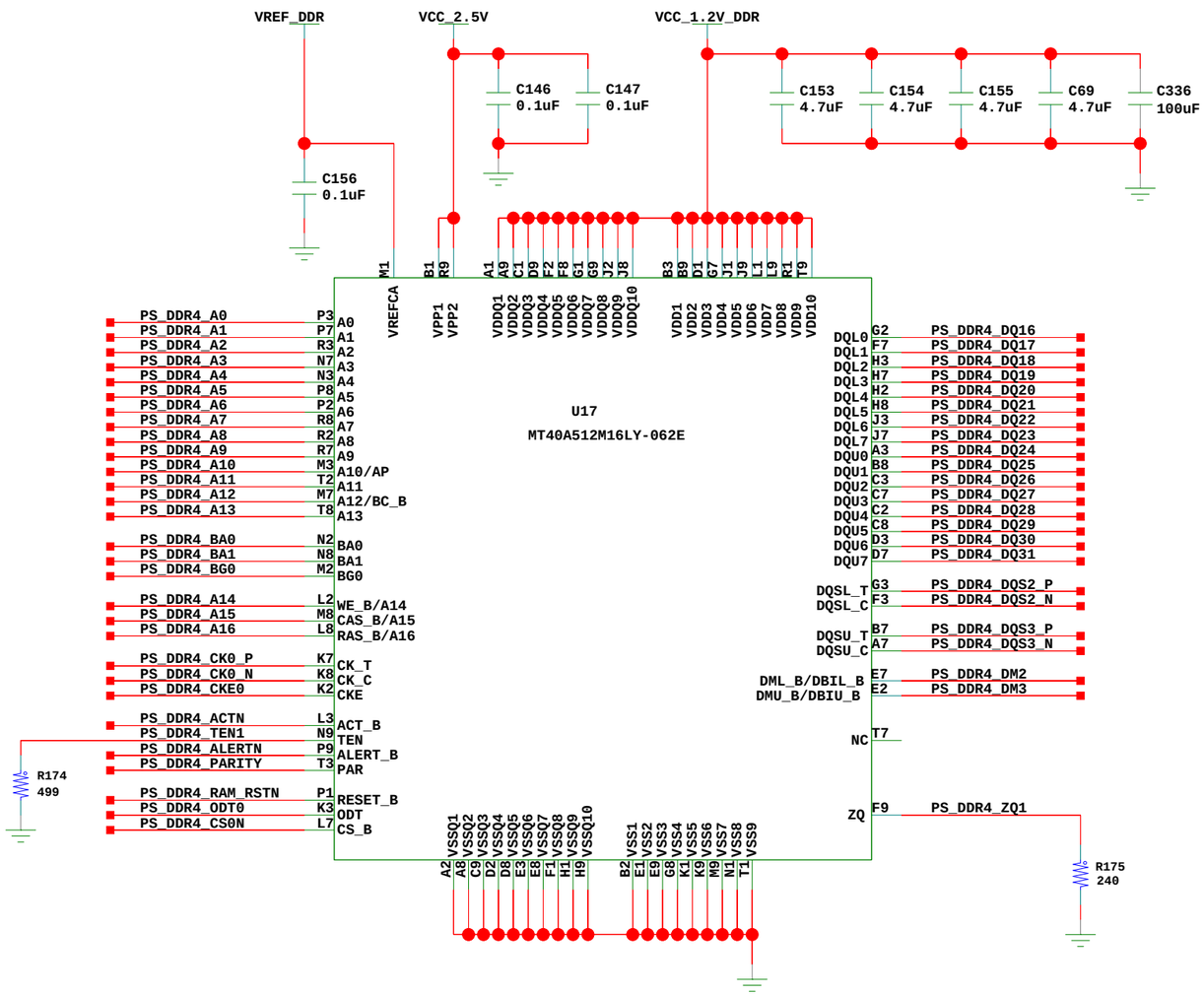

B	LT-EL-SR-EU-BPM-0614-03	2
SHEET SIZE	DRAWING/PART NUMBER	REVISION

ESH&Q RISK LEVEL A-3

SHEET 12 OF 31

PS DDR4 Device 2

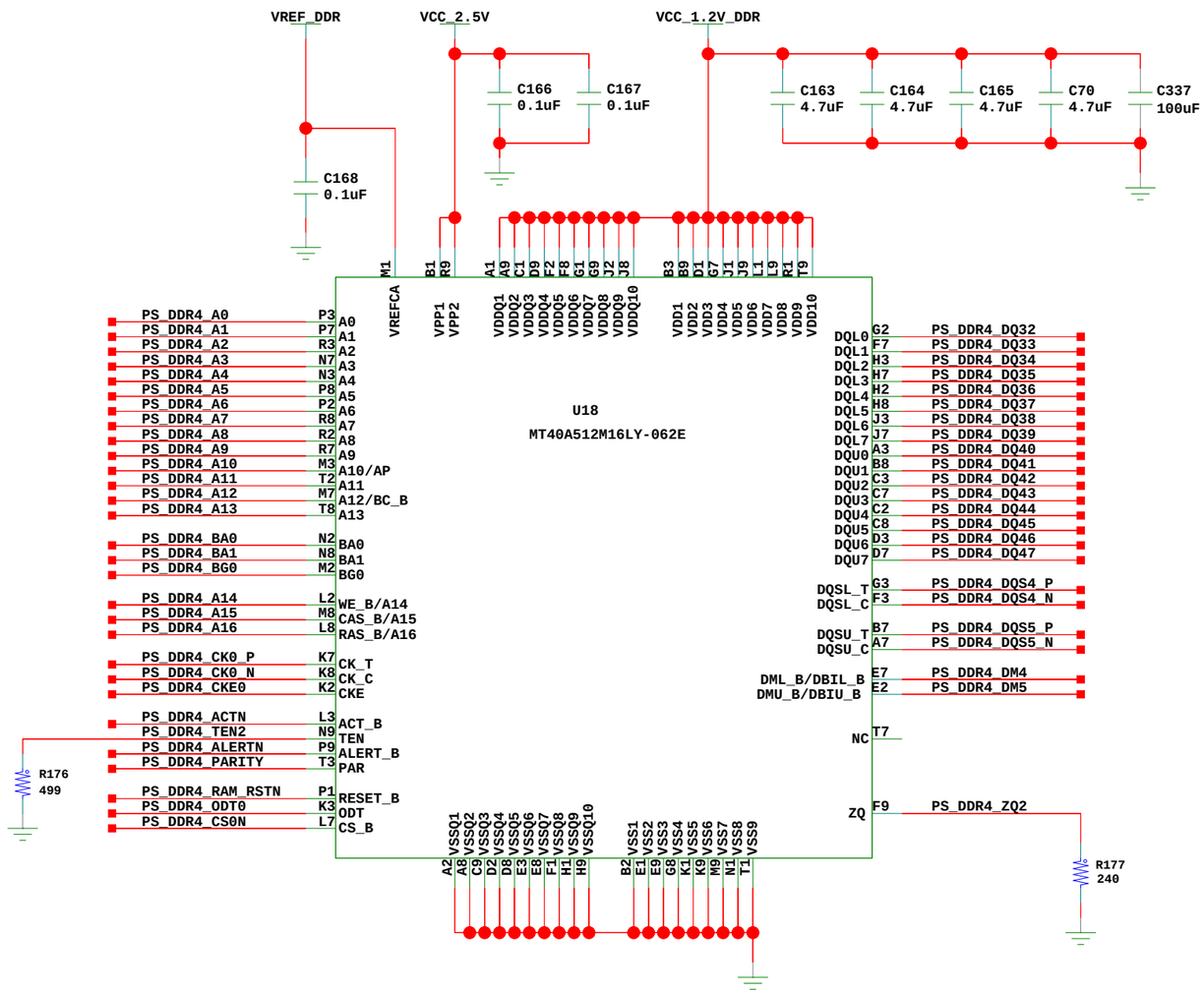

B	LT-EL-SR-EU-BPM-0614-03	2
SHEET SIZE	DRAWING/PART NUMBER	REVISION

ESH&Q RISK LEVEL A-3

SHEET 13 OF 31

PS DDR4 Device 3

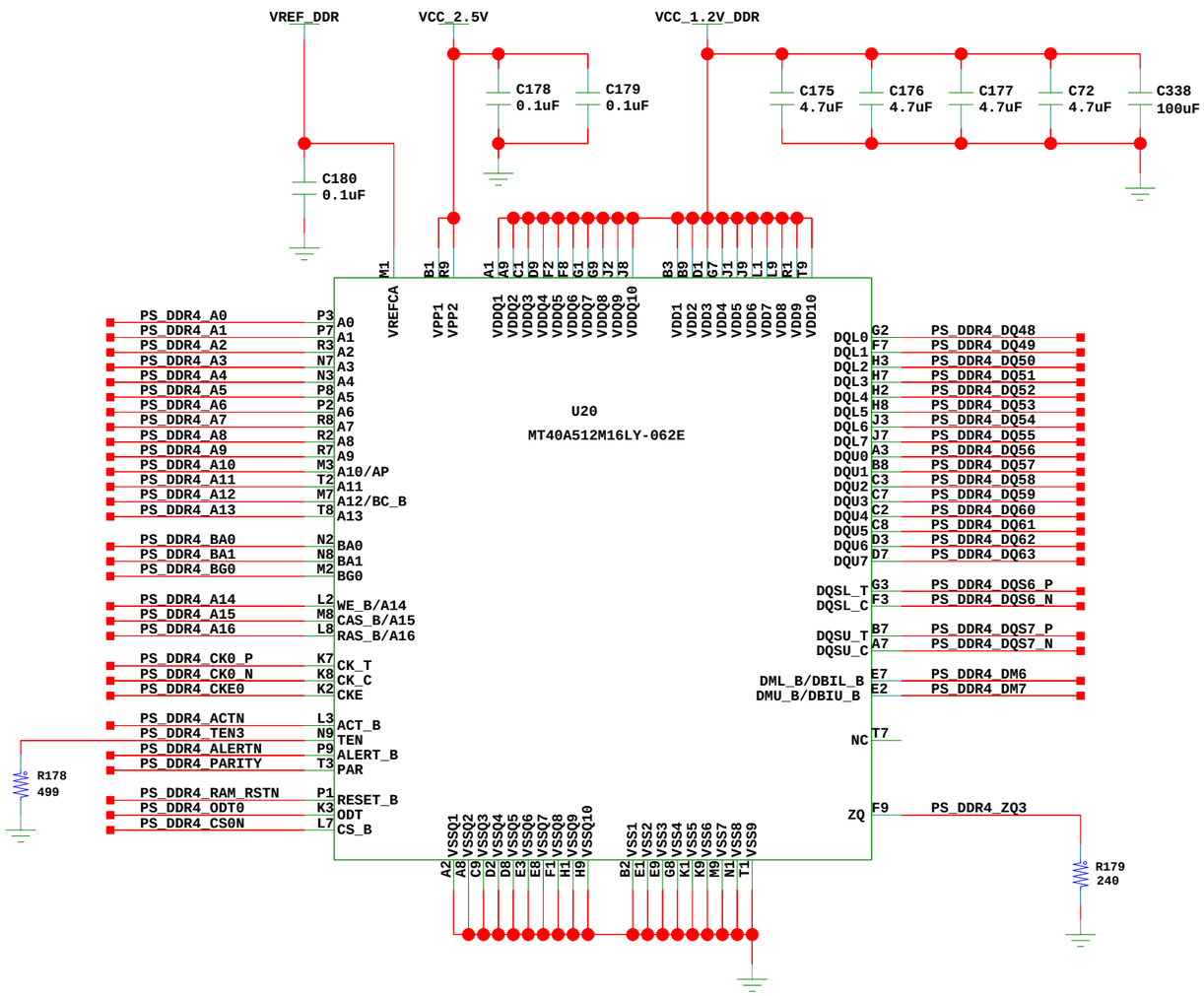

B	LT-EL-SR-EU-BPM-0614-03	2
SHEET SIZE	DRAWING/PART NUMBER	REVISION

ESH&Q RISK LEVEL A-3

SHEET 14 OF 31

PLL Clock Generator

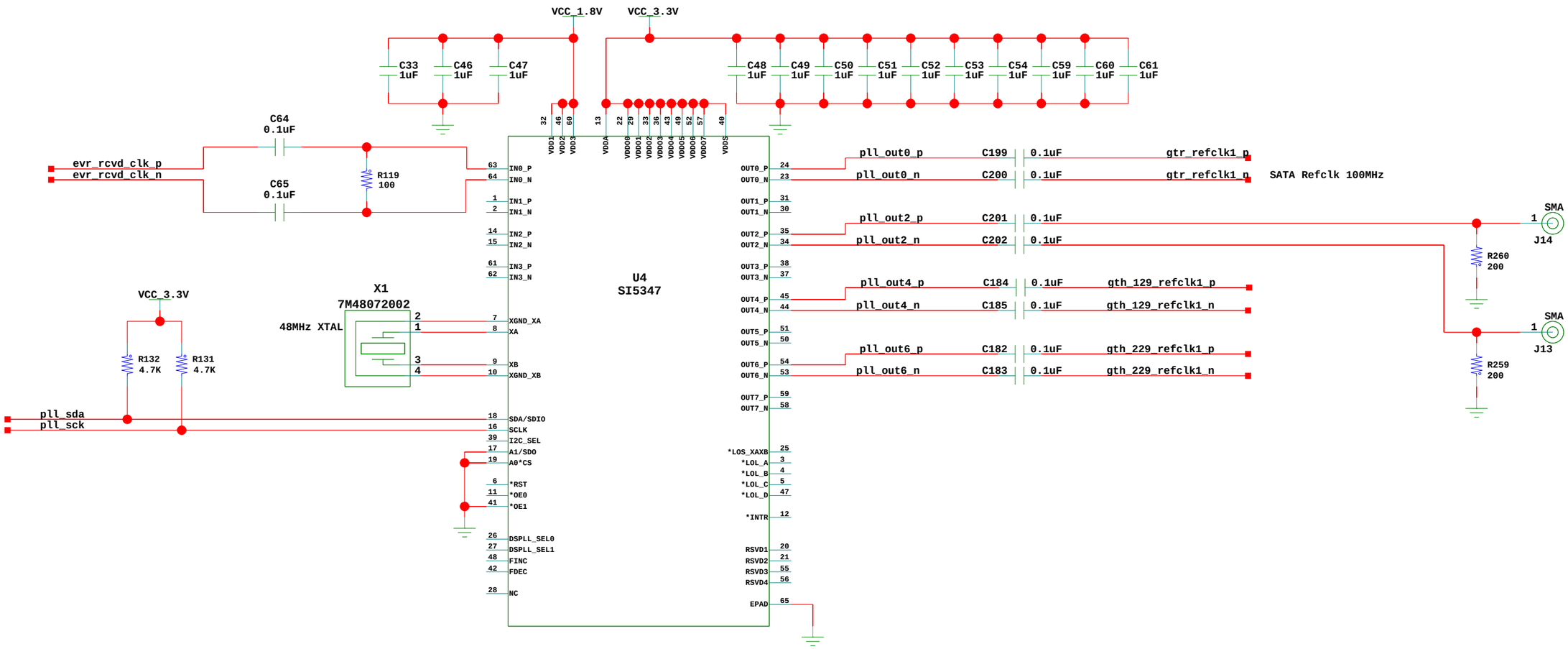

B	LT-EL-SR-EU-BPM-0614-03	2
SHEET SIZE	DRAWING/PART NUMBER	REVISION

ESH&Q RISK LEVEL A-3

SHEET 15 OF 31

SD card

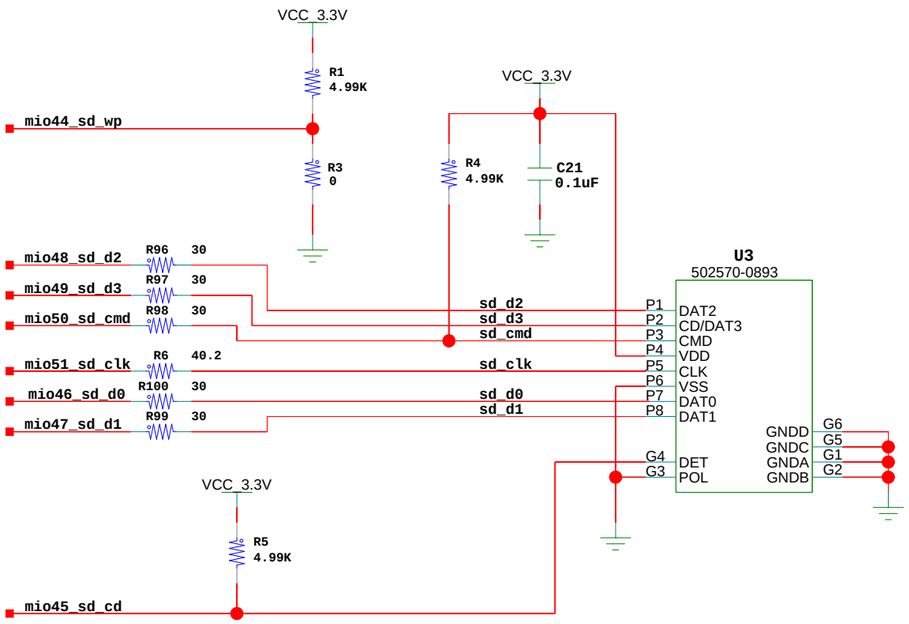

Serial Port

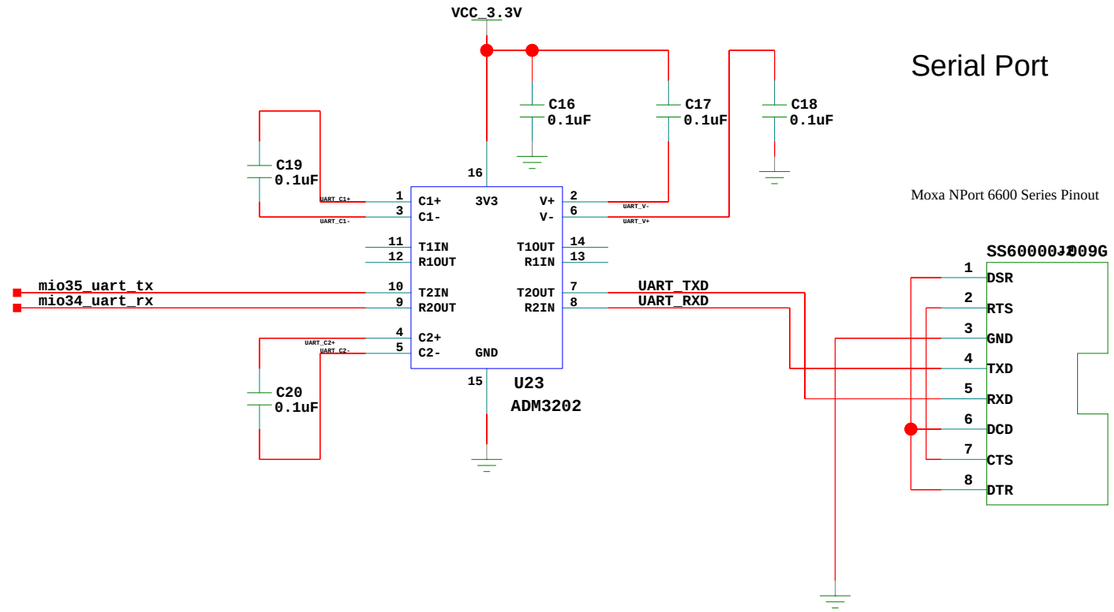

M.2 SATA

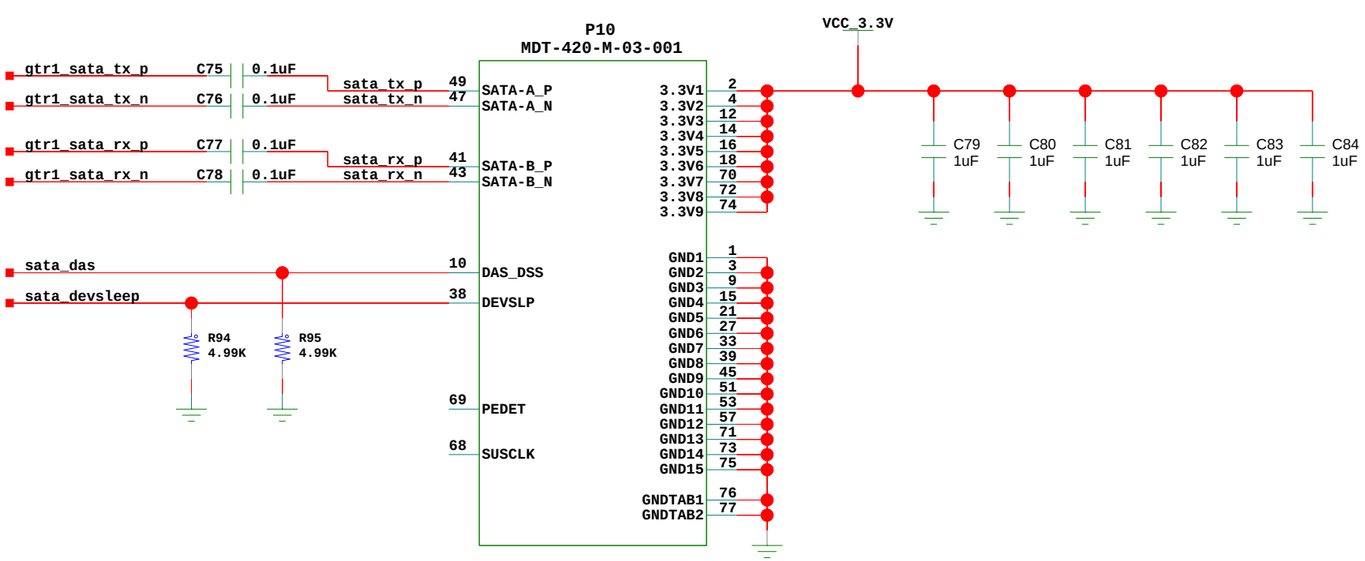

QSPI

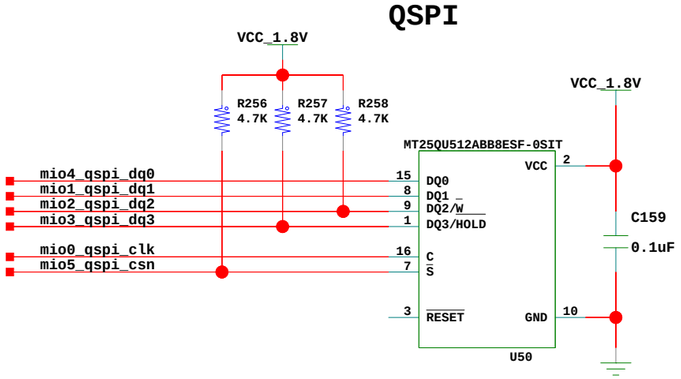

B	LT-EL-SR-EU-BPM-0614-03	2
SHEET SIZE	DRAWING/PART NUMBER	REVISION

ESH&Q RISK LEVEL A-3

SHEET 16 OF 31

Gigabit Ethernet PHY

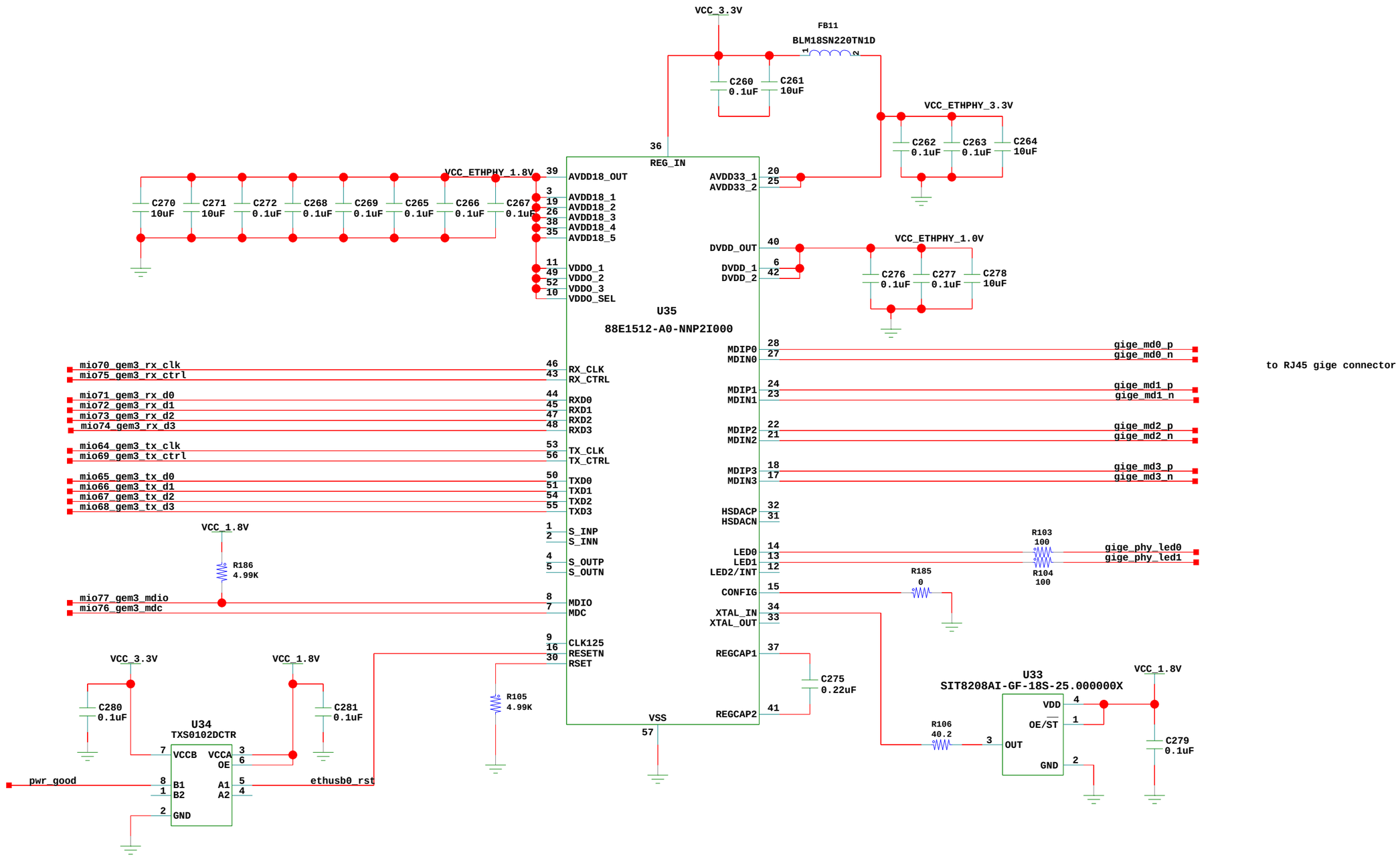

B	LT-EL-SR-EU-BPM-0614-03	2
SHEET SIZE	DRAWING/PART NUMBER	REVISION

ESH&Q RISK LEVEL A-3

SHEET 17 OF 31

USB PHY

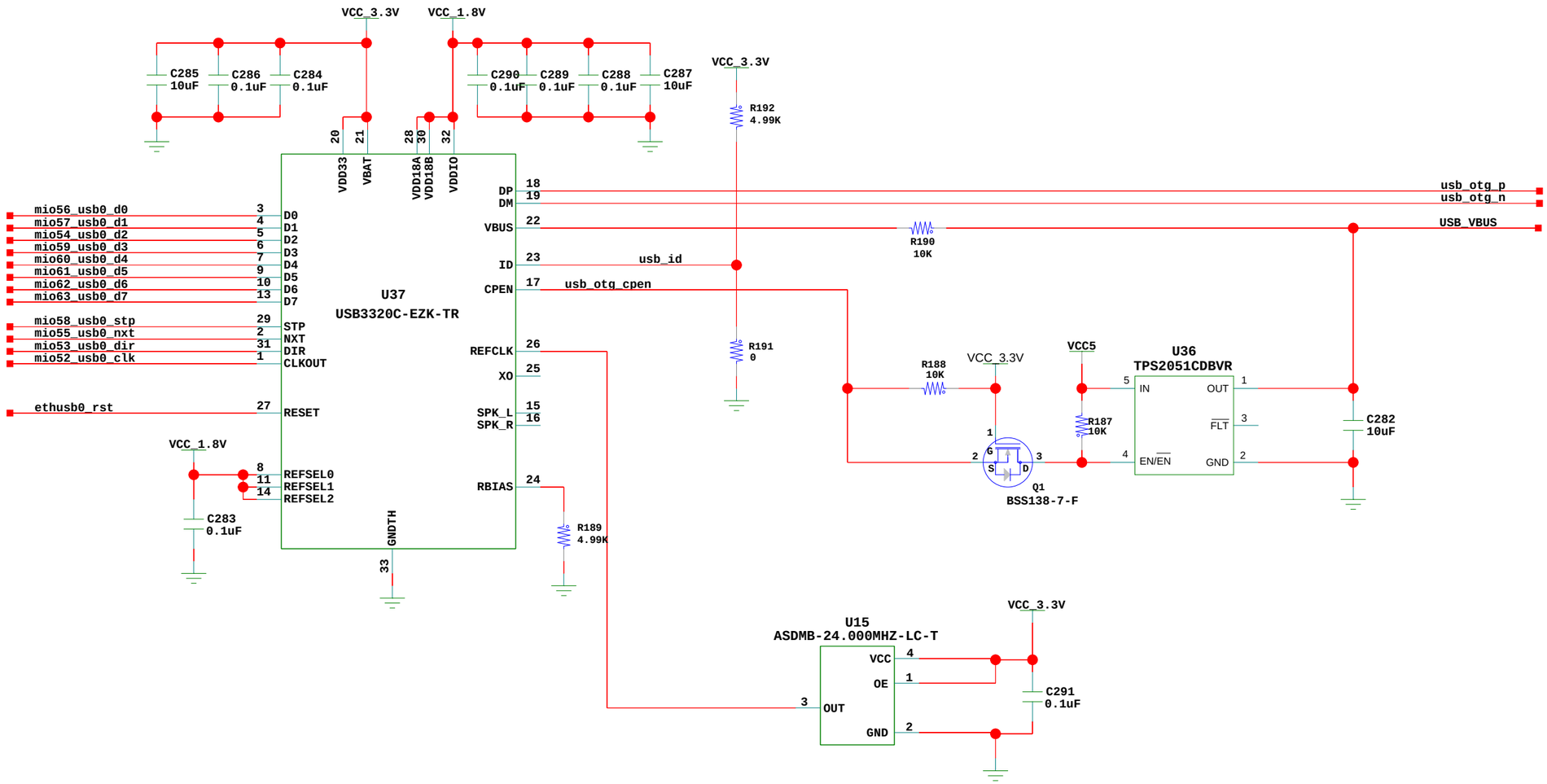

B	LT-EL-SR-EU-BPM-0614-03	2
SHEET SIZE	DRAWING/PART NUMBER	REVISION

ESH&Q RISK LEVEL A-3

SHEET 18 OF 31

Gigabit Ethernet / USB Connector

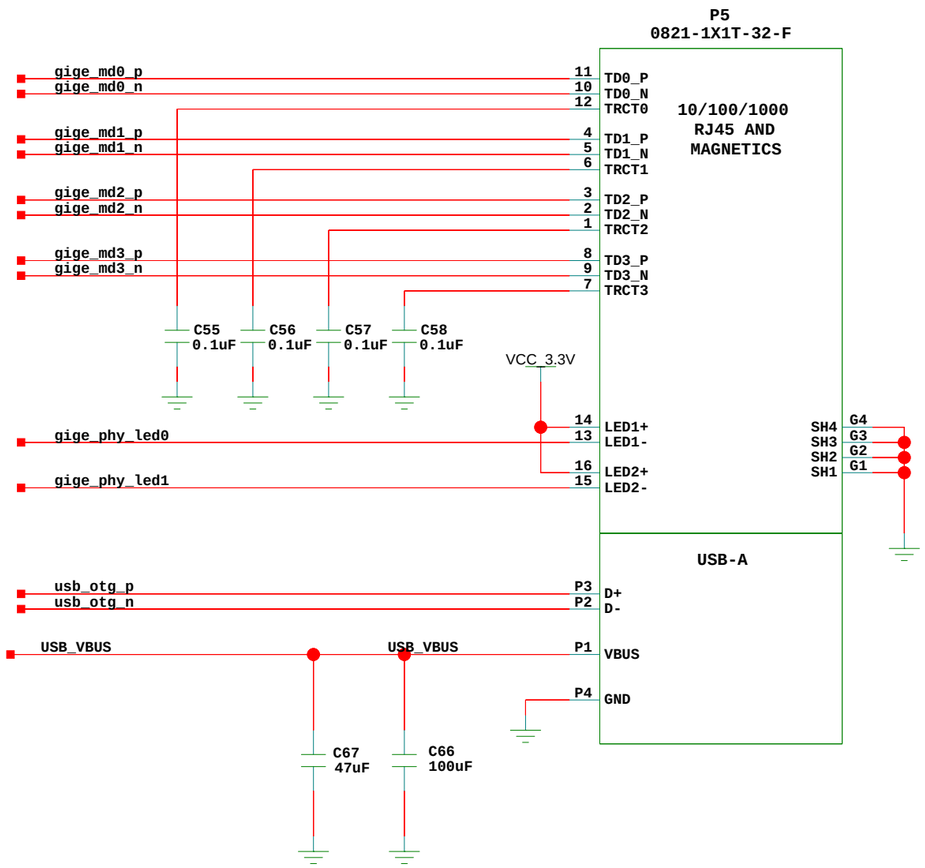

B	LT-EL-SR-EU-BPM-0614-03	2
SHEET SIZE	DRAWING/PART NUMBER	REVISION

ESH&Q RISK LEVEL A-3

SHEET 19 OF 31

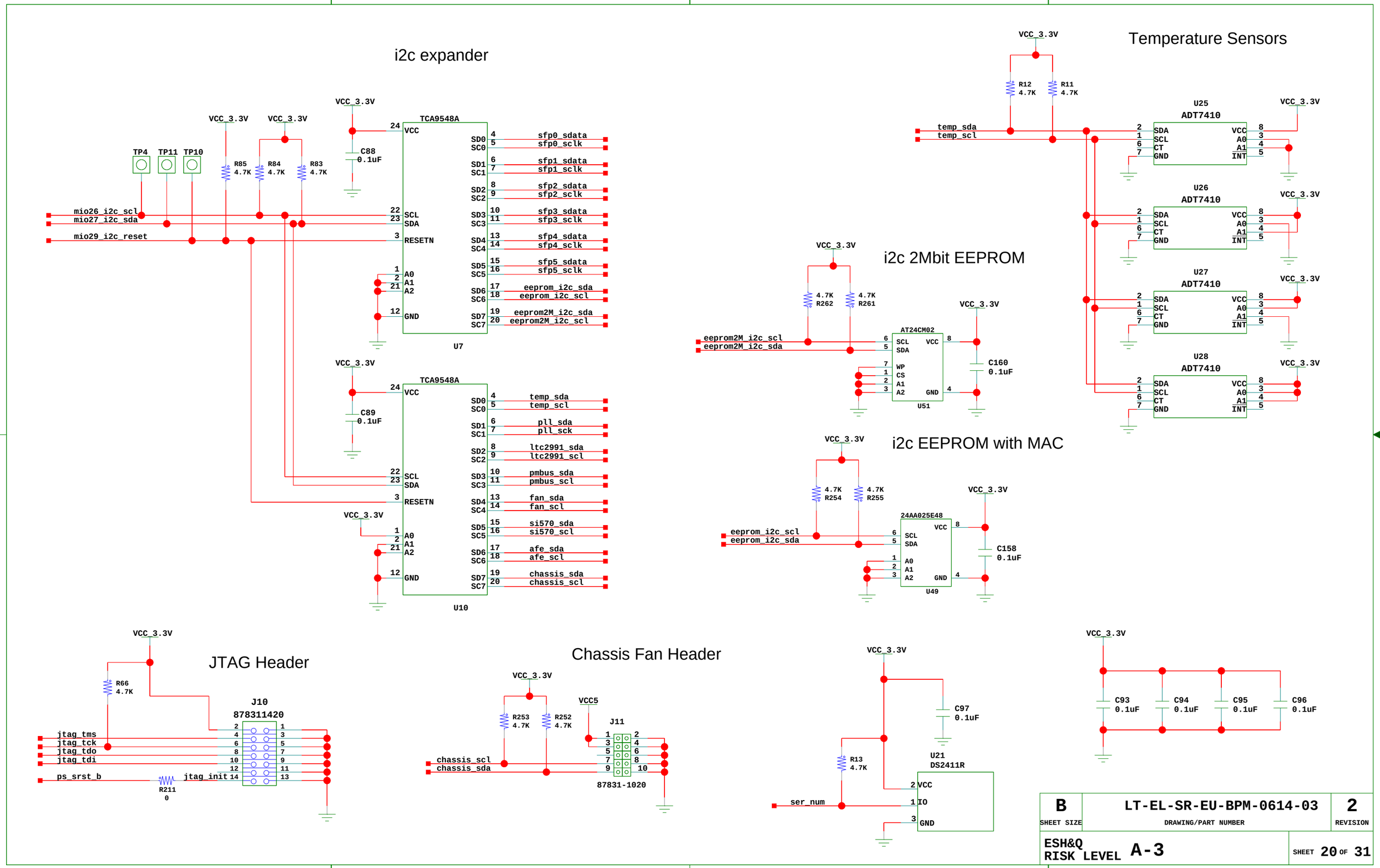

B	LT-EL-SR-EU-BPM-0614-03	2
SHEET SIZE	DRAWING/PART NUMBER	REVISION

ESH&Q RISK LEVEL A-3

SHEET 20 OF 31

6 gang SFP connector

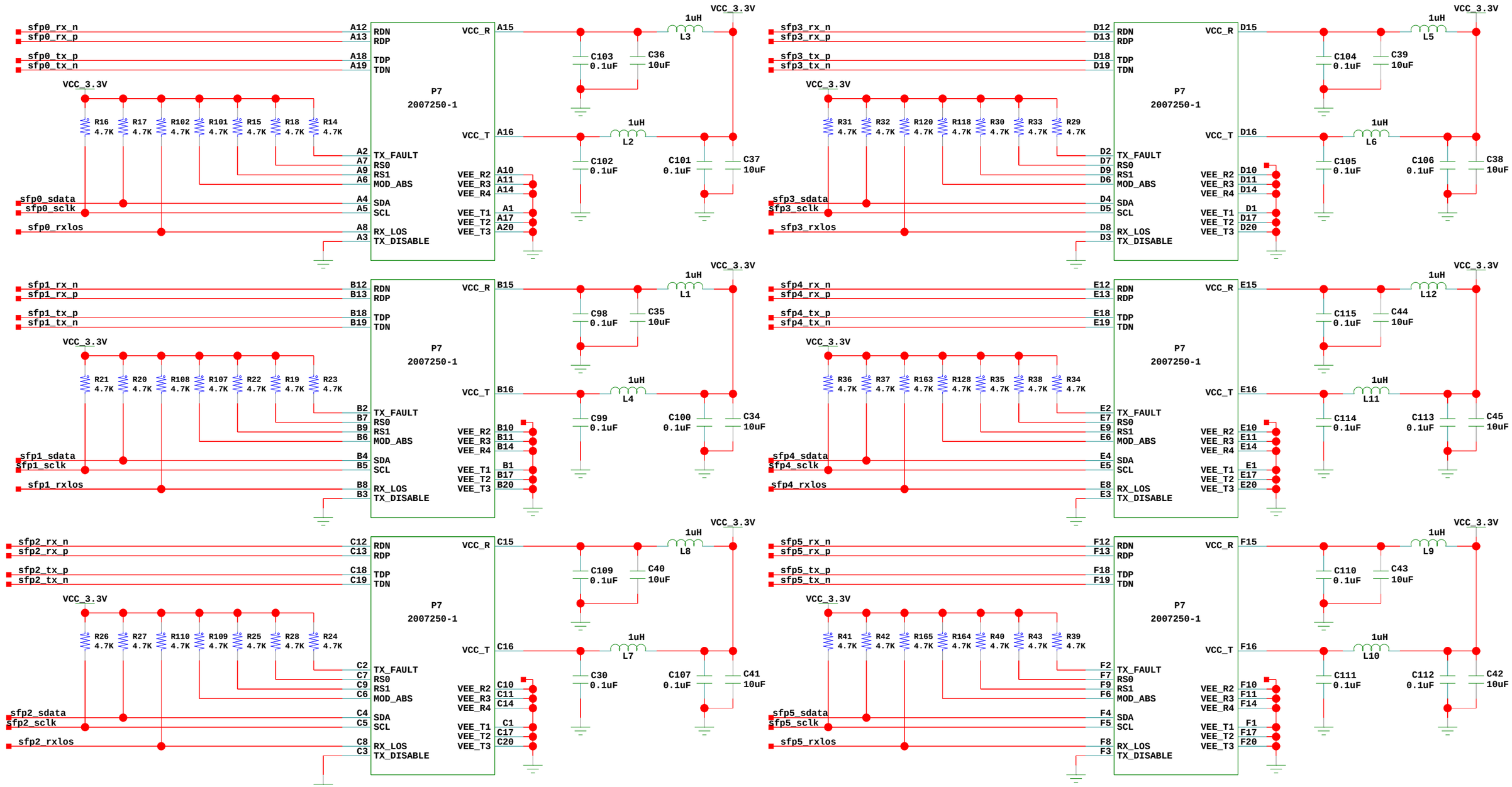

B	LT-EL-SR-EU-BPM-0614-03	2
SHEET SIZE	DRAWING/PART NUMBER	REVISION

ESH&Q RISK LEVEL A-3

SHEET 21 OF 31

LED's, Debug Header, Fan Speed

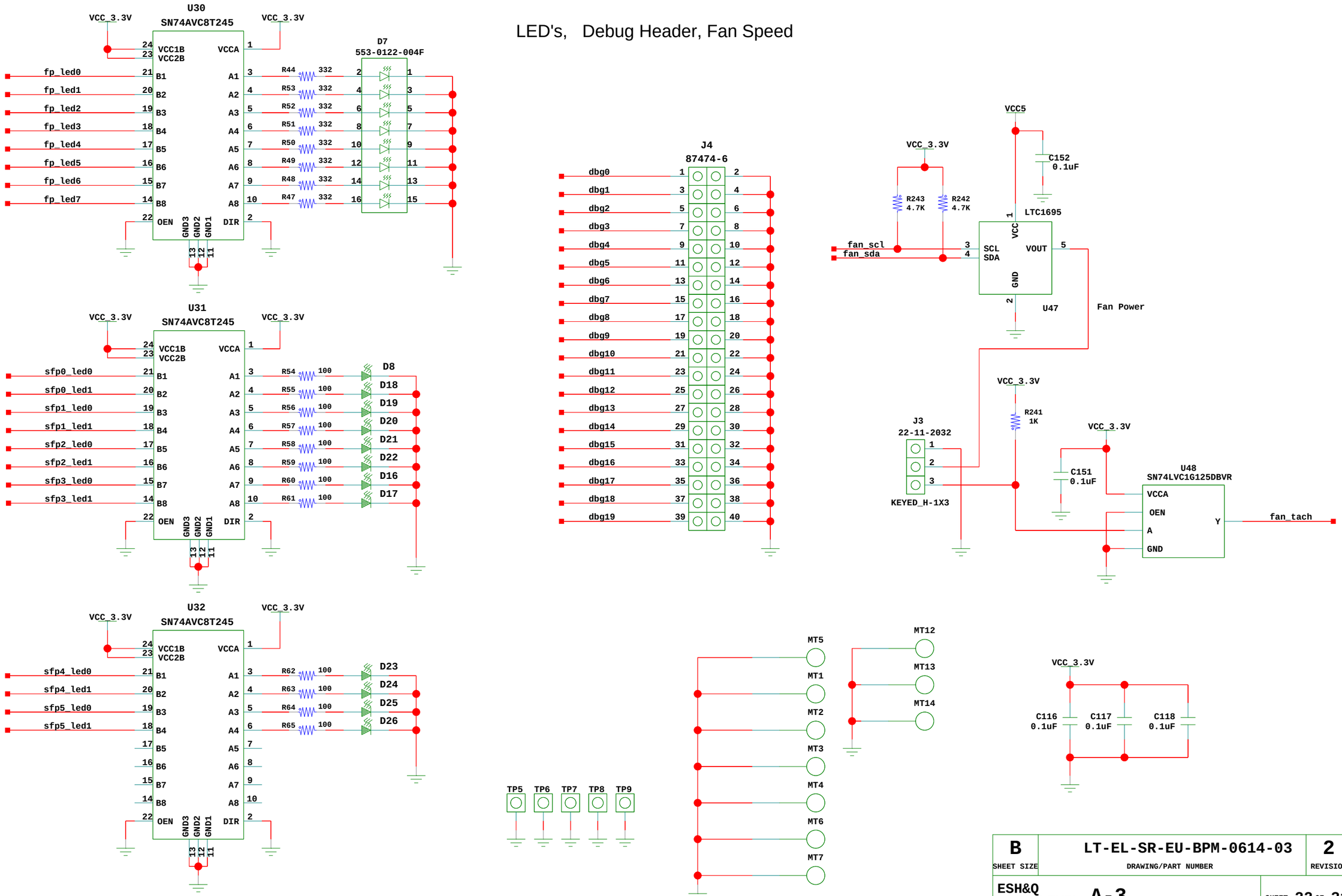

B	LT-EL-SR-EU-BPM-0614-03	2
SHEET SIZE	DRAWING/PART NUMBER	REVISION

ESH&Q RISK LEVEL A-3

SHEET 22 OF 31

Front panel LEMO I/O
4 inputs, 4 outputs

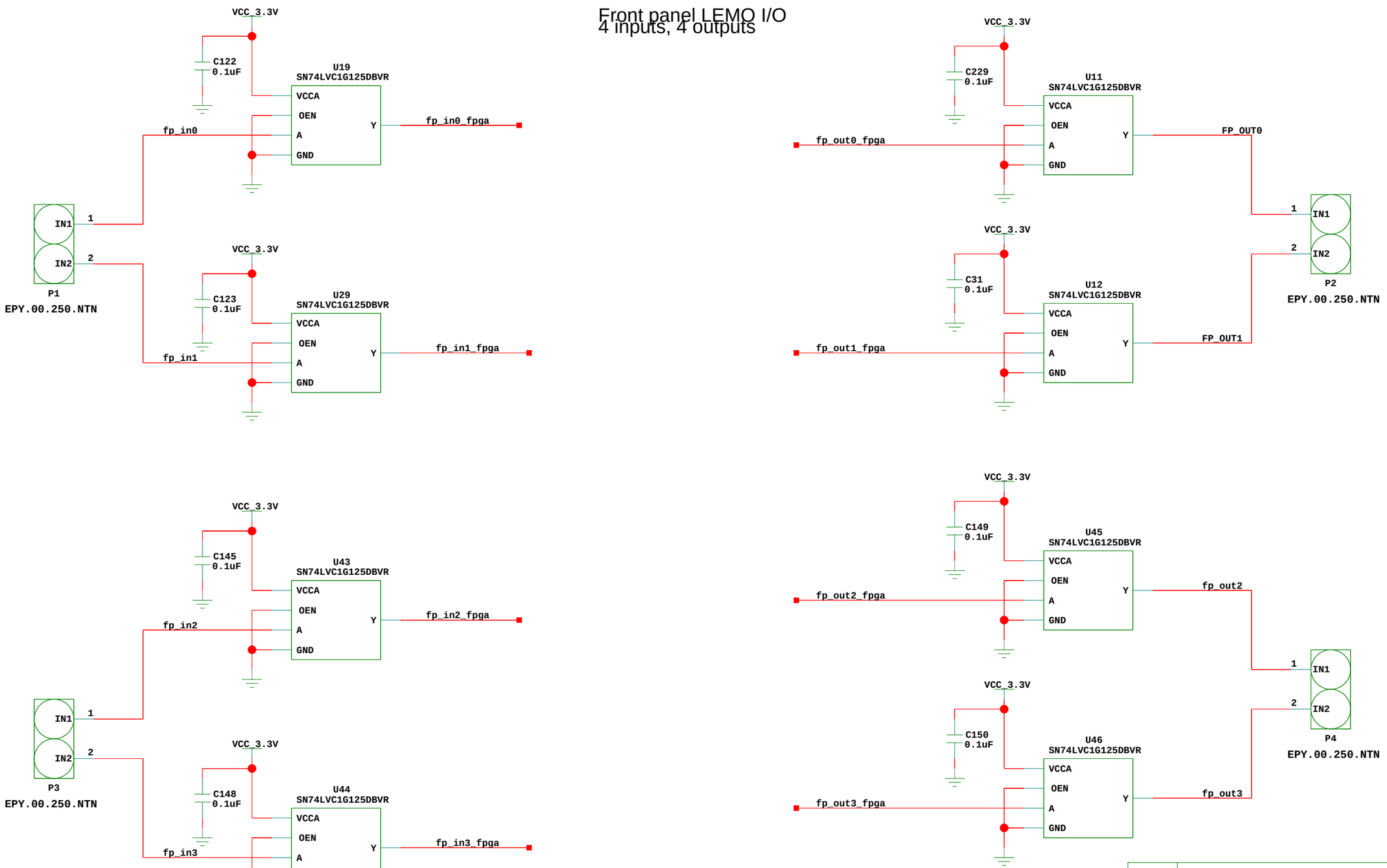

B	LT-EL-SR-EU-BPM-0614-03	2
SHEET SIZE	DRAWING/PART NUMBER	REVISION

ESH&Q RISK LEVEL A-3

SHEET 23 OF 31

AFE Connectors

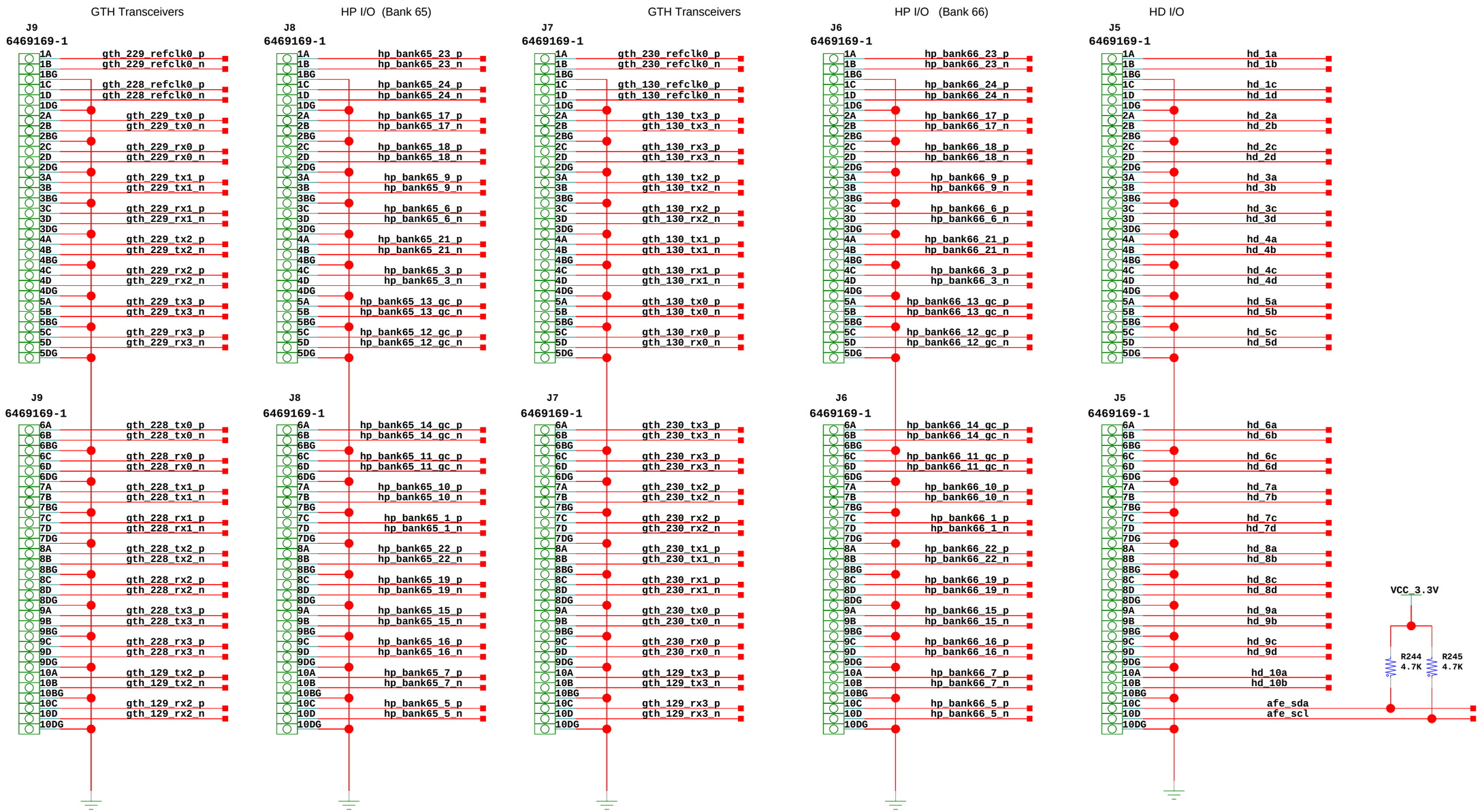

B	LT-EL-SR-EU-BPM-0614-03	2
SHEET SIZE	DRAWING/PART NUMBER	REVISION

ESH&Q RISK LEVEL A-3

SHEET 24 OF 31

Regulator Configuration

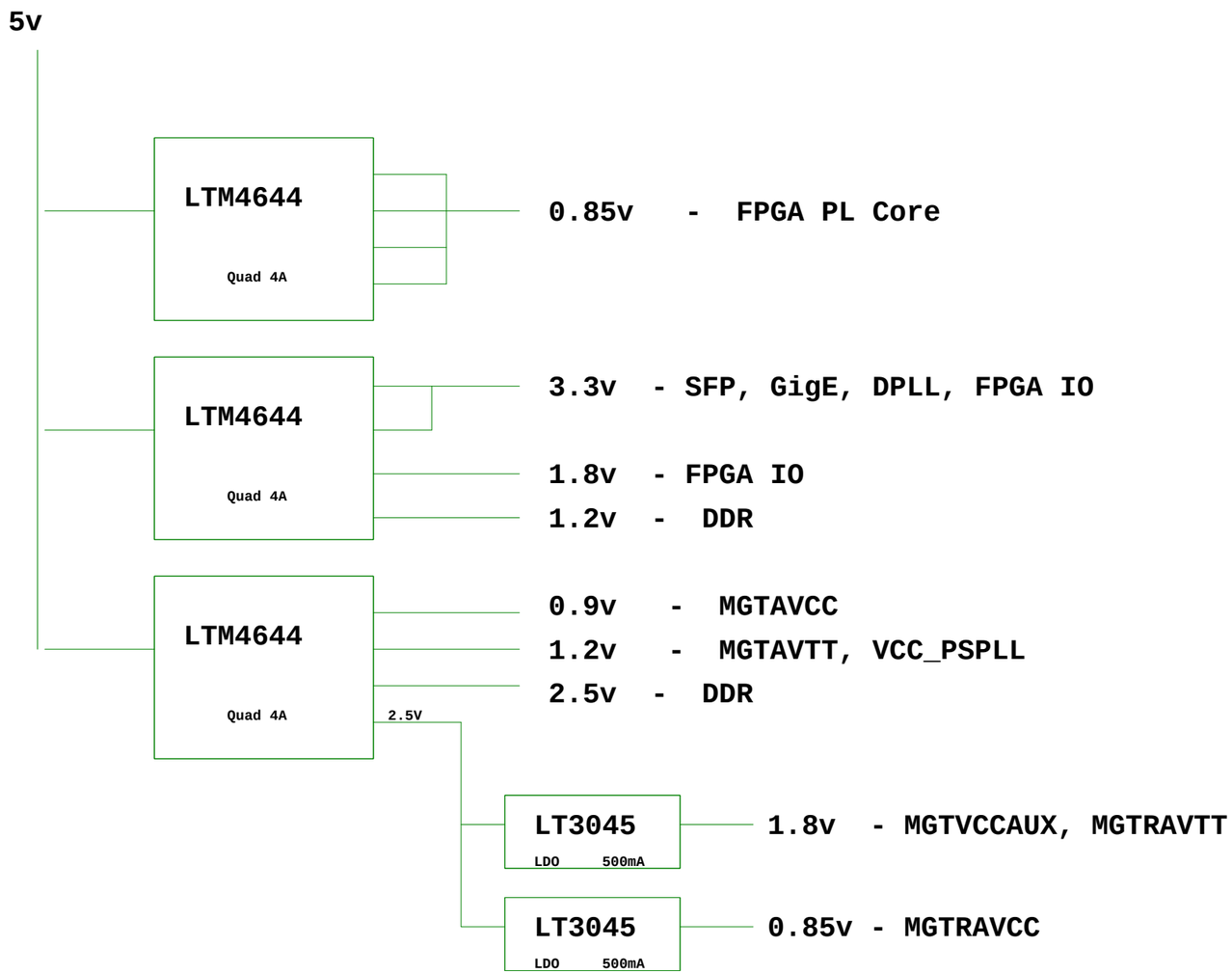

B SHEET SIZE	LT-EL-SR-EU-BPM-0614-03 DRAWING/PART NUMBER	2 REVISION
ESH&Q RISK LEVEL A-3		SHEET 25 OF 31

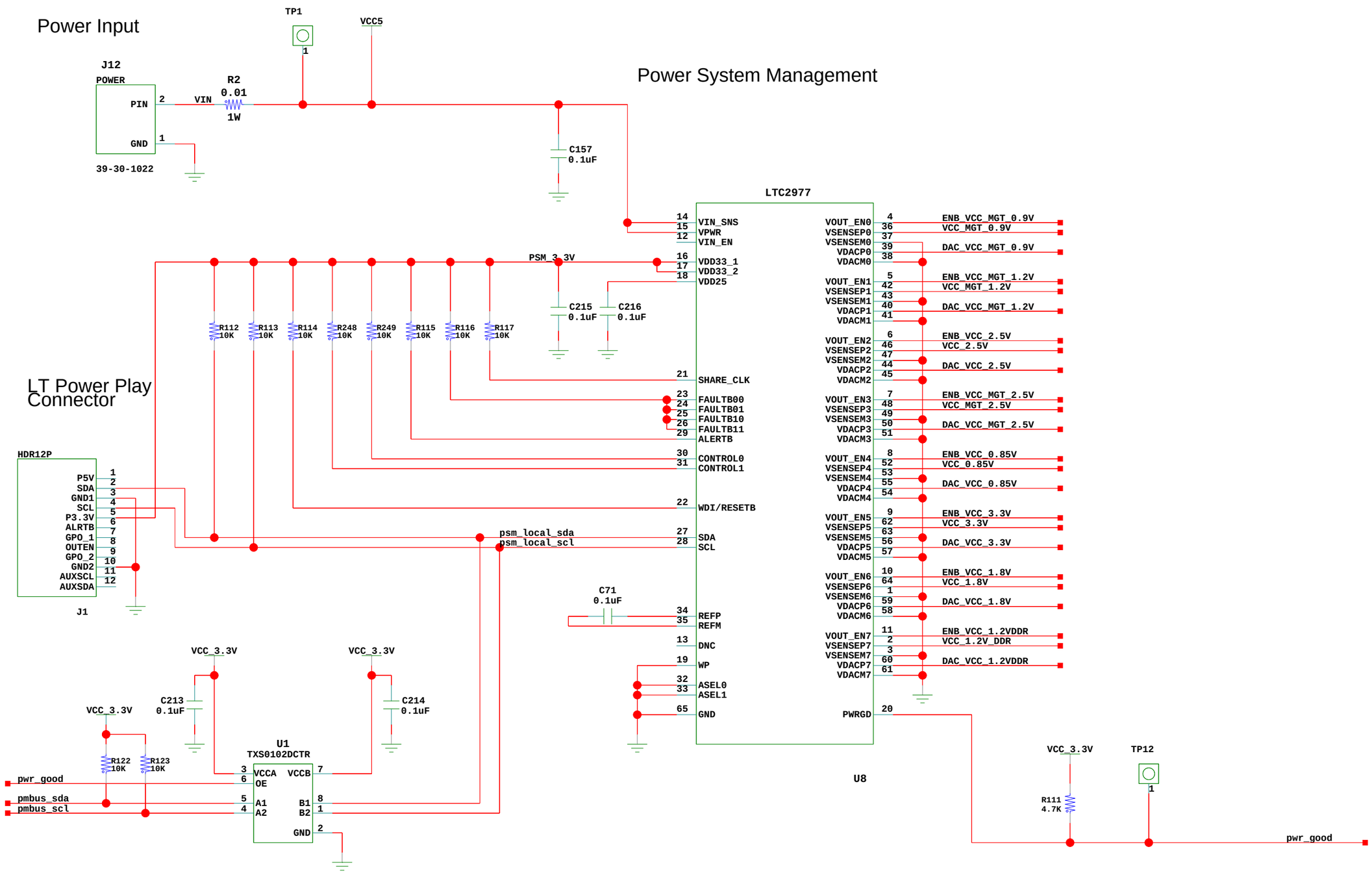

B	LT-EL-SR-EU-BPM-0614-03	2
SHEET SIZE	DRAWING/PART NUMBER	REVISION

ESH&Q RISK LEVEL A-3

SHEET 26 OF 31

Regulators: MGT / MGTR

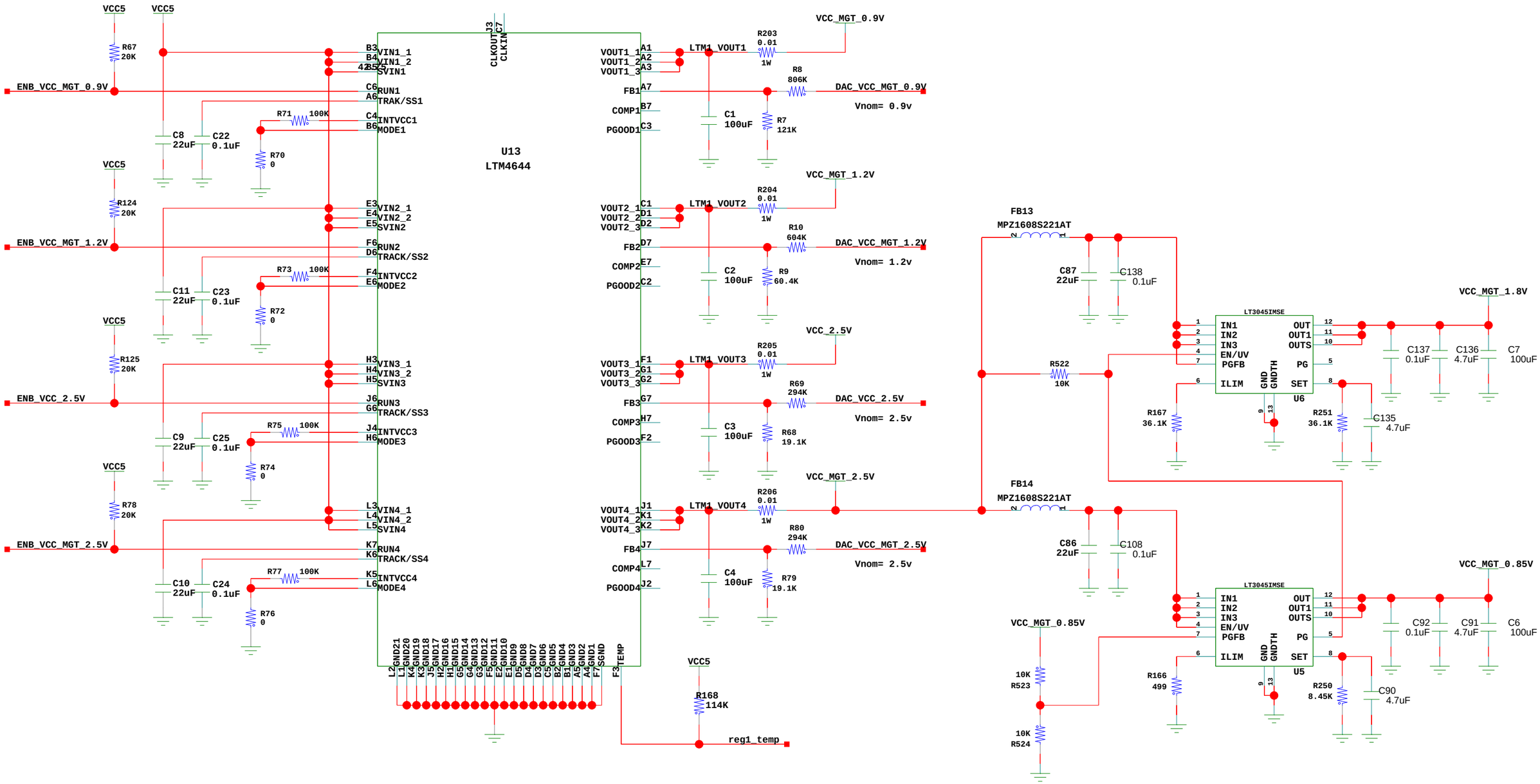

B	LT-EL-SR-EU-BPM-0614-03	2
SHEET SIZE	DRAWING/PART NUMBER	REVISION

ESH&Q RISK LEVEL A-3

SHEET 27 OF 31

Regulators: DDR4 ,3.3v, 1.8v

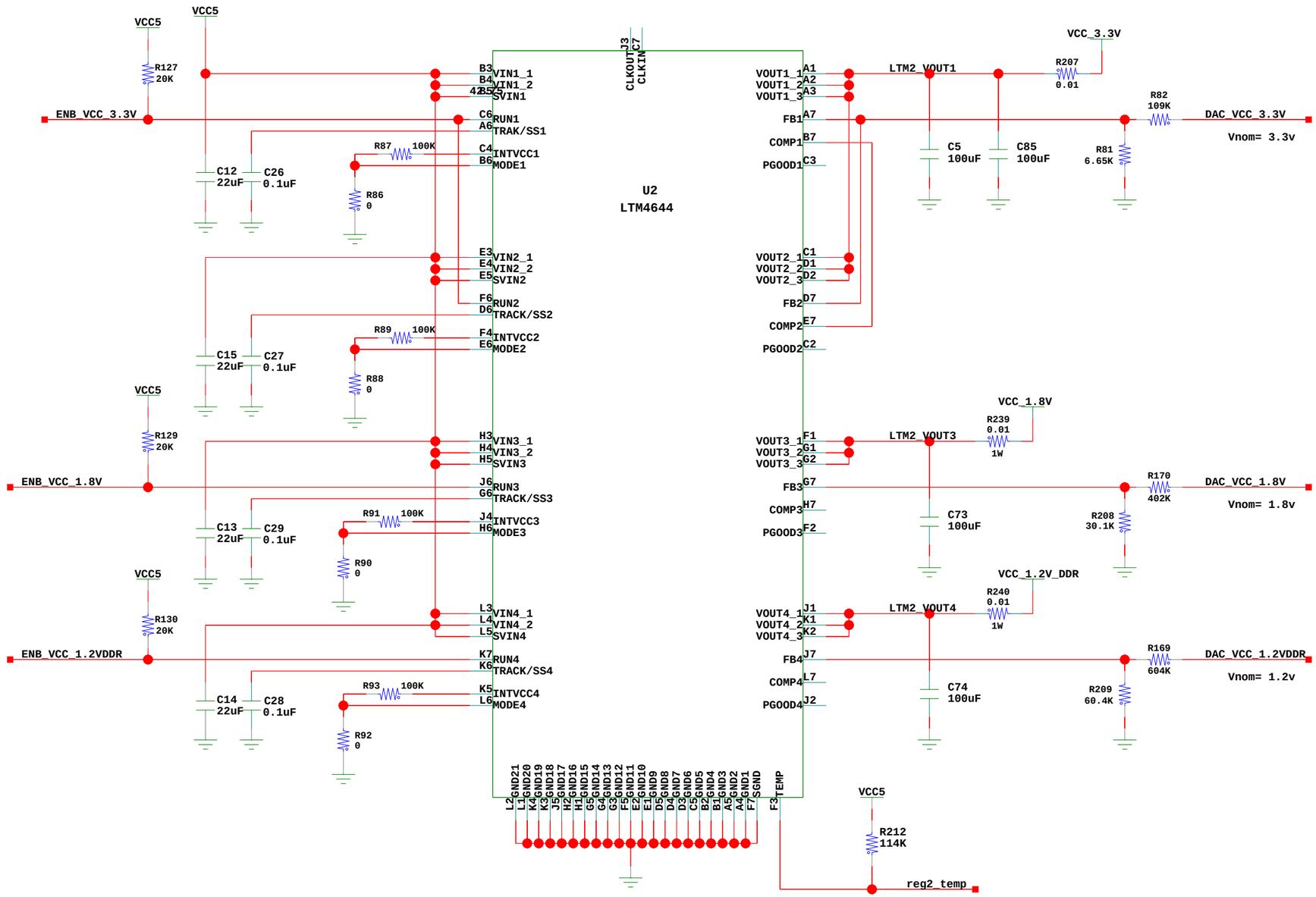

B	LT-EL-SR-EU-BPM-0614-03	2
SHEET SIZE	DRAWING/PART NUMBER	REVISION

ESH&Q RISK LEVEL A-3

SHEET 28 OF 31

Regulators: PL/PS Core

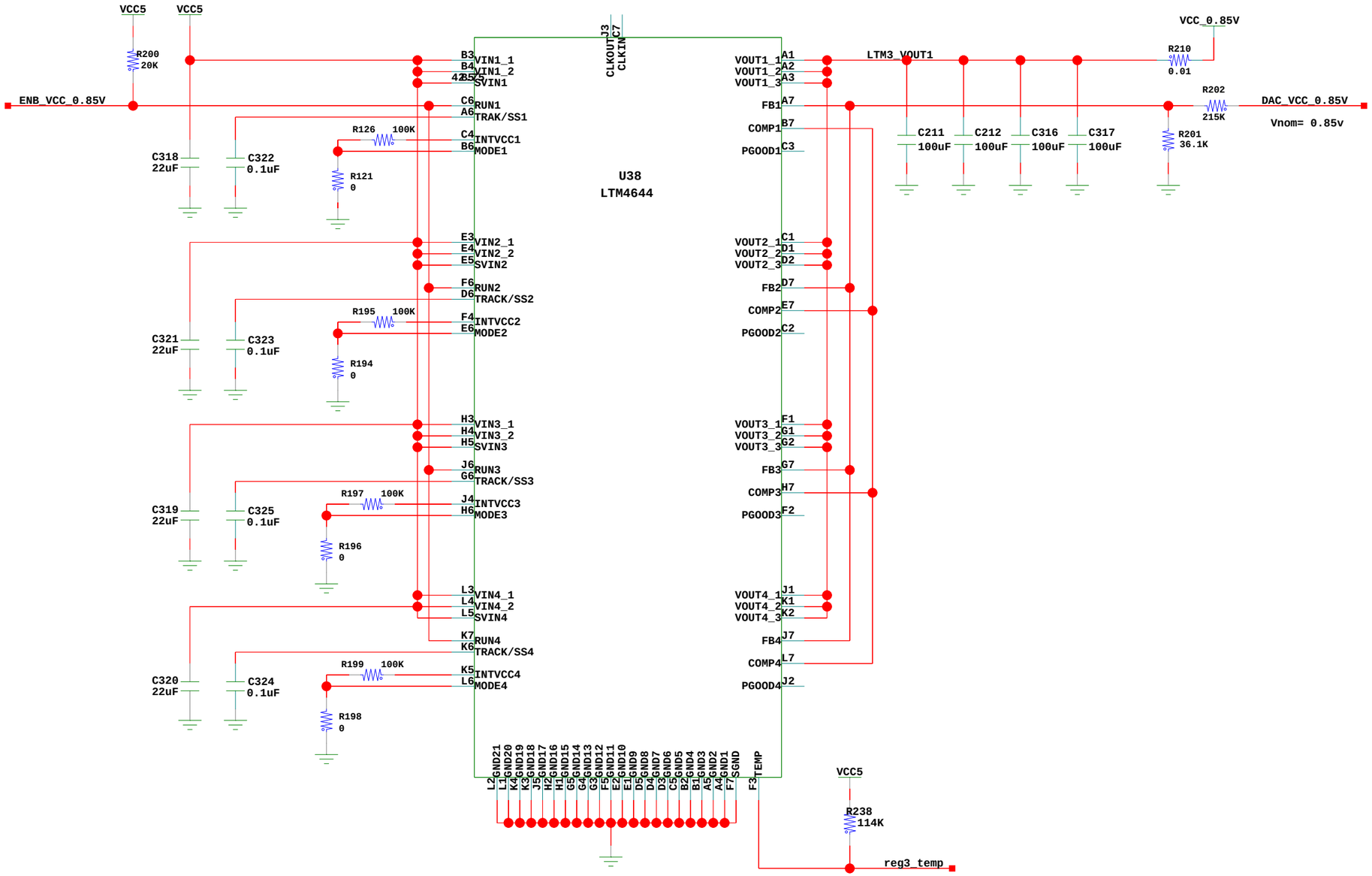

B	LT-EL-SR-EU-BPM-0614-03	2
SHEET SIZE	DRAWING/PART NUMBER	REVISION

ESH&Q RISK LEVEL A-3

SHEET 29 OF 31

Regulators: DDR4 Termination Voltage

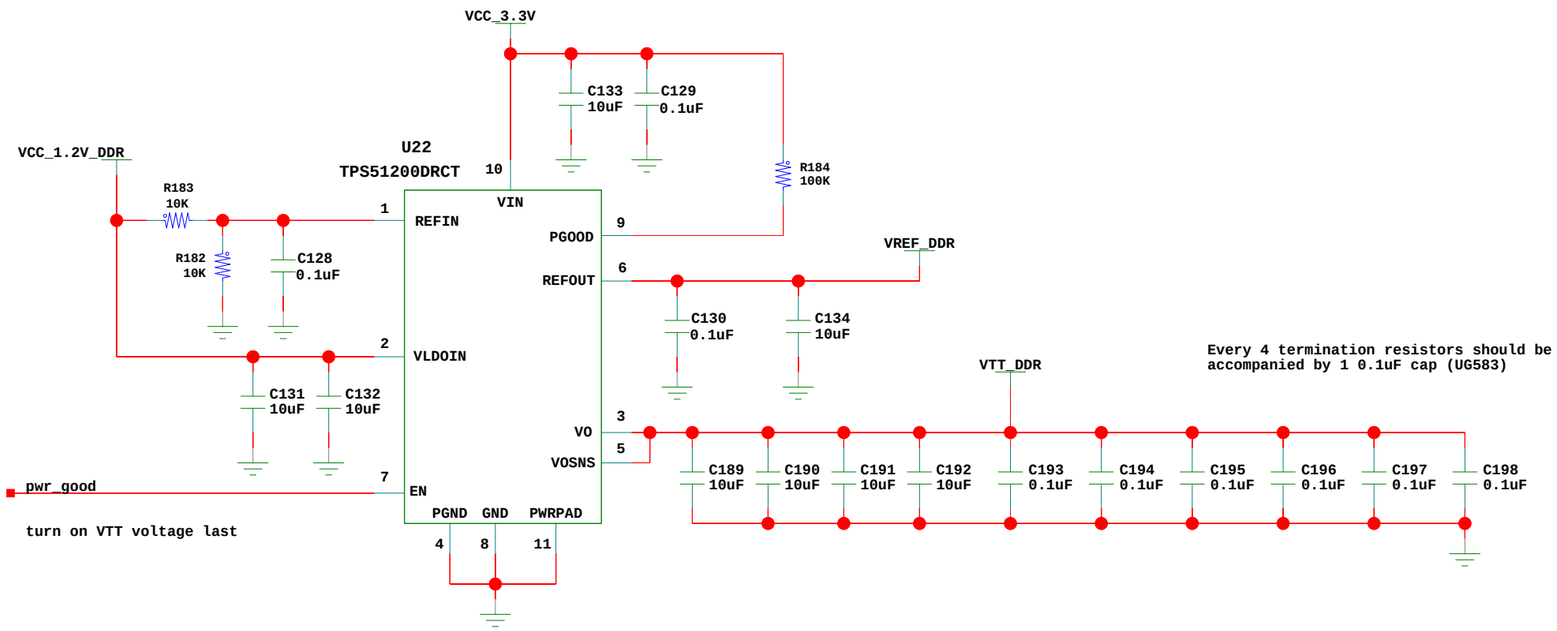

B	LT-EL-SR-EU-BPM-0614-03	2
SHEET SIZE	DRAWING/PART NUMBER	REVISION

ESH&Q RISK LEVEL A-3

SHEET 30 OF 31

Regulators: Current Measurement

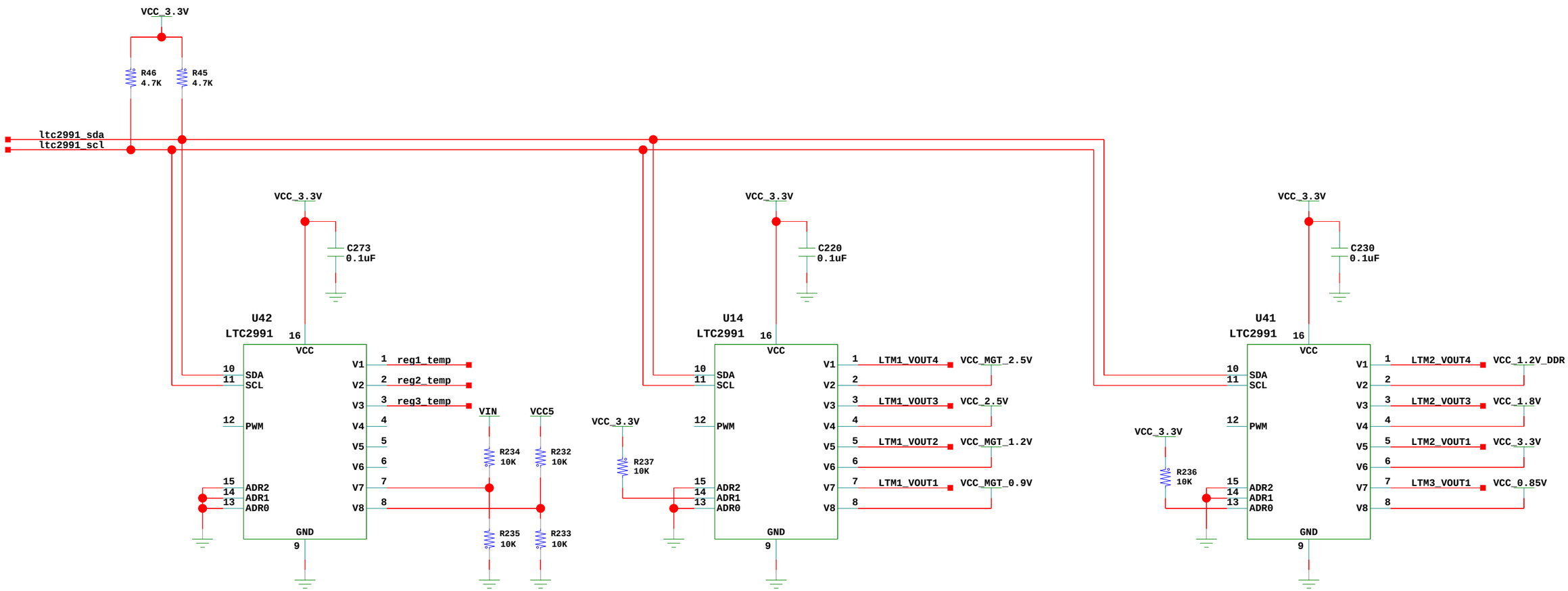

B	LT-EL-SR-EU-BPM-0614-03	2
SHEET SIZE	DRAWING/PART NUMBER	REVISION

ESH&Q RISK LEVEL A-3

SHEET 31 OF 31