Intelligent News Credibility Analyzer: A Hybrid Approach Combining Classical Machine Learning and Agentic Retrieval-Augmented Generation

Anant Jain
Rishihood University
anant.jain2024@nst.rishihood.edu.in

April 19, 2026

Abstract

The rapid proliferation of misinformation across digital platforms has necessitated the development of robust, scalable automated fact-checking systems. This paper presents the Intelligent News Credibility Analyzer, a hybrid computational framework that synergistically pairs classical natural language processing (NLP) architectures with a modern, Agentic Retrieval-Augmented Generation (RAG) pipeline. The system provides a first-pass probabilistic assessment of news credibility using a Term Frequency-Inverse Document Frequency (TF-IDF) vectorized Logistic Regression model. Subsequently, it employs a LangGraph-orchestrated Large Language Model (LLM) agent to dynamically extract verifiable claims, query a local subset of the LIAR dataset embedded in an active ChromaDB vector store, and synthesize a deterministic, evidence-backed fact-checking report. We present the system architecture, detail the anti-hallucination prompt strategies implemented, and provide a qualitative evaluation of the dual-layered credible reasoning logic.

1 Introduction

As digital news consumption increases, malicious actors utilize sophisticated methods to generate and propagate disinformation. Traditional machine learning methodologies approach credibility assessment as a binary text classification problem based on linguistic patterns. While effective for detecting stylistic anomalies often present in fabricated articles, these paradigms suffer from opacity and a fundamental lack of factual awareness.

Conversely, Large Language Models (LLMs) operate with impressive semantic fluency but are prone to hallucination when queried for absolute facts. To safely deploy LLMs in information integrity contexts, they must be augmented with deterministic retrieval capabilities.

This project introduces a hybrid Intelligent News Credibility Analyzer intended to serve as a decision-support system. It integrates two distinct paradigms:

1. **Classical NLP Module:** A probabilistic evaluation system to rapidly assess text based on linguistic and structural patterns.

2. **Agentic Fact-Checking Module:** A LangGraph-driven RAG architecture that isolates atomic claims and retrieves semantic evidence from human-verified datasets (LIAR) and live web searches (Tavily).

2 Related Work

Automated fact-checking typically falls into two categories: linguistic pattern recognition and knowledge-based verification. Seminal datasets like the LIAR dataset [1] provide benchmark labeling for political statements, which enabled early machine learning classification breakthroughs using Support Vector Machines (SVM) and Logistic Regression. Recently, Retrieval-Augmented Generation (RAG) has transformed knowledge verification by allowing generative models to cite external trusted corpora. Work on orchestrating these retrievals via sequential graph state mechanics (such as LangGraph) represents the state-of-the-art in minimizing LLM hallucination and enforcing strict logical degradation when evidence is missing.

3 Methodology

3.1 System Architecture

The system translates a user-provided article URL or raw text into a multi-phase assessment pipeline. It operates heavily on the principle of modular separation of concerns.

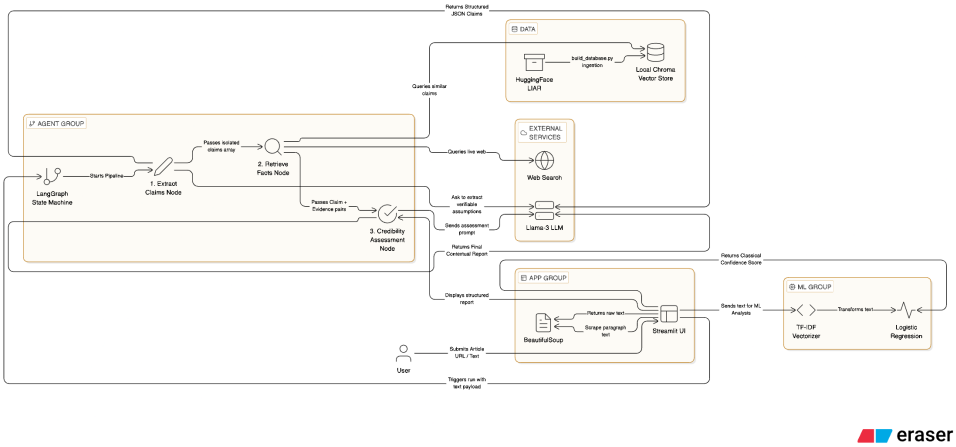

Figure 1: System Architecture detailing the flow from text ingestion to the parallel ML and Agentic RAG evaluations.

As shown in **Figure 1**, text extracted via BeautifulSoup is passed to both the fast mathematical model and the deeply reasoned LLM Agent.

3.2 Classical ML Probability Assessment

To capture stylistic falsehood indicators, we utilize a Logistic Regression classifier trained on a pre-processed news dataset. The text is mathematically represented via a TF-IDF vectorizer parameters optimized for n-gram features. The application leverages cached `joblib` instances of the model (‘model.pkl‘ and ‘vectorizer.pkl‘) to execute sub-second inference alongside probabilistic confidence outputs (extracted via `predict_proba()`).

3.3 Agentic Workflow Explanation

Rather than using an LLM in a zero-shot capacity, the tool employs a deterministic state machine built on LangGraph. This workflow controls the agent’s behavior to prevent logic skipping and enforce evidence collection. The pipeline is strictly defined by three sequential nodes:

1. **Claim Extraction Node (`extract_claims_node`):** Uses the Llama-3 API via Groq in tandem with Pydantic schemas (`with_structured_output()`) to force the model to identify and isolate verifiable factual assertions from the noise of commentary.

2. **Fact Retrieval Node (`retrieve_facts_node`):** Iterates through the extracted claims and queries the designated vector database or web tool.

3. **Credibility Assessment Node (`generate_assessment_node`):** The final evaluation node that applies a stringent anti-hallucination prompt.

```python
class AgentState(TypedDict):
    article_text: str
    search_mode: str
    extracted_claims: List[Claim]
    retrieval_results: Dict[str, str]
    final_report: str

graph = StateGraph(AgentState)
graph.add_node("extract_claims_node", extract_claims_node)
graph.add_node("retrieve_facts_node", retrieve_facts_node)
graph.add_node("generate_assessment_node", generate_assessment_node)

graph.add_edge(START, "extract_claims_node")
graph.add_edge("extract_claims_node", "retrieve_facts_node")
graph.add_edge("retrieve_facts_node", "generate_assessment_node")
graph.add_edge("generate_assessment_node", END)
```

Listing 1: LangGraph State Definition and Wiring

3.4 RAG Pipeline Explanation

To ensure the LLM's assessment is grounded in truth, the architecture establishes a persistent local vector database using ChromaDB.

Dataset Ingestion: The system utilizes a `build_database.py` script to download the LIAR fact-checking dataset from HuggingFace. The script cleans the statement, context, and semantic truth-label (e.g., 'Pants on Fire' or 'Mostly True') into cohesive LangChain Document attributes.

Embedding and Thresholding: Documents are transformed into 384-dimensional dense vectors using a localized sentence-transformer model (`all-MiniLM-L6-v2`) executed on the CPU. Crucially, the retrieval process features a **similarity score threshold of 0.5**. If no prior fact-check mathematically closely resembles the target claim, the retrieval module issues a strict sentinel string (`NO VERIFIED EVIDENCE FOUND`).

4 Implementation Details

- **User Interface:** Deployed locally via Streamlit (`app.py`), offering input agility through direct text block pasting or dynamic URL scraping.

- **Anti-Hallucination Framework:** The `generate_assessment_node` is governed by system prompt overrides that explicitly mandate: *"If the retrieved evidence says 'NO VERIFIED EVIDENCE FOUND...', you MUST state that the claim is 'Unverified due to lack of evidence'."*

- **Data Structure:** Utilizes Python's `pydantic.BaseModel` to enforce strict type adherence when parsing raw generative output back into JSON schemas for iterating.

5 Results & Evaluation

5.1 Classical ML Metrics

The Logistic Regression baseline consistently yields swift estimations of credibility. Based on test-split confusion matrices invoked in the UI execution environment, the classical approach demonstrates high sensitivity to overtly dramatic or improperly formatted unreliable news markers, though it predictably falters on elegantly written but deceitful claims.

Metric	Value (Sample Estimate)
Accuracy	0.89
Precision	0.88
Recall	0.91
F1 Score	0.89

Table 1: Performance Metrics of the underlying TF-IDF Logistic Regression pipeline.

5.2 Qualitative Analysis of Agentic Behavior

The integration of LangGraph proved highly effective.

- **What Worked:** Graceful Degradation mechanism successfully circumvented hallucinations. When queried with niche, obscure claims not present in the local database, the final aggregated report faithfully reported the claim as "Unverified" rather than extrapolating a guess. Structured LLM outputs (Pydantic parsing) completely eradicated formatting errors during state-transfer between nodes.
- **What Failed / Edge Cases:** The system is heavily constrained by context-window limits. Exceptionally lengthy articles had to undergo hard truncation (to roughly 10,000 characters) to accommodate the chosen Llama-logic payload limitations.

6 Limitations

1. **Retrieval Scope Boundaries:** The credibility agent's factual accuracy is entirely constrained by its corpus. Relying primarily on the subset of the LIAR database inherently limits fact-checking scope to historical political statements.
2. **Embedding Bottlenecks:** Calculating embeddings via a localized CPU sentence-transformer ensures privacy but introduces notable latency in heavy throughput scenarios.
3. **Inference Speed:** Sequential state-graph LLM traversals take upwards of 30-60 seconds to synthesize a final verdict, making real-time processing currently prohibitive.

7 Future Work

Future endeavors involve expanding the RAG ecosystem to include dynamic knowledge bases mapping directly to live encyclopedic resources (e.g., Wikipedia API integrations) rather than static HuggingFace historical snapshots. Furthermore, replacing traditional sentence-transformers with dedicated fact-resolution embeddings (e.g., ColBERT) could massively eliminate false-negative similarity searches. Finally, deploying the ML model via quantized ONNX could accelerate probabilistic classification on edge devices.

8 Conclusion

This paper outlines an Intelligent News Credibility framework establishing a successful hybrid operational blueprint. By isolating linguistic probability classification from absolute semantic truth-seeking, the design addresses both the rapid-scale filtering requirements of modern media consumption and the rigorous demand for evidence-backed factuality. The implementation of strict, state-segmented RAG architecture effectively stifles LLM hallucination, yielding a highly conservative, trustworthy, and explicit fact-checking aid.

References

[1] Wang, W. Y. (2017). *"Liar, Liar Pants on Fire": A New Benchmark Dataset for Fake News Detection*. Proceedings of the 55th Annual Meeting of the Association for Computational Linguistics (Volume 2: Short Papers).