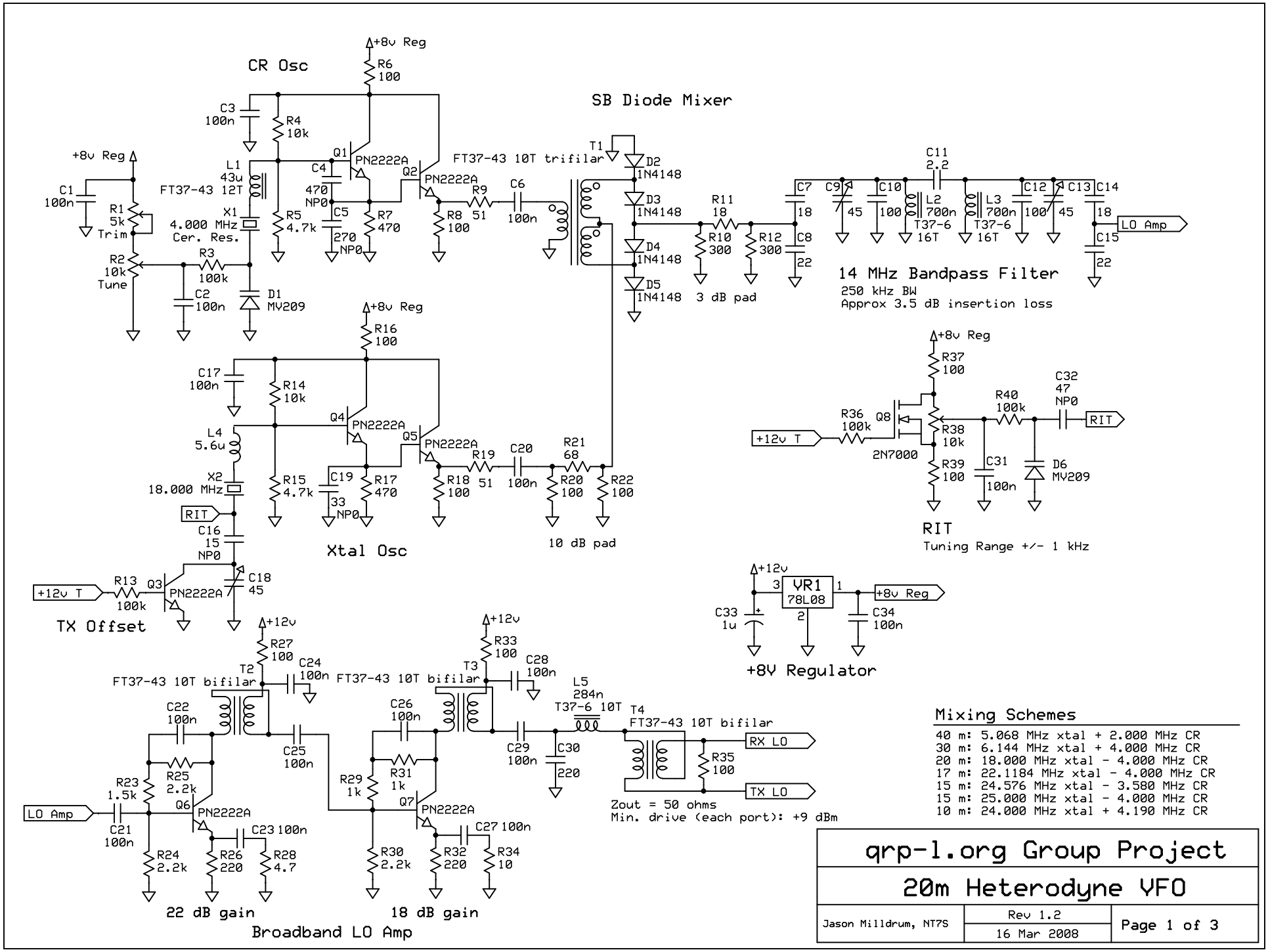
CR Osc
+8v Reg
R6 100
C3 100n
R4 10k
Q1 PN2222A
Q2 PN2222A
C4 470 NP0
C5 270 NP0
R5 4.7k
R7 470
R8 100
R9 51
C6 100n
L1 43u FT37-43 12T
X1 4.000 MHz Cer. Res.
C1 100n
R1 5k Trim
R2 10k Tune
R3 100k
C2 100n
D1 MV209
SB Diode Mixer
T1 FT37-43 10T trifilar
D2 1N4148
D3 1N4148
D4 1N4148
D5 1N4148
R10 300
R11 18
R12 300
3 dB pad
C7 18
C8 22
C9 45
C10 100
C11 2.2
L2 700n T37-6 16T
L3 700n T37-6 16T
C12 100
C13 45
C14 18
C15 22
LO Amp
14 MHz Bandpass Filter
250 kHz BW
Approx 3.5 dB insertion loss
R16 100
C17 100n
R14 10k
Q4 PN2222A
Q5 PN2222A
L4 5.6u
X2 18.000 MHz
R15 4.7k
C19 33 NP0
R17 470
R18 100
R19 51
C20 100n
R21 68
R20 100
R22 100
10 dB pad
Xtal Osc
RIT
C16 15 NP0
C18 45
+12v T
R13 100k
Q3 PN2222A
TX Offset
R37 100
R36 100k
Q8 2N7000
R38 10k
R39 100
R40 100k
C32 47 NP0
C31 100n
D6 MV209
RIT
Tuning Range +/- 1 kHz
+12v
YR1 78L08
C33 1u
C34 100n
+8V Regulator
R27 100
T2 FT37-43 10T bifilar
C24 100n
C22 100n
C25 100n
R25 2.2k
R23 1.5k
Q6 PN2222A
LO Amp
C21 100n
C23 100n
R24 2.2k
R26 220
R28 4.7
22 dB gain
R33 100
T3 FT37-43 10T bifilar
C28 100n
C26 100n
R31 1k
R29 1k
Q7 PN2222A
C27 100n
R30 2.2k
R32 220
R34 10
18 dB gain
Broadband LO Amp
L5 284n T37-6 10T
C29 100n
C30 220
T4 FT37-43 10T bifilar
R35 100
RX LO
TX LO
Zout = 50 ohms
Min. drive (each port): +9 dBm
Mixing Schemes
40 m: 5.068 MHz xtal + 2.000 MHz CR
30 m: 6.144 MHz xtal + 4.000 MHz CR
20 m: 18.000 MHz xtal - 4.000 MHz CR
17 m: 22.1184 MHz xtal - 4.000 MHz CR
15 m: 24.576 MHz xtal - 3.580 MHz CR
15 m: 25.000 MHz xtal - 4.000 MHz CR
10 m: 24.000 MHz xtal + 4.190 MHz CR
qrp-l.org Group Project
20m Heterodyne VFO
Jason Milldrum, NT7S
Rev 1.2
16 Mar 2008
Page 1 of 3