MAE Robotics Club

# Intro to Arduino

MAE Robotics Club

# If you are here early..

MAE Robotics Club

1. Download Arduino IDE: https://www.arduino.cc/en/Main/Software
2. Take an Arduino (the hardware) & Plug into computer
3. Open the  Arduino IDE, go to tools (on top), **select the Port according to your computer**

| MAC | WINDOWS |
|---|---|
| Multiple port options,<br>e.g. **/dev/cu.wchusbserial1430** | Should have only 1 port option,<br>e.g. **COM5** |

*If the port is **MISSING**, it means that you need a driver.*
*- Go to https://tinyurl.com/maerc-ch34x*
*- Download the link in under **"Solution 2"***

4. Download a **test program**
5. If your program loads on your arduino, you're good to go!

# HELLO WORLD

MAE Robotics Club

Katherine Kee, Wan Ting

Yr 1 CS

Dip. AMS

Passion: Robotics & Coding

Skipping Lectures,

Sleeping (Aggressively)

# Content

MAE Robotics Club

- Digital Logic – Nibbles, Bits, Bytes, ASCII, 1s & 0s
- Electrical Basics – Volt, Current, Resistors
- What is an Arduino (vs RPi) – Family, Components
- IDE – Serial Commands & Coding Constructs

- Touchy Time!
  - Led, PWM Led
  - Led + PBs
  - Buzzer, Buzzer + PBs (Doorbell)
  - Ultrasonic Sensor (Bonus)

MAE Robotics Club

“

Experience is what you get when you didn't get what you wanted.

–Randy Pausch

MAE Robotics Club

# 1.

# Digital Information

The building blocks and logic of computers

# Digital Logic

MAE Robotics Club

| | | |
|---|---|---|
| Bit - | Binary Digit | 1 or 0 |
| Nibble - | (4-bits) 0000 | |
| Byte - | (8-bits) 0000 0000 | |

## Numbering System

| | | |
|---|---|---|
| Decimal | 0-9 | (e.g. 13, 77) |
| Binary | 0 or 1 | (e.g. 0101 1010) |
| Hexadecimal | 0-9, A-F | |
| Octal | 0-7 | |

# Data Types

MAE Robotics Club

Int, Float, Char

A data type or simply type is a classification of data which tells the compiler or interpreter how the programmer intends to use the data.

This data type defines the operations that can be done on the data, the meaning of the data, and the way values of that type can be stored.

# Hello, World

MAE Robotics Club

| | | Binary | | Hexadecimal | | Decimal |
|---|---|---|---|---|---|---|
| H | = | 01001000 | = | 48 | = | 72 |
| e | = | 01100101 | = | 65 | = | 101 |
| l | = | 01101100 | = | 6C | = | 108 |
| l | = | 01101100 | = | 6C | = | 108 |
| o | = | 01101111 | = | 6F | = | 111 |
| , | = | 00101100 | = | 2C | = | 44 |
| | = | 00100000 | = | 20 | = | 32 |
| w | = | 01110111 | = | 77 | = | 119 |
| o | = | 01100111 | = | 67 | = | 103 |
| r | = | 01110010 | = | 72 | = | 114 |
| l | = | 01101100 | = | 6C | = | 108 |
| d | = | 01100100 | = | 64 | = | 100 |

| Dec | Hex | Oct | Chr | Dec | Hex | Oct | HTML | Chr | Dec | Hex | Oct | HTML | Chr | Dec | Hex | Oct | HTML | Chr |
|---|---|---|---|---|---|---|---|---|---|---|---|---|---|---|---|---|---|---|
| 0 | 0 | 000 | NULL | 32 | 20 | 040 |   | Space | 64 | 40 | 100 | @ | @ | 96 | 60 | 140 | ` | ` |
| 1 | 1 | 001 | Start of Header | 33 | 21 | 041 | ! | ! | 65 | 41 | 101 | A | A | 97 | 61 | 141 | a | a |
| 2 | 2 | 002 | Start of Text | 34 | 22 | 042 | " | " | 66 | 42 | 102 | B | B | 98 | 62 | 142 | b | b |
| 3 | 3 | 003 | End of Text | 35 | 23 | 043 | # | # | 67 | 43 | 103 | C | C | 99 | 63 | 143 | c | c |
| 4 | 4 | 004 | End of Transmission | 36 | 24 | 044 | $ | $ | 68 | 44 | 104 | D | D | 100 | 64 | 144 | d | d |
| 5 | 5 | 005 | Enquiry | 37 | 25 | 045 | % | % | 69 | 45 | 105 | E | E | 101 | 65 | 145 | e | e |
| 6 | 6 | 006 | Acknowledgment | 38 | 26 | 046 | & | & | 70 | 46 | 106 | F | F | 102 | 66 | 146 | f | f |
| 7 | 7 | 007 | Bell | 39 | 27 | 047 | ' | ' | 71 | 47 | 107 | G | G | 103 | 67 | 147 | g | g |
| 8 | 8 | 010 | Backspace | 40 | 28 | 050 | ( | ( | 72 | 48 | 110 | H | H | 104 | 68 | 150 | h | h |
| 9 | 9 | 011 | Horizontal Tab | 41 | 29 | 051 | ) | ) | 73 | 49 | 111 | I | I | 105 | 69 | 151 | i | i |
| 10 | A | 012 | Line feed | 42 | 2A | 052 | * | * | 74 | 4A | 112 | J | J | 106 | 6A | 152 | j | j |
| 11 | B | 013 | Vertical Tab | 43 | 2B | 053 | + | + | 75 | 4B | 113 | K | K | 107 | 6B | 153 | k | k |
| 12 | C | 014 | Form feed | 44 | 2C | 054 | , | , | 76 | 4C | 114 | L | L | 108 | 6C | 154 | l | l |
| 13 | D | 015 | Carriage return | 45 | 2D | 055 | - | - | 77 | 4D | 115 | M | M | 109 | 6D | 155 | m | m |
| 14 | E | 016 | Shift Out | 46 | 2E | 056 | . | . | 78 | 4E | 116 | N | N | 110 | 6E | 156 | n | n |
| 15 | F | 017 | Shift In | 47 | 2F | 057 | / | / | 79 | 4F | 117 | O | O | 111 | 6F | 157 | o | o |
| 16 | 10 | 020 | Data Link Escape | 48 | 30 | 060 | 0 | 0 | 80 | 50 | 120 | P | P | 112 | 70 | 160 | p | p |
| 17 | 11 | 021 | Device Control 1 | 49 | 31 | 061 | 1 | 1 | 81 | 51 | 121 | Q | Q | 113 | 71 | 161 | q | q |
| 18 | 12 | 022 | Device Control 2 | 50 | 32 | 062 | 2 | 2 | 82 | 52 | 122 | R | R | 114 | 72 | 162 | r | r |
| 19 | 13 | 023 | Device Control 3 | 51 | 33 | 063 | 3 | 3 | 83 | 53 | 123 | S | S | 115 | 73 | 163 | s | s |
| 20 | 14 | 024 | Device Control 4 | 52 | 34 | 064 | 4 | 4 | 84 | 54 | 124 | T | T | 116 | 74 | 164 | t | t |
| 21 | 15 | 025 | Negative Ack. | 53 | 35 | 065 | 5 | 5 | 85 | 55 | 125 | U | U | 117 | 75 | 165 | u | u |
| 22 | 16 | 026 | Synchronous idle | 54 | 36 | 066 | 6 | 6 | 86 | 56 | 126 | V | V | 118 | 76 | 166 | v | v |
| 23 | 17 | 027 | End of Trans. Block | 55 | 37 | 067 | 7 | 7 | 87 | 57 | 127 | W | W | 119 | 77 | 167 | w | w |
| 24 | 18 | 030 | Cancel | 56 | 38 | 070 | 8 | 8 | 88 | 58 | 130 | X | X | 120 | 78 | 170 | x | x |
| 25 | 19 | 031 | End of Medium | 57 | 39 | 071 | 9 | 9 | 89 | 59 | 131 | Y | Y | 121 | 79 | 171 | y | y |
| 26 | 1A | 032 | Substitute | 58 | 3A | 072 | : | : | 90 | 5A | 132 | Z | Z | 122 | 7A | 172 | z | z |
| 27 | 1B | 033 | Escape | 59 | 3B | 073 | ; | ; | 91 | 5B | 133 | [ | [ | 123 | 7B | 173 | { | { |
| 28 | 1C | 034 | File Separator | 60 | 3C | 074 | < | < | 92 | 5C | 134 | \ | \ | 124 | 7C | 174 | | | \| |
| 29 | 1D | 035 | Group Separator | 61 | 3D | 075 | = | = | 93 | 5D | 135 | ] | ] | 125 | 7D | 175 | } | } |
| 30 | 1E | 036 | Record Separator | 62 | 3E | 076 | > | > | 94 | 5E | 136 | ^ | ^ | 126 | 7E | 176 | ~ | ~ |
| 31 | 1F | 037 | Unit Separator | 63 | 3F | 077 | ? | ? | 95 | 5F | 137 | _ | _ | 127 | 7F | 177 | &#127; | Del |

asciicharstable.com

MAE Robotics Club

# Ascii Table Examples

MAE Robotics Club

ASCII (ask-ee)

American Standard Code for Information Interchange

Usefulness

Instead of ->

```
printf("%c %c %c %c %c", 'A', 'B', 'C', 'D', 'E');
```

Now ->

```
for (i = 65; i<=69; i++)
{
    printf("Letter: %c", i);
}
```

MAE Robotics Club

# 2.

# Electronics

Current, Voltage

# Electronics

MAE Robotics Club

## Voltage & Current

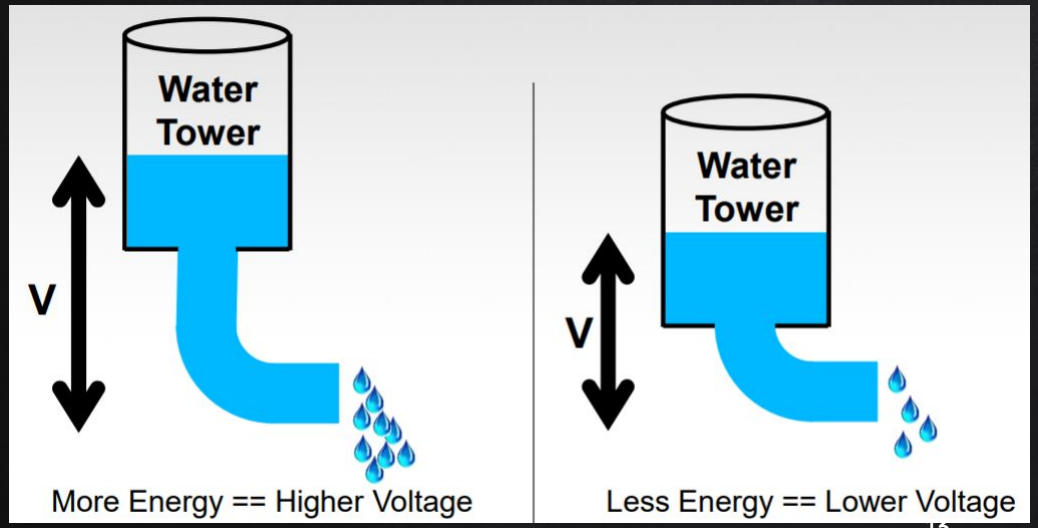


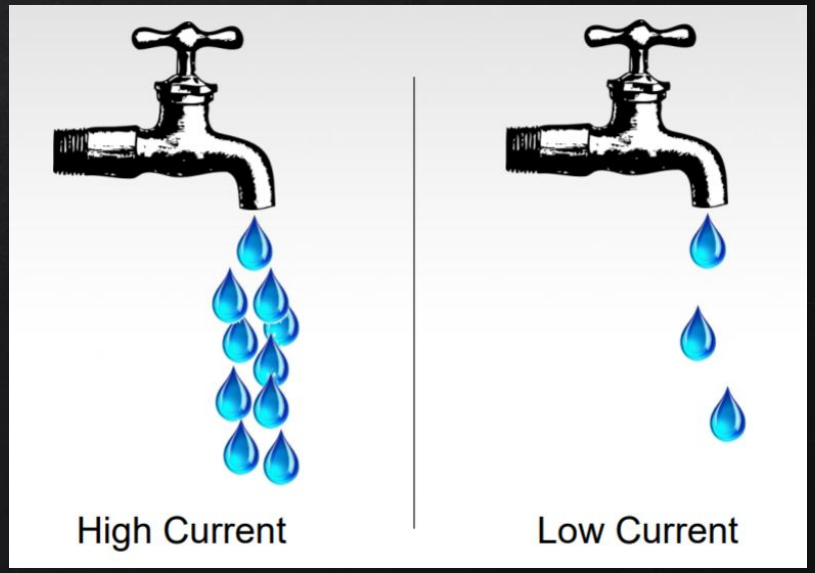

# Relationship

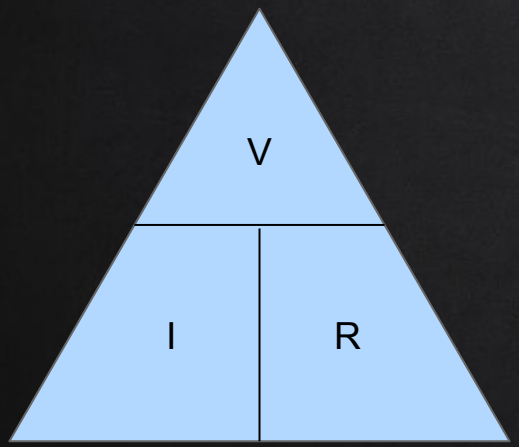


Volt - 5V

Current - 18 mA (to light up LED)

R = V/I

= 279 ohms ~ 220 ohm

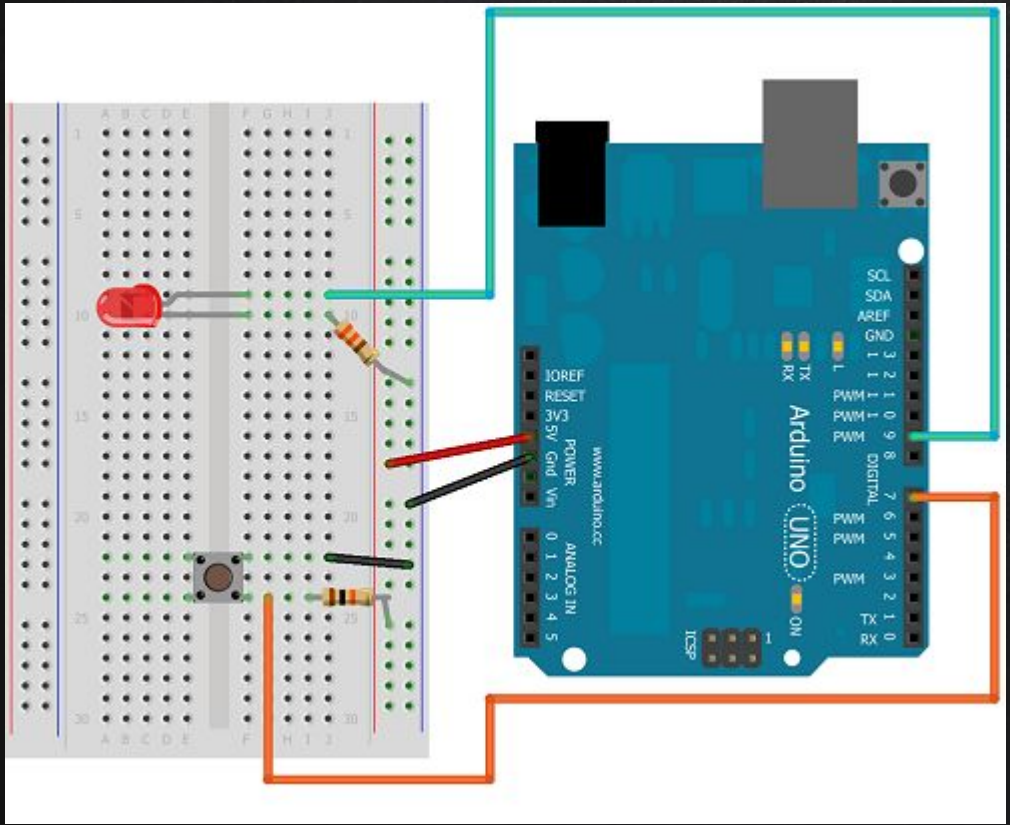
SCL
SDA
AREF
GND
13 12 11 10 9 8
L
TX
RX
PWM
PWM
PWM
DIGITAL
7 6 5 4 3 2 1 0
PWM
PWM
PWM
TX
RX
Arduino
UNO
ON
ICSP
1
IOREF
RESET
3V3
5V
Gnd
Gnd
Vin
POWER
www.arduino.cc
0 1 2 3 4 5
ANALOG IN

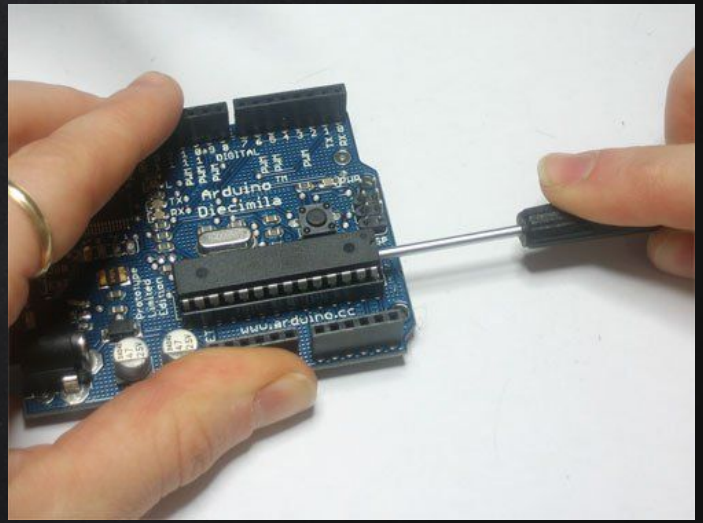
Arduino
Diecimila
DIGITAL
www.arduino.cc

# Microcontrollers

Brain of hardware
Have multiple lines, or connections

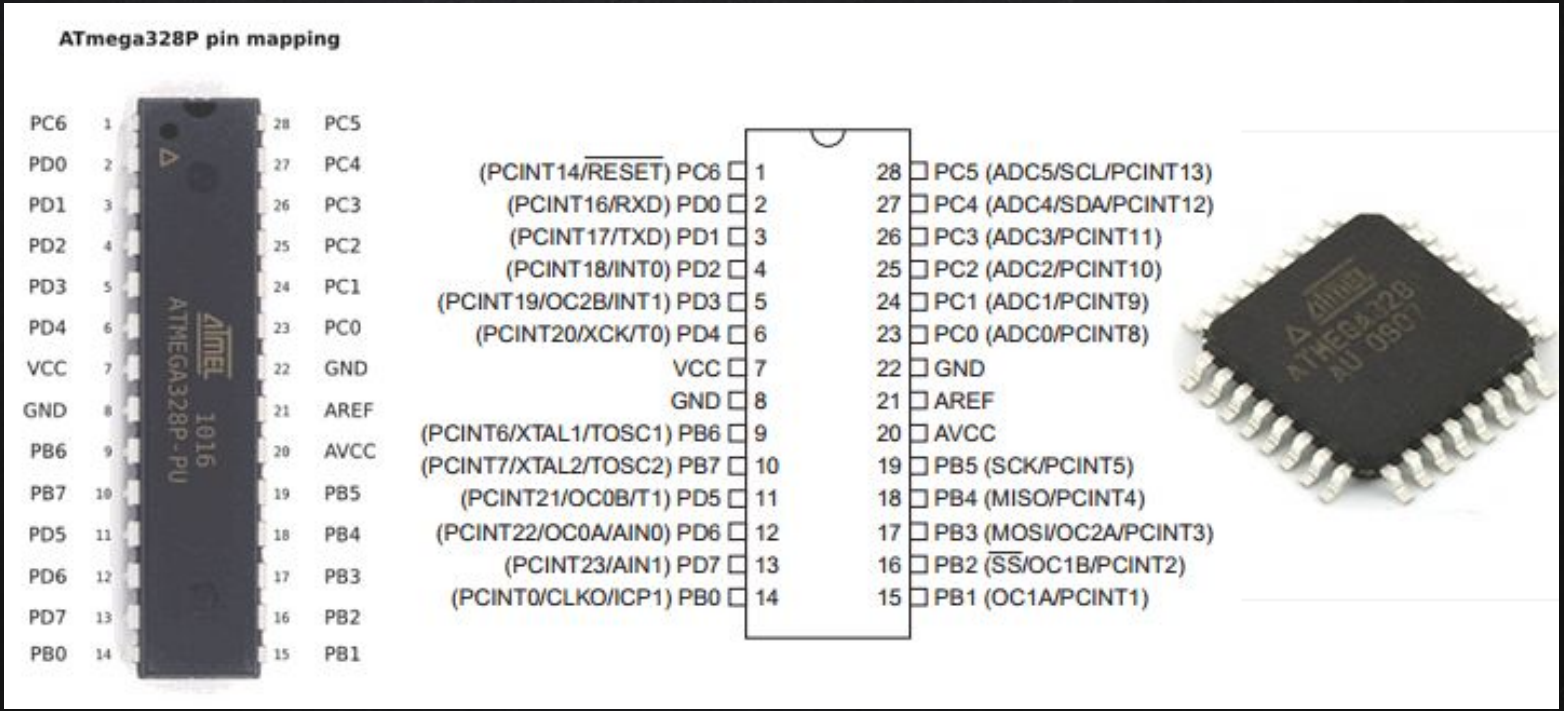

MAE Robotics Club

# 3.

# Arduino?

Ar-du-ween-Oh?

# Arduino Vs Raspberry Pi

MAE Robotics Club

| Specs | Arduino Uno | Raspberry Pi Model B+ |
|---|---|---|
| CPU type | Microcontroller | Microprocessor |
| Operating System | None | Linux (usually Raspbian) |
| Speed | 16 Mhz | 700 Mhz |
| RAM | 2KB | 512MB |
| GPU/Display | None | VideoCore IV GPU |
| Disk | 32KB | Depends on SD card |
| GPIO pins | 14 digital pins (includes 6 analog) | 26 digital pins |
| Other connectivity | None | USB, Ethernet, HDMI, audio |
| Power consumption | 0.25W | 3.5W |

# Arduino Family

MAE Robotics Club


Uno


Mega

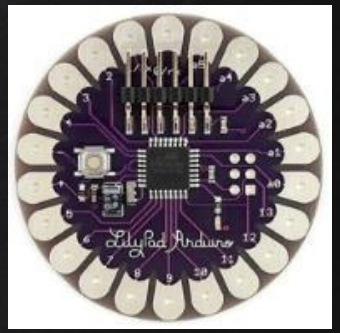

LilyPad

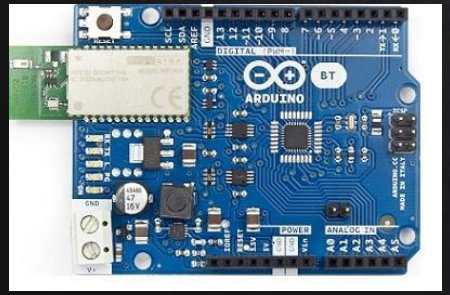


BT

Nano

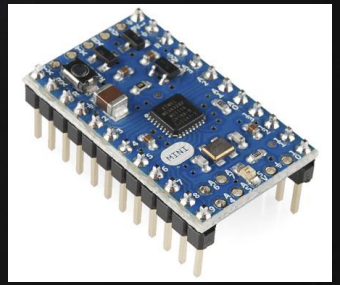

Mini

# Arduino UNO

MAE Robotics Club

Digital output
~: PWM.
0,1: Serial port

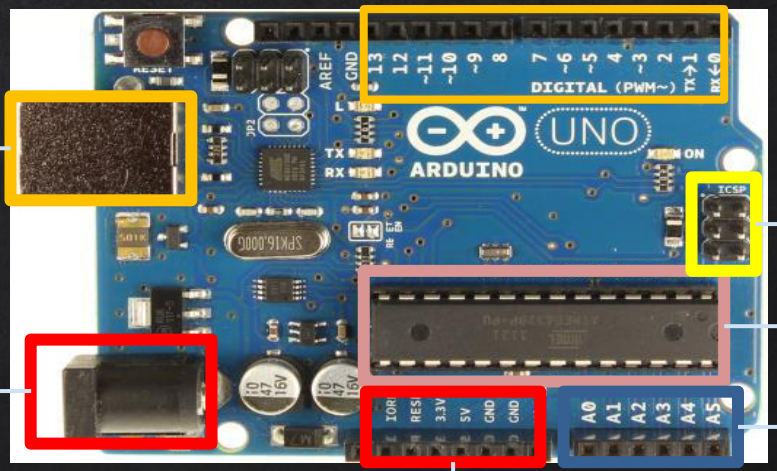


USB port

In circuit Serial programming

Atmel MicroController

Power input

Power Supply

Analog input

MAE Robotics Club

# 4.

# IDE

Integrated development environment

# Arduino IDE

## Source Code Editor, Build Automation Tools, Debugger

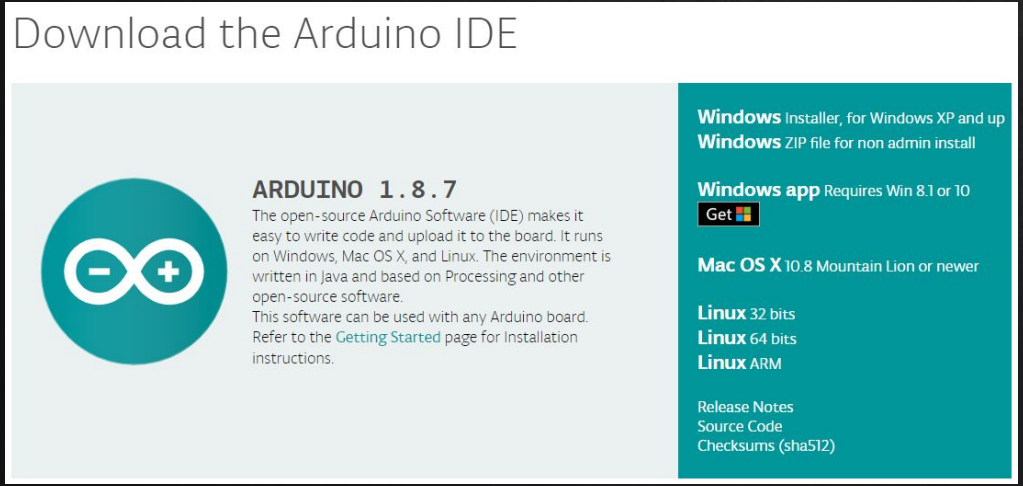


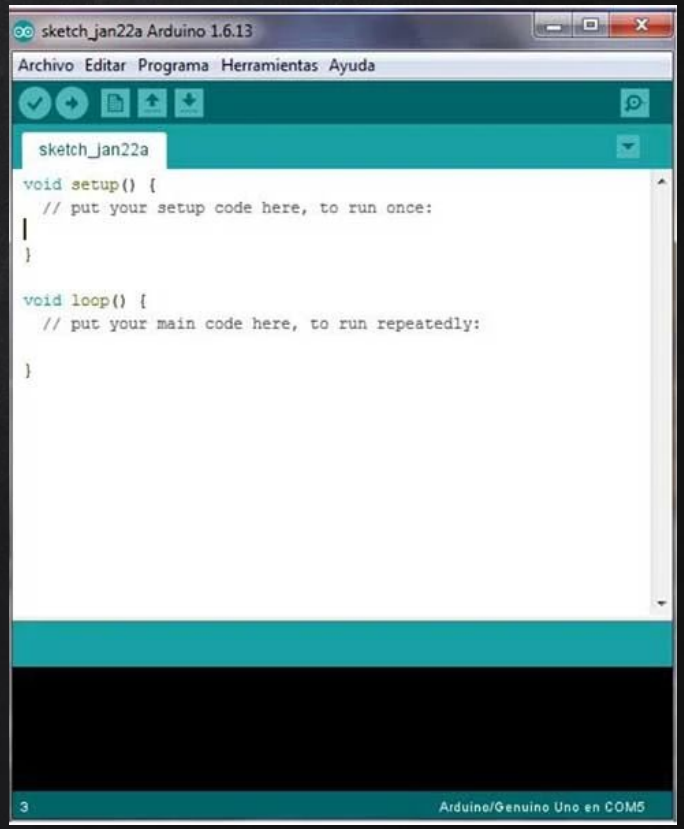

# Setup

-Select board (Arduino Uno)

-Select port (it changes if you change to a different USB port)

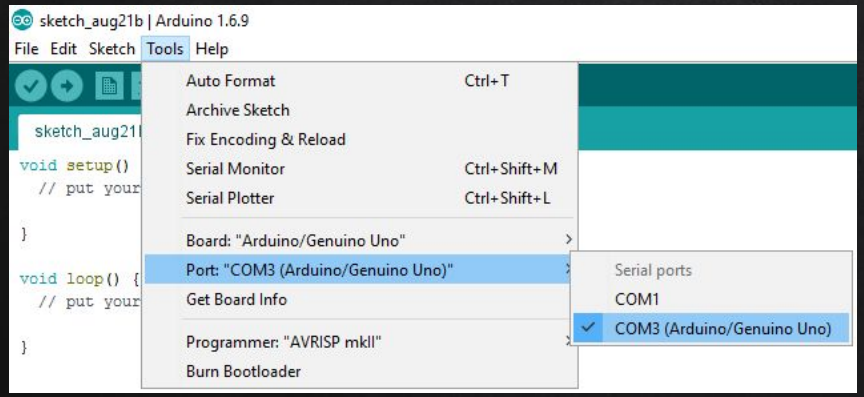


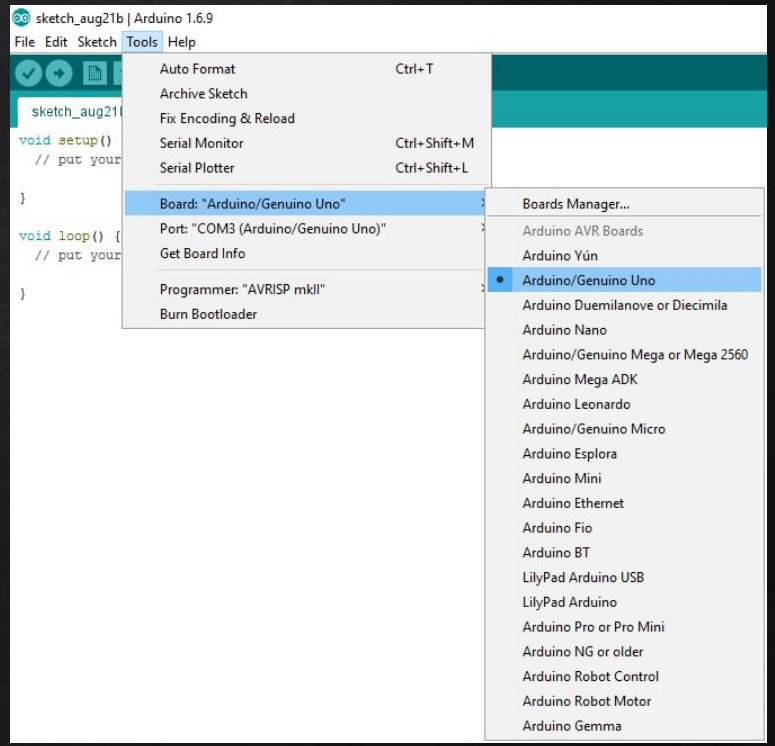

# Examples

-See sample programs

-Test if arduino is connected successfully

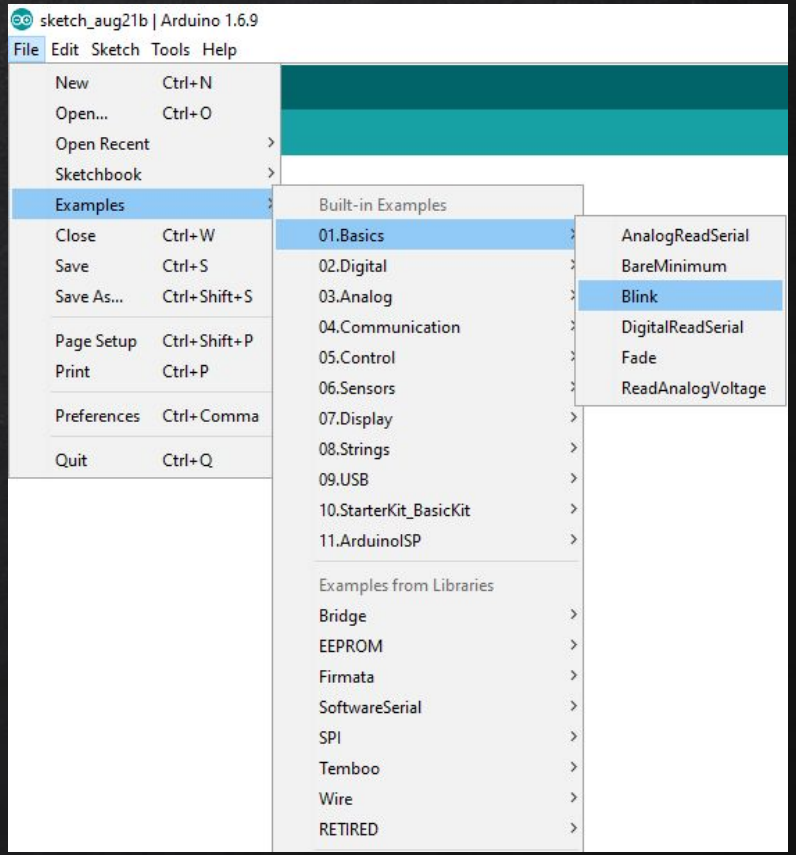


MAE Robotics Club

# Standard Functions

MAE Robotics Club

- setup( ): A function present in every Arduino sketch. Run once before the loop( ) function. Often used to set pinmode to input or output -> variable declaration

The setup( ) function looks like:

```
void setup( )      {
//code goes here
 }
```

- loop( ): A function present in every single Arduino sketch. The loop( ) is where (almost) everything happens. The one exception to this is setup( ) and variable declaration.

The loop( ) function looks like:

```
void loop( )       {
 //code goes here
 }
```

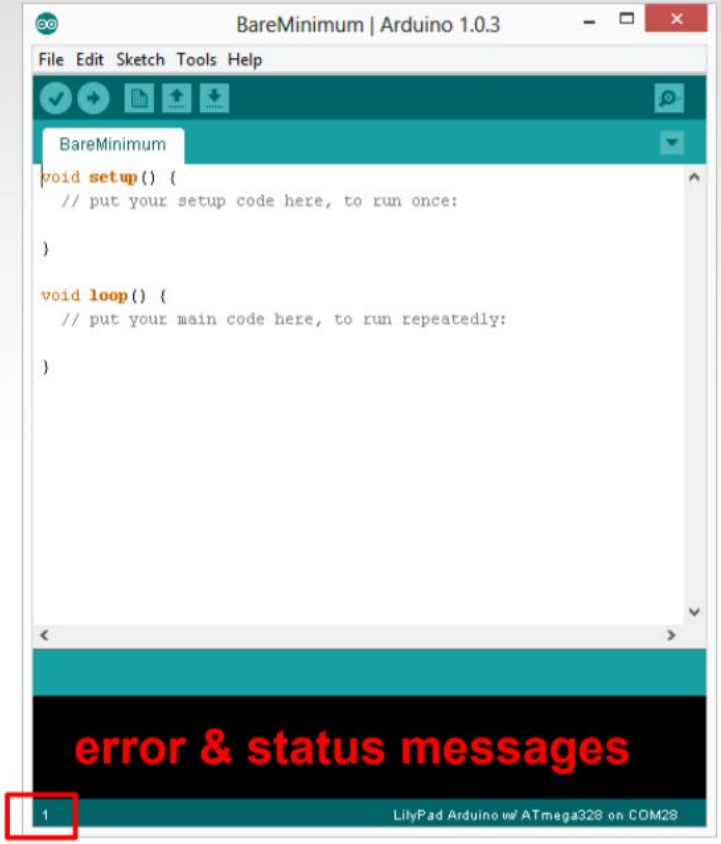


Two required functions / methods / routines:

```
void setup()
{
        // runs once
}

void loop()
{
        // repeats
}
```

MAE Robotics Club

# Some Terminology

MAE Robotics Club

| | | |
|---|---|---|
| input: | A pin mode that **intakes** information | |
| output: | A pin mode that **sends** information | |
| HIGH: | Electrical signal present (5V for Uno). | -> ON /True |
| LOW: | No electrical signal present (0V). | -> OFF or False |

# Basic Syntax

MAE Robotics Club

; Semicolon
Used to end a statement.

{ } Curly Braces / ( ) Parentheses / [ ] Brackets

// or /**/ Comments

# Standard Functions

MAE Robotics Club

- PinMode(pin_number, INPUT/OUTPUT)

This function declares a given pin to be input or output pin.

- digitalWrite(pin_number,0/1/HIGH/LOW):

This function produces a digital signal of either HIGH(5V) or LOW(0V) on the given pin.

- analogWrite(pin_number, value)

This function produces an analog signal varying between 0 to 5V on the given pin.

- analogRead(pin_number)

This function reads the voltage on the given pin and outputs its value as an integer ranging from 0 to 1023.

- digitalRead(pin_number)

This function reads the voltage on the given pin and outputs its value as either 0 or 1.

# Standard Functions

MAE Robotics Club

- Serial.begin(baud_rate)

This function begins serial communication between the microcontroller and the arduino.

- Serial.print()

This function prints the value in its argument on the serial monitor of the arduino IDE.

- delay(time)

This function provides delay of given time (in milliseconds) during execution of the code.

- void setup() : The code inside this function is run only once, when new code has been uploaded.

- void loop() : The code inside this runs on a loop. Without any delay function, the default rate of delay is 1ms.

MAE Robotics Club

# 5.

# Let's Get Physical

Components/Sensors

| Name | Image | Type | Function | Notes |
|---|---|---|---|---|
| Push Button |  | Digital Input | Switch - Closes or opens circuit | Polarized, needs resistor |
| Trim potentiometer |  | Analog Input | Variable resistor | Also called a Trimpot. |
| Photoresistor |  | Analog Input | Light Dependent Resistor (LDR) | Resistance varies with light. |
| Relay |  | Digital Output | Switch driven by a small signal | Used to control larger voltages |
| Temp Sensor |  | Analog Input | Temp Dependent Resistor | |
| Flex Sensor |  | Analog Input | Variable resistor | |
| Soft Trimpot |  | Analog Input | Variable resistor | Careful of shorts |
| RGB LED |  | Dig & Analog Output | 16,777,216 different colors | Ooh... So pretty. |

MAE Robotics Club

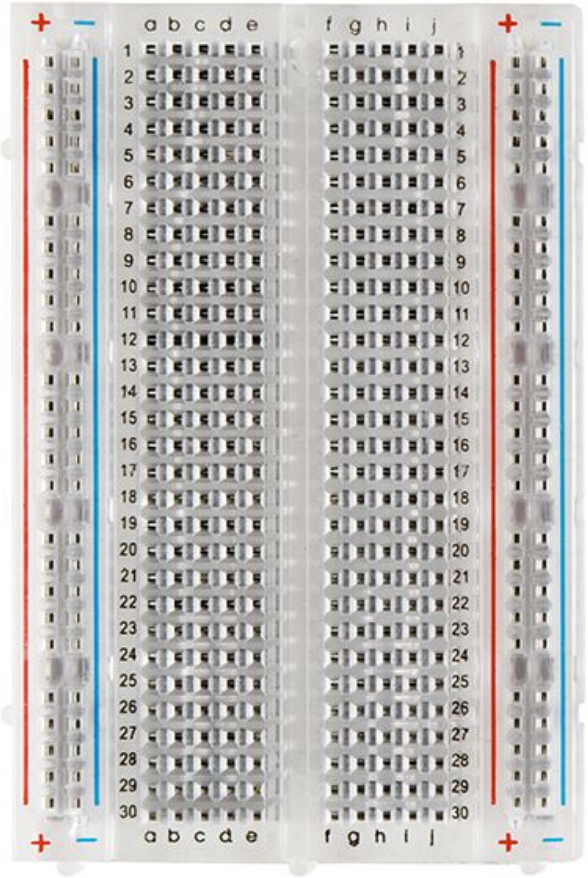


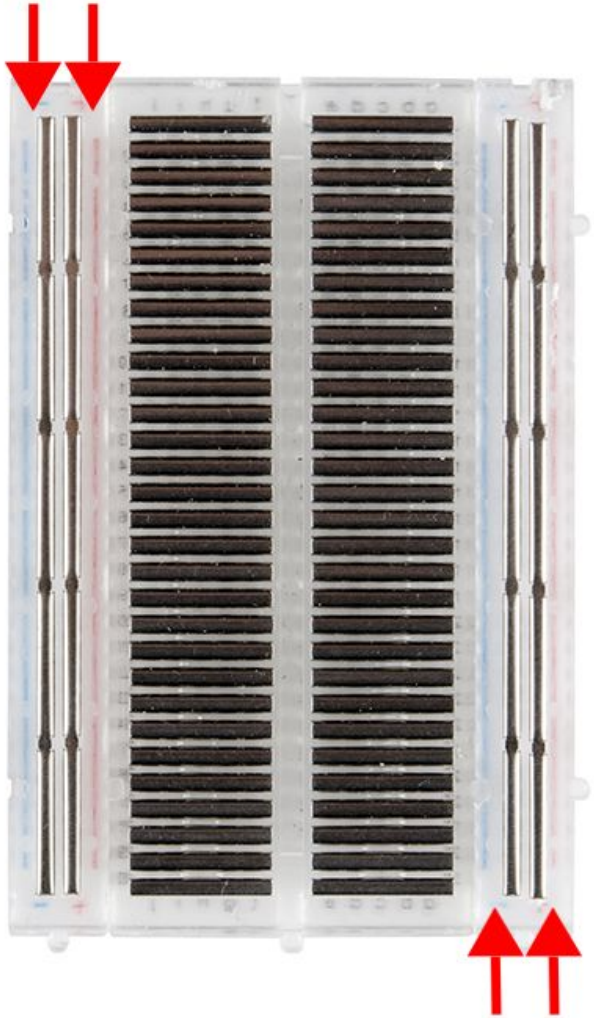

MAE Robotics Club

# Breadboard Understanding test

MAE Robotics Club

1. Is A5 connected to E5?
2. Is A5 connected to A7?
3. Is E5 connected to F5?
4. Is D10 connected to H50?

# Breadboard Understanding test

MAE Robotics Club

1. Is A5 connected to E5? YES
2. Is A5 connected to A7? NO
3. Is E5 connected to F5? NO
4. Is D10 connected to H50? NO

MAE Robotics Club

# How to read resistors

## 4-Band-Code

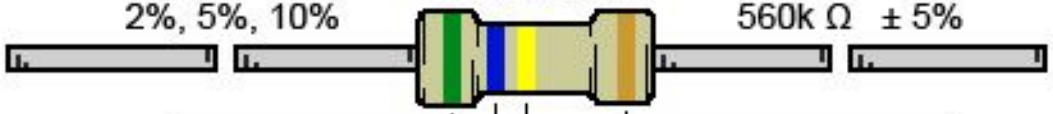


| COLOR | 1ST BAND | 2ND BAND | 3RD BAND | MULTIPLIER | TOLERANCE |
|---|---|---|---|---|---|
| Black | 0 | 0 | 0 | 1Ω | |
| Brown | 1 | 1 | 1 | 10Ω | ± 1% (F) |
| Red | 2 | 2 | 2 | 100Ω | ± 2% (G) |
| Orange | 3 | 3 | 3 | 1KΩ | |
| Yellow | 4 | 4 | 4 | 10KΩ | |
| Green | 5 | 5 | 5 | 100KΩ | ± 0.5% (D) |
| Blue | 6 | 6 | 6 | 1MΩ | ± 0.25% (C) |
| Violet | 7 | 7 | 7 | 10MΩ | ± 0.10% (B) |
| Grey | 8 | 8 | 8 | | ± 0.05% |
| White | 9 | 9 | 9 | | |
| Gold | | | | 0.1Ω | ± 5% (J) |
| Silver | | | | 0.01Ω | ± 10% (K) |

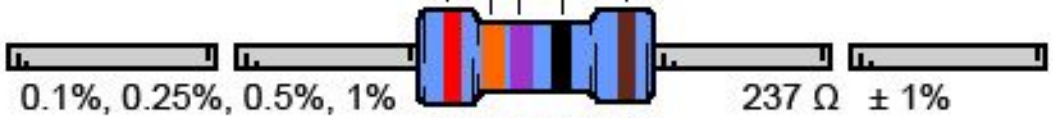


## 5-Band-Code

MAE Robotics Club

MAE Robotics Club

# Touchy Time

## Hardware

- ✘ Arduino Uno
- ✘ Breadboard
- ✘ Type A-B USB Cable
- ✘ 220 Ohm Resistor
- ✘ LED
- ✘ Push Button
- ✘ Buzzer
- ✘ Jumper Wires – 5

## Software

- ✘ Arduino IDE – https://www.arduino.cc/en/Main/Software
- ✘ Driver (May not need) – https://sparks.gogo.co.nz/ch340.html

# Rmb to Add resistor

MAE Robotics Club

Arduino current **< 50mA**
LED current **< 30mA**
Source voltage = 5V
LED voltage drop = 2V
Resistance = 220 Ohm
**V = iR**
Current = (5V-2V)/220 Ohm = **14mA**

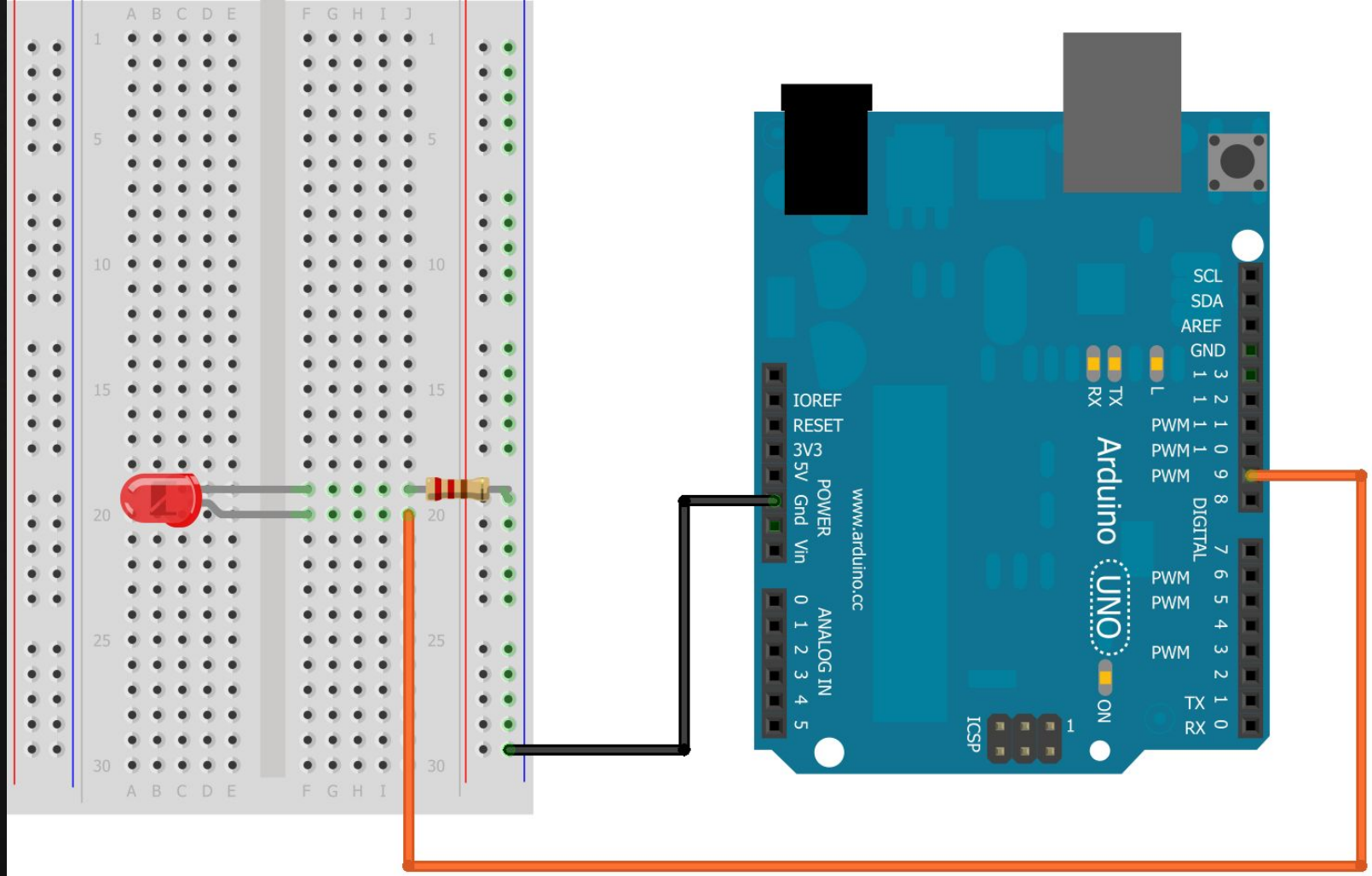

# Code

MAE Robotics Club

```
void setup() {
   pinMode(9, OUTPUT); }
```

Initialize ledPin (pin 9) as OUTPUT pin

```
void loop() {
   digitalWrite(9, HIGH);
   delay(1000);
   digitalWrite(9, LOW);
   delay(1000);
}
```

Turn LED on by setting voltage to high, sleep for 1s, then turn LED off by setting voltage to low

# PWM

You can also use pulse width modulation to control the angle of a servo motor

. Servos have a shaft that turns to specific position based on its control line. Our servo motors have a range of about 180 degrees.

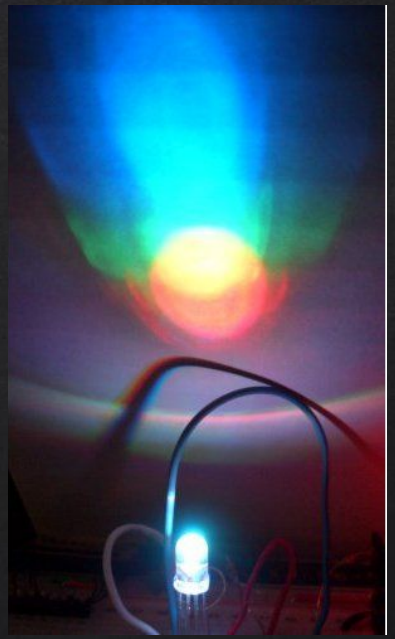

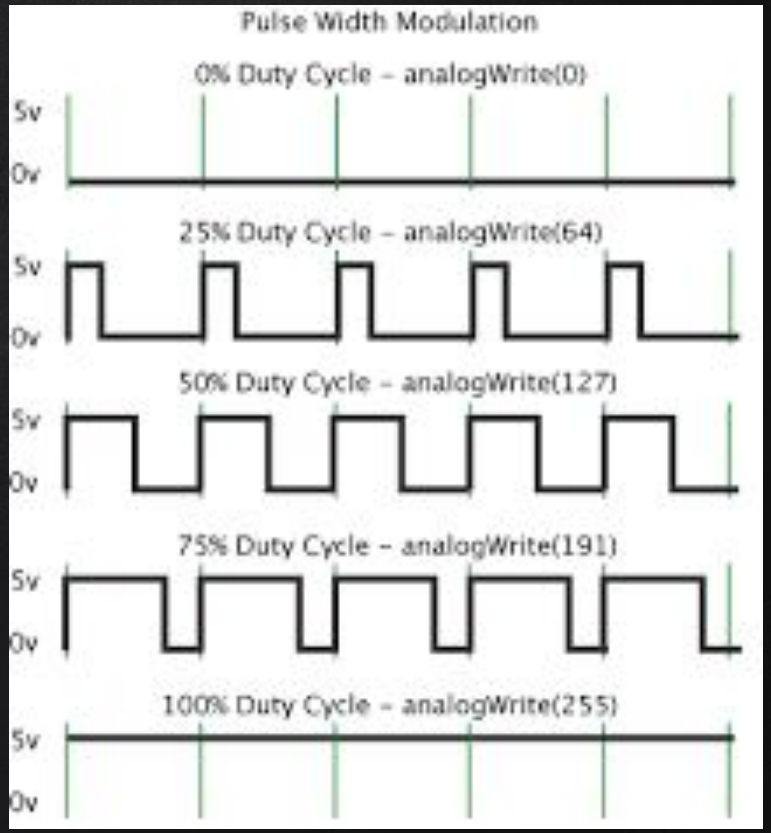

MAE Robotics Club

# PWM

Pulse Width Modulation, or PWM, is a technique for getting analog results with digital means.

Digital control is used to create a square wave, a signal switched between on and off. This on-off pattern can simulate voltages in between full on (5 Volts) and off (0 Volts) by changing the portion of the time the signal spends on versus the time that the signal spends off. The duration of "on time" is called the pulse width.

# Analog – PWM

MAE Robotics Club

- analogRead(pin_number)

This function reads the voltage on the given pin and outputs its value as an integer ranging from 0 to 1023.

- analogWrite(pin_number, value)

This function produces an analog signal varying between 0 to 5V on the given pin.

This allows you to get readings from analog sensors or interfaces that have more than two states.

This allows you to set output to a PWM value instead of just HIGH or LOW.

PWM: Stands for Pulse-Width Modulation, a method of emulating an analog signal through a digital pin. A value between or including 0 and 255. Used with analogWrite.

MAE Robotics Club

# Analog Range: 0 – 255

A bit is a binary digit. So a byte can hold 2 (binary) ^ 8 numbers ranging from 0 to 2^8–1 = 255.

A byte, by its standard definition, is 8 bits which can represent 256 values (0 through 255).

# Code

MAE Robotics Club

```
int x = 0;
void setup() {
   pinMode(9, OUTPUT); }

void loop() {
   analogWrite(9,x);
   if(x == 255){
       x = 0; }
   else{
      x++; }
   delay(10);
}
```

# Baud Rate

Serial_01 | Arduino 1.6.7

File Edit Sketch Tools Help

Serial_01

```
int i = 0;

void setup() {
  // put your setup code here, to run once:
  Serial.begin(9600);

}

void loop() {
   // put your main code here, to run repeatedly:
      if( i < 10) {
        Serial.println("Hello World !");
        delay(1000);
        i++;
      }
}
```

Done Saving.

```
Sketch uses 1,994 bytes (6%) of program storage space. Maximum is 32,
Global variables use 216 bytes (10%) of dynamic memory, leaving 1,832
```

5 Arduino/Genuino Uno on COM3

COM3 (Arduino/Genuino Uno)

Send

```
Hello World !
Hello World !
Hello World !
Hello World !
Hello World !
Hello World !
Hello World !
Hello World !
Hello World !
Hello World !
```

Autoscroll No line ending 9600 baud

MAE Robotics Club

# Push Button

MAE Robotics Club

However, one must be careful to remember the orientation of the legs within the push button.

Legs 1 and 2 are always connected!
Legs 3 and 4 are always connected!
The disconnection is between 12 and 34!

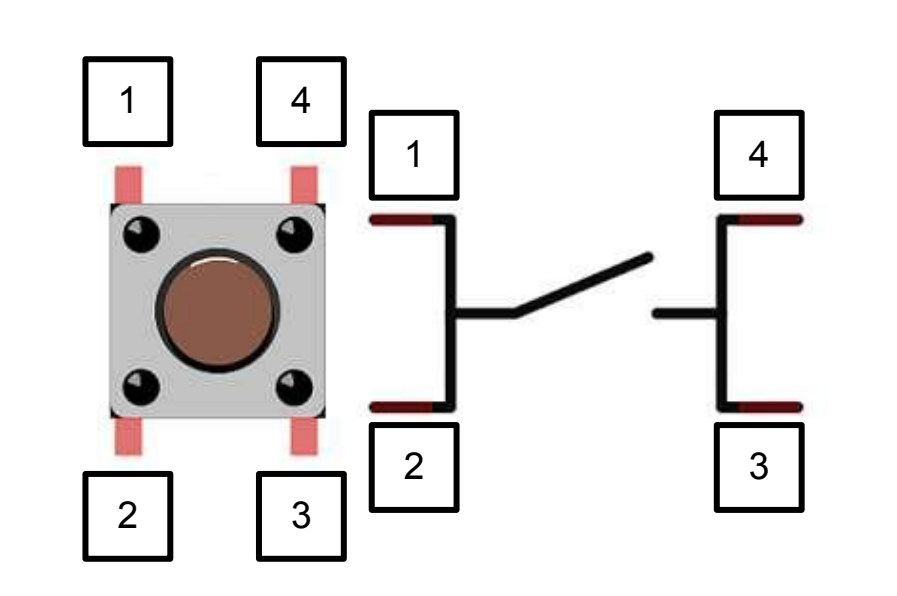

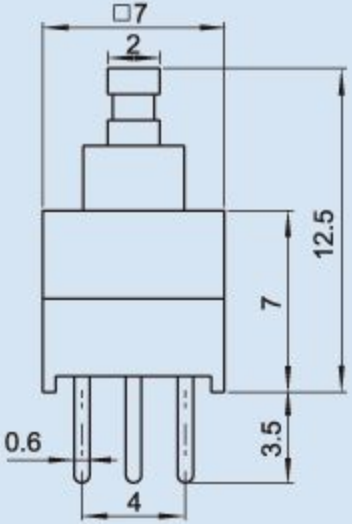


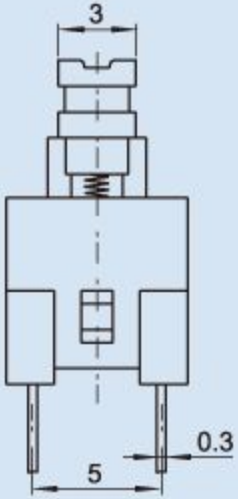


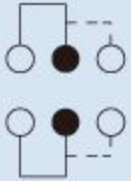

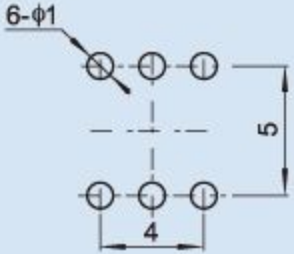


**KFC-7x7-B**

MAE Robotics Club

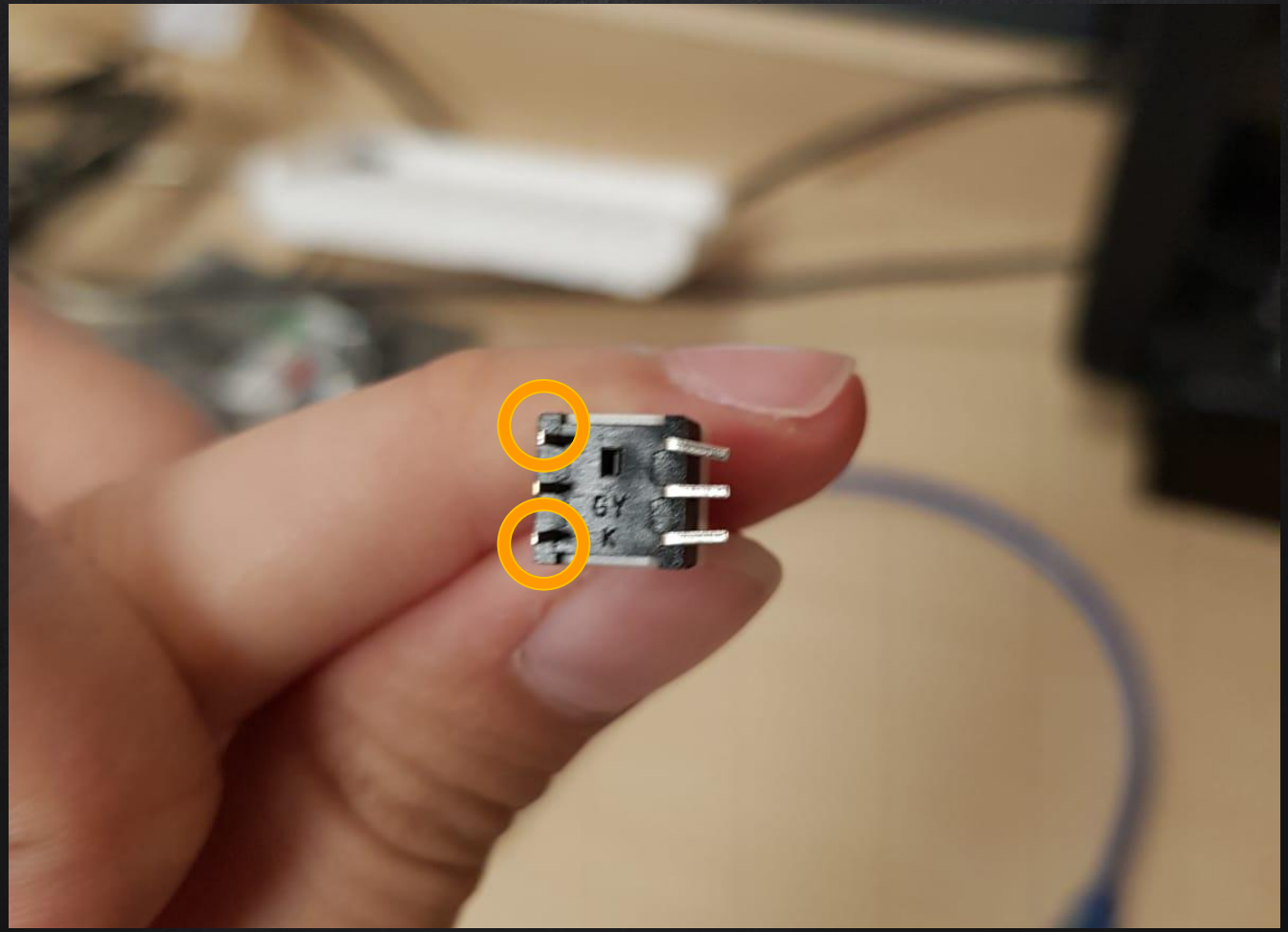
GY
K

# Boolean Operators

MAE Robotics Club

| <Boolean> | Description |
|---|---|
| ( ) == ( ) | is equal? |
| ( ) != ( ) | is not equal? |
| ( ) > ( ) | greater than |
| ( ) >= ( ) | greater than or equal |
| ( ) < ( ) | less than |
| ( ) <= ( ) | less than or equal |

# Buttons and Booleans

PB is pin 2

LED is pin 9

PB Set to high.

If PB Pressed, LED light up.

```
int signal1;

void setup() {
	pinMode(9, OUTPUT);
	pinMode(2, INPUT_PULLUP);
	Serial.begin(9600);
}

void loop() {
	signal1 = digitalRead(2);
	Serial.println(signal1);

	if (signal1 == 0){
		digitalWrite(9, HIGH);
		delay(10);
	}
	else{
		digitalWrite(9, LOW);
		delay(10);
	}
}
```

MAE Robotics Club

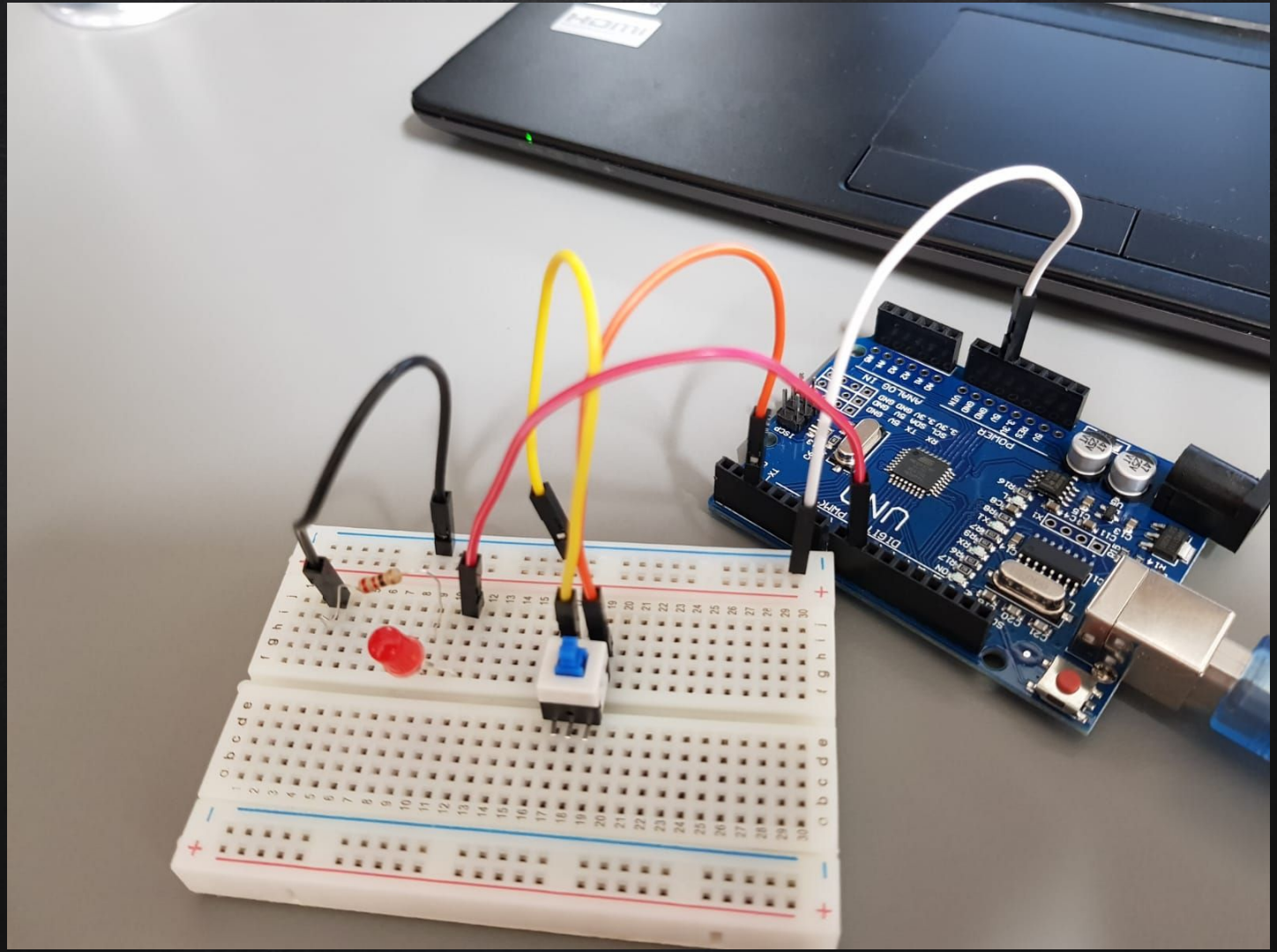

MAE Robotics Club

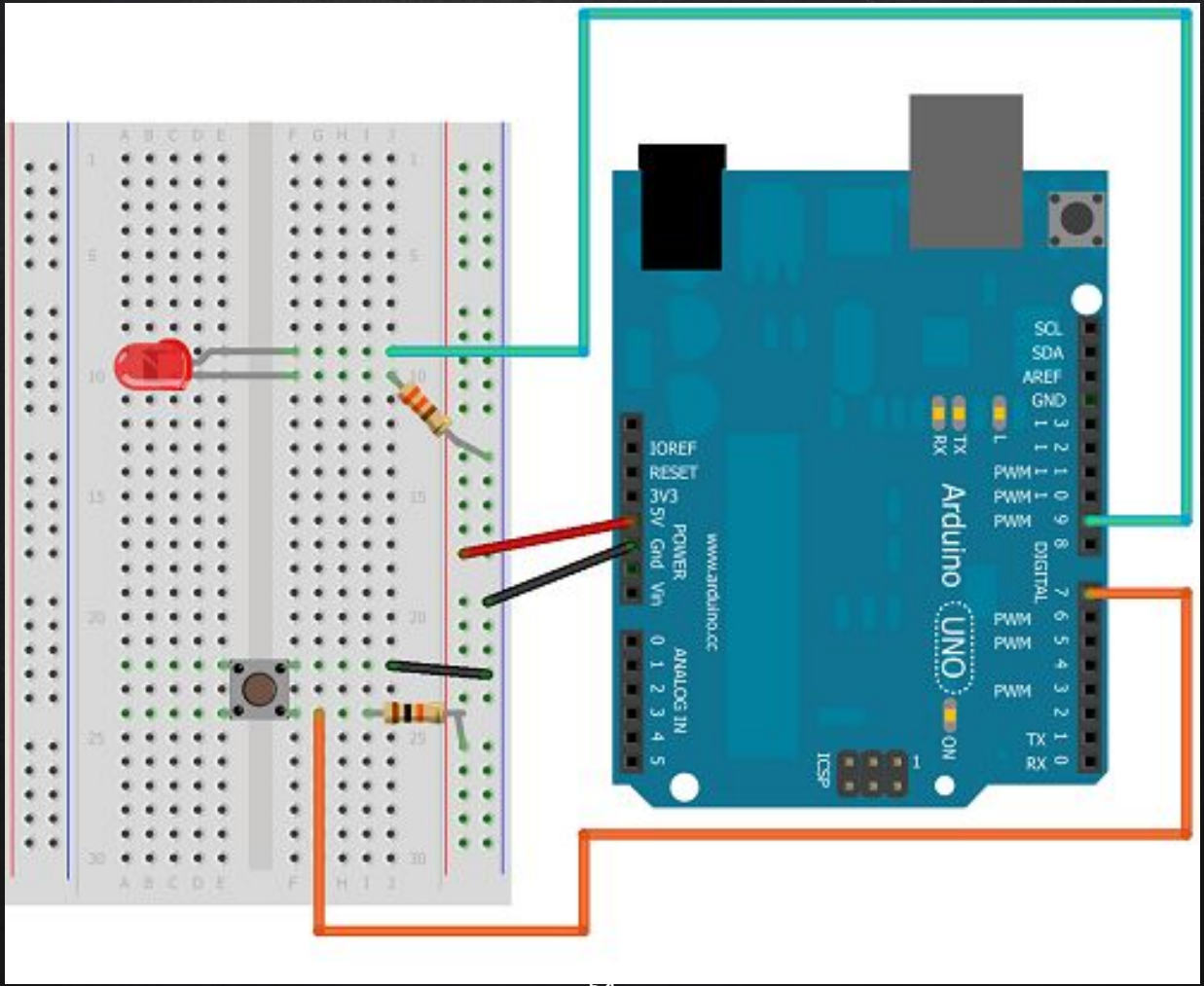
SCL
SDA
AREF
GND
13
12
11
10
9
8
PWM
PWM
PWM
DIGITAL
7
6
5
4
3
2
1
0
PWM
PWM
PWM
TX
RX
L
TX
RX
Arduino
UNO
ON
ICSP
1
IOREF
RESET
3V3
5V
Gnd
Gnd
Vin
POWER
www.arduino.cc
ANALOG IN
0
1
2
3
4
5

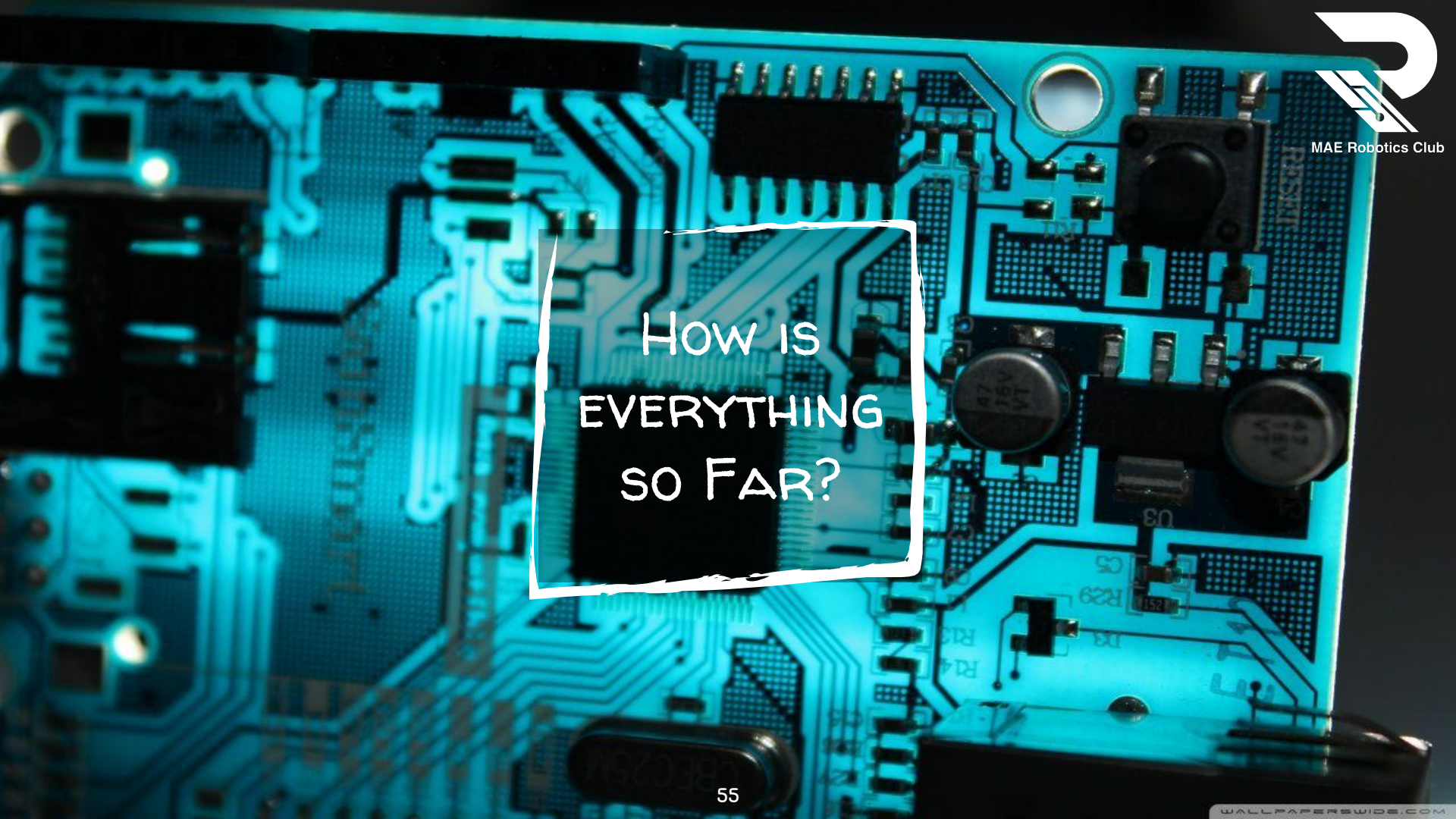

# How is everything so far?

MAE Robotics Club

# Piezo Buzzer

MAE Robotics Club

tone()
Generates a square wave of the specified frequency (and 50% duty cycle) on a pin. A duration can be specified, otherwise the wave continues until a call to noTone(). The pin can be connected to a piezo buzzer or other speaker to play tones.

Only one tone can be generated at a time. If a tone is already playing on a different pin, the call to tone() will have no effect. If the tone is playing on the same pin, the call will set its frequency.

# Tone

MAE Robotics Club

tone()

Syntax
tone(pin, frequency)
tone(pin, frequency, duration)

noTone()
Stops the generation of a square wave triggered by tone(). Has no effect if no tone is being generated.

NOTE: if you want to play different pitches on multiple pins, you need to call noTone() on one pin before calling tone() on the next pin.

Syntax noTone(pin)

# Buzzer time

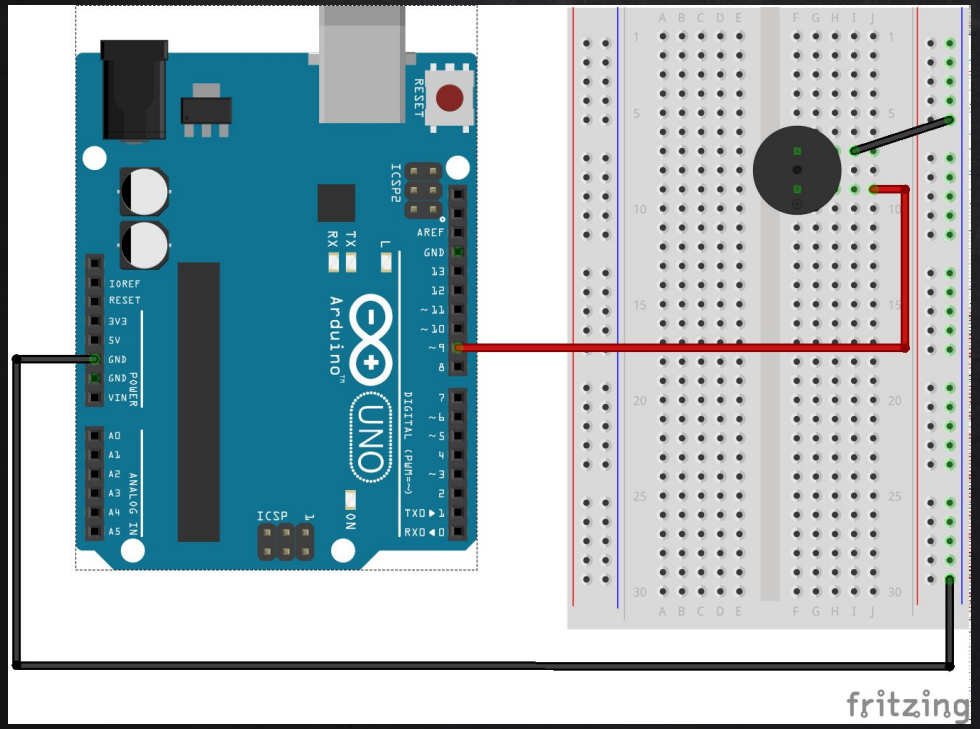


```
void setup() {
    pinMode(9, OUTPUT);
}

void loop() {
    tone(9, 262, 500);
    delay(1000);
    noTone(9);
    delay(500);
}
```

# Doorbell

```
int signal1;

void setup() {
pinMode(9, OUTPUT);
pinMode(2, INPUT_PULLUP);
}
```

```
void loop() {
    signal1 = digitalRead(2);
    if(signal1 == 0){
        tone(9, 262, 500);
        delay(600);
        tone(9, 440, 500);
        delay(600);
        tone(9, 262, 1000);
        delay(1200);
    }
    else{
        noTone(9);
    }
}
```

# Doorbell Demo

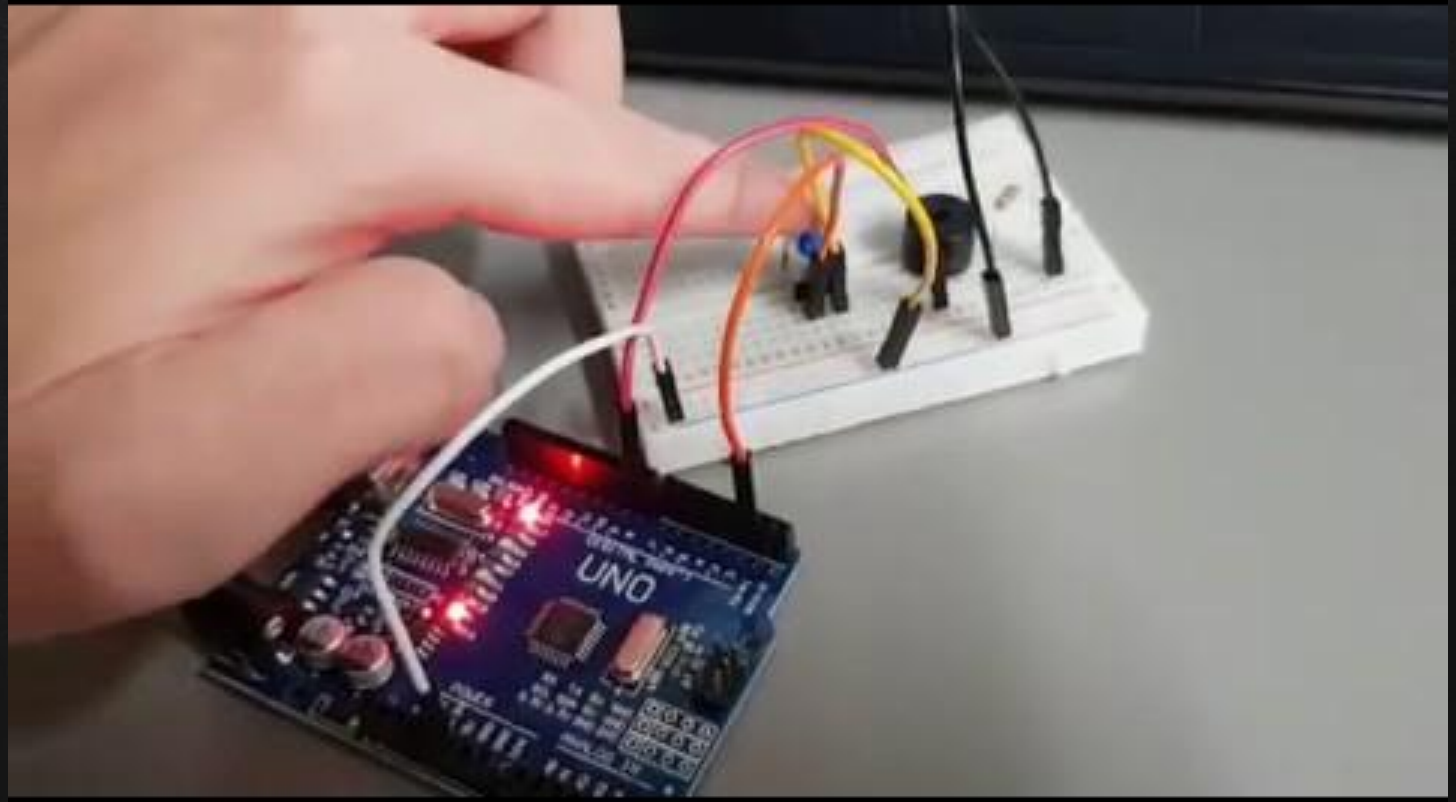


MAE Robotics Club

# THANKS!

MAE Robotics Club

Want the slides? Pls give me feedback:
https://tinyurl.com/MAERCarduino

https://www.facebook.com/ntu.mae.rc

https://www.instagram.com/mae.robotics/