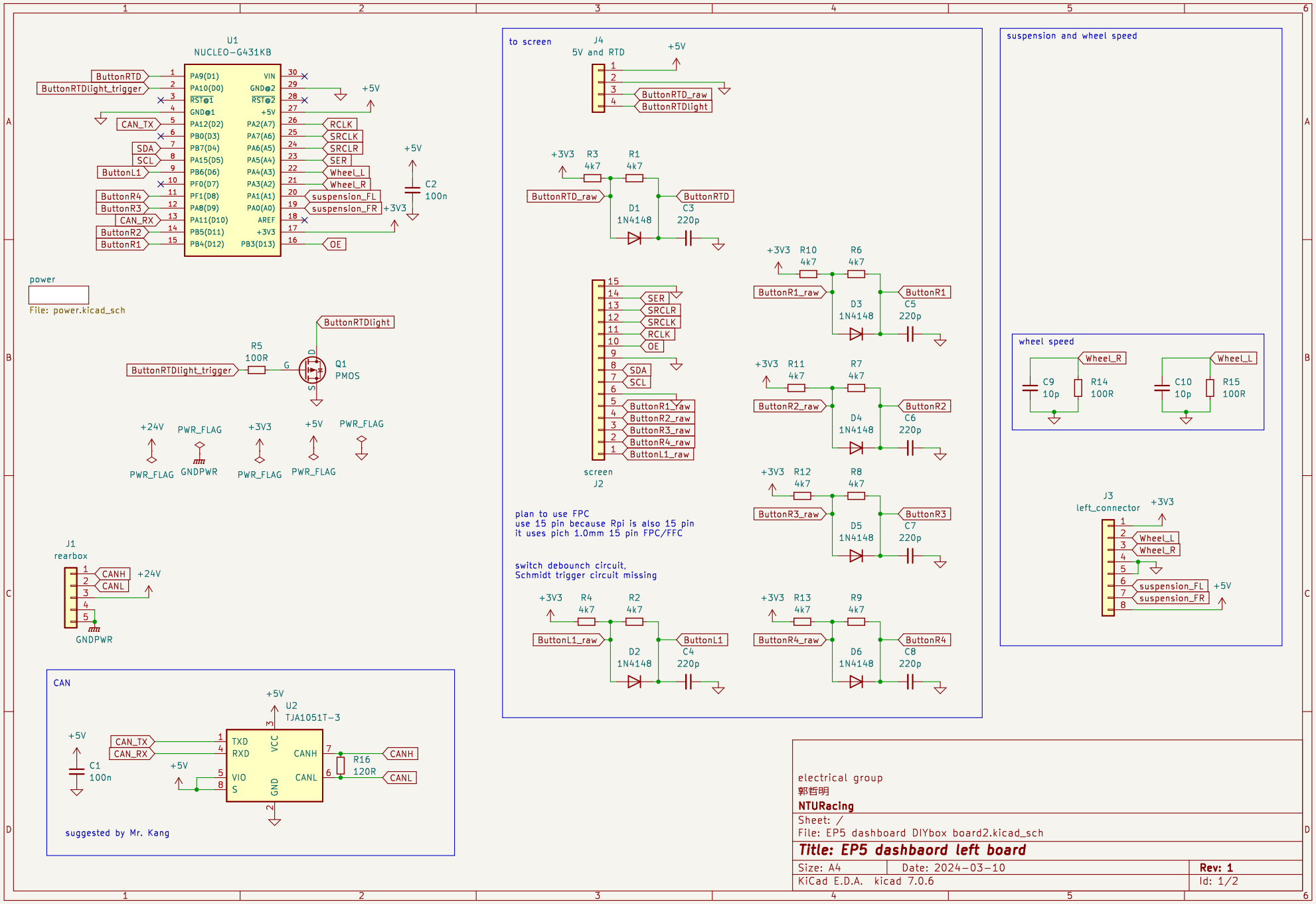

electrical group
郭哲明
NTURacing

Sheet: /
File: EP5 dashboard DIYbox board2.kicad_sch

Title: EP5 dashbaord left board

Size: A4	Date: 2024-03-10	**Rev: 1**
KiCad E.D.A. kicad 7.0.6		Id: 1/2

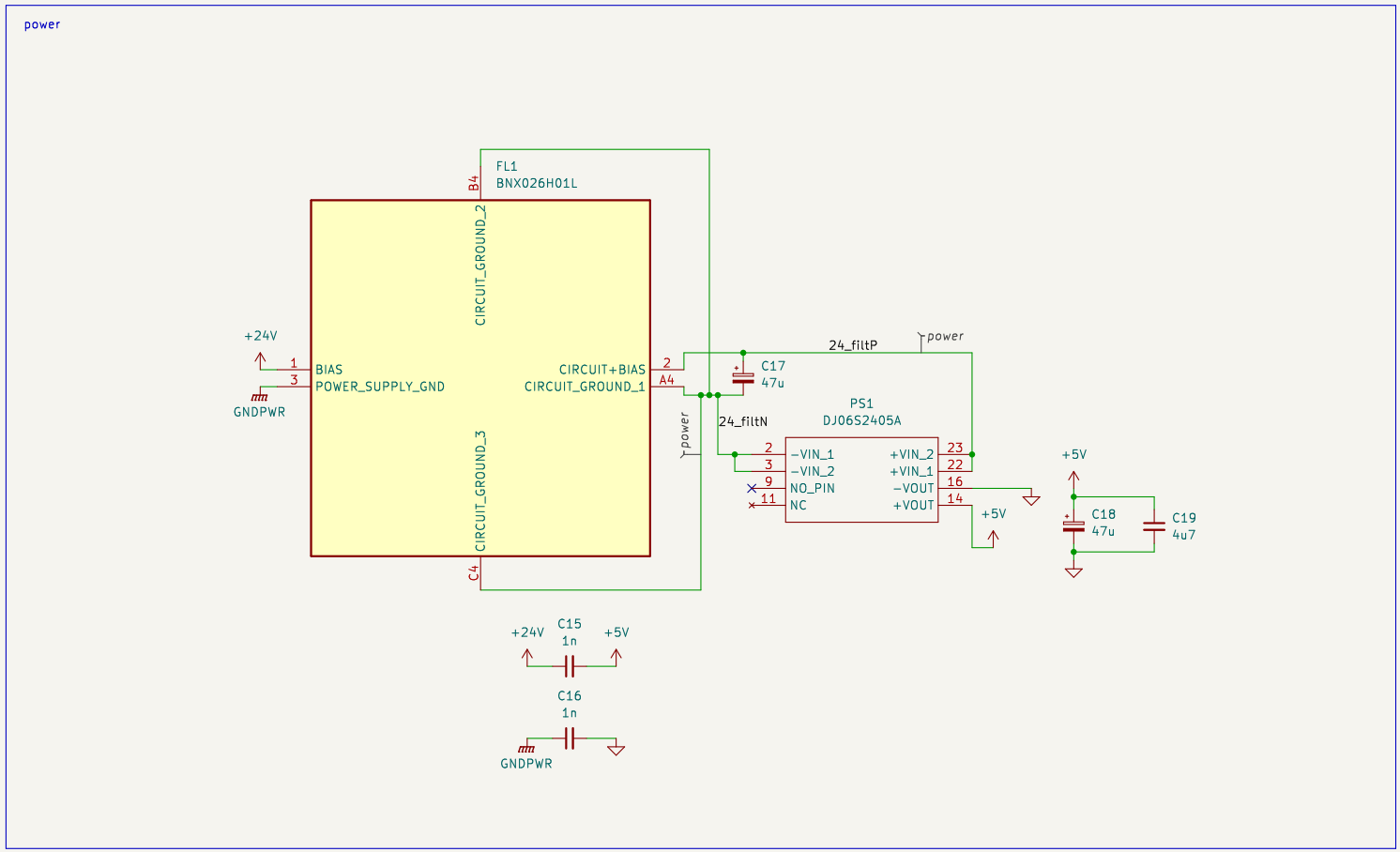

electrical group
郭哲明
NTURacing

Sheet: /power/
File: power.kicad_sch

Title: EP5 dashbaord left board

Size: A4	Date: 2024-03-10	**Rev: 1**
KiCad E.D.A. kicad 7.0.6		Id: 2/2