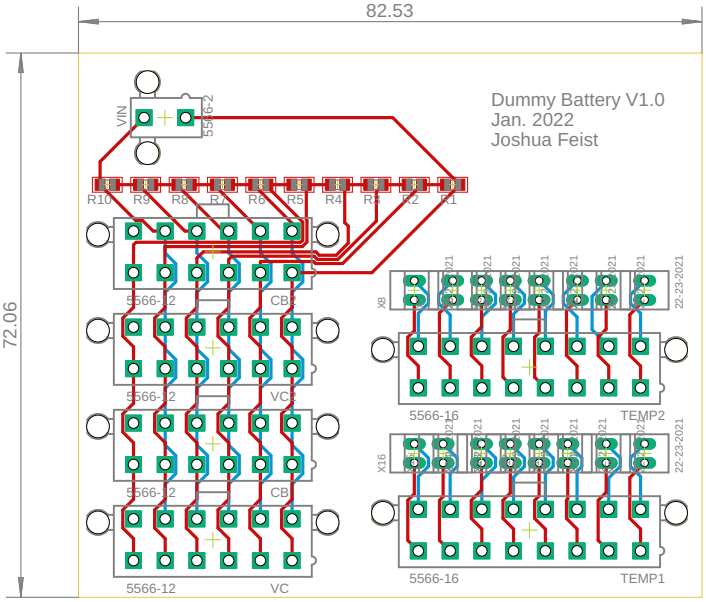
82.53
72.06
Dummy Battery V1.0
Jan. 2022
Joshua Feist
VIN
5566-2
R10
R9
R8
R7
R6
R5
R4
R3
R2
R1
5566-12
CB
VC
X8
X16
5566-16
TEMP2
TEMP1
22-23-2021