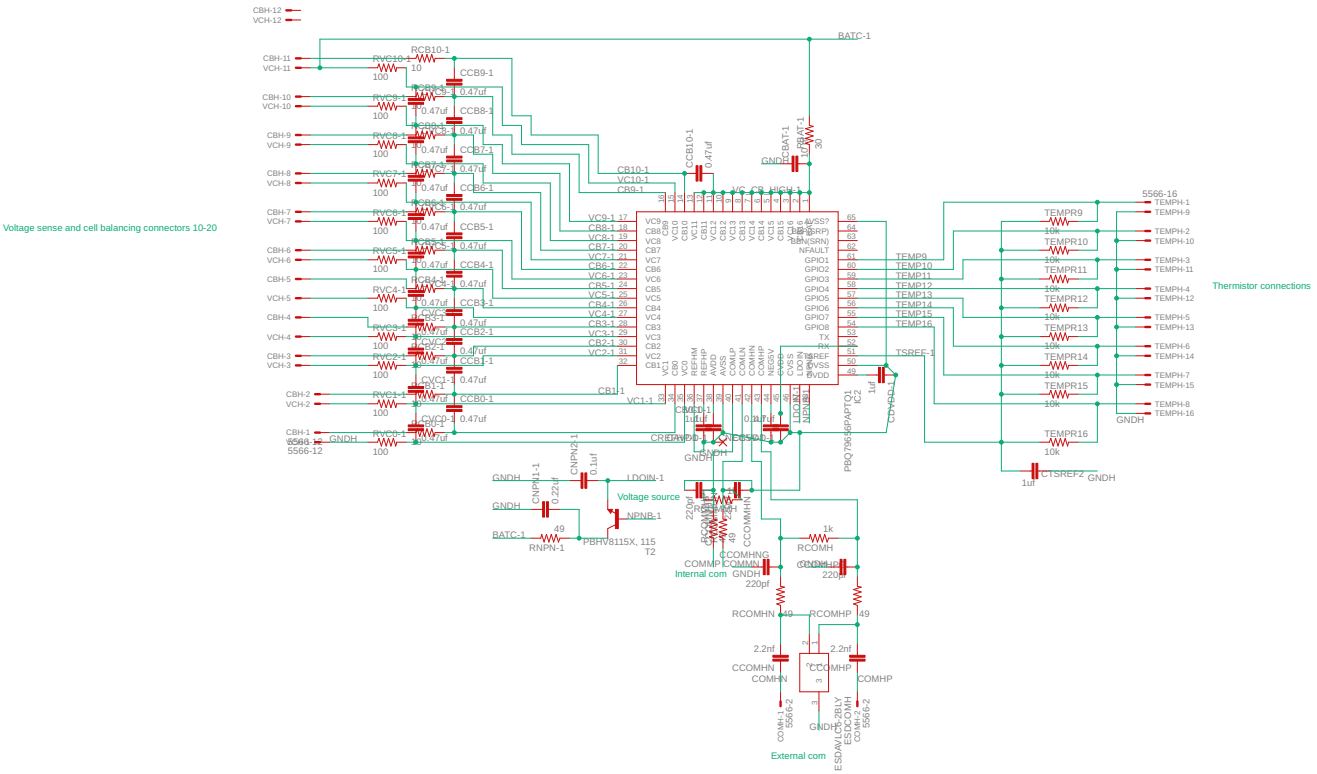
Voltage sense and cell balancing connectors 10-20
Thermistor connections
Voltage source
Internal com
External com
BATC-1
GNDH
LDOIN-1
NPNB-1
PBHV8115X, 115
T2
RNPN-1
PBQ7966PAPTQ1
IC2
TSREF-1
CTSREF2
5566-16
5566-12

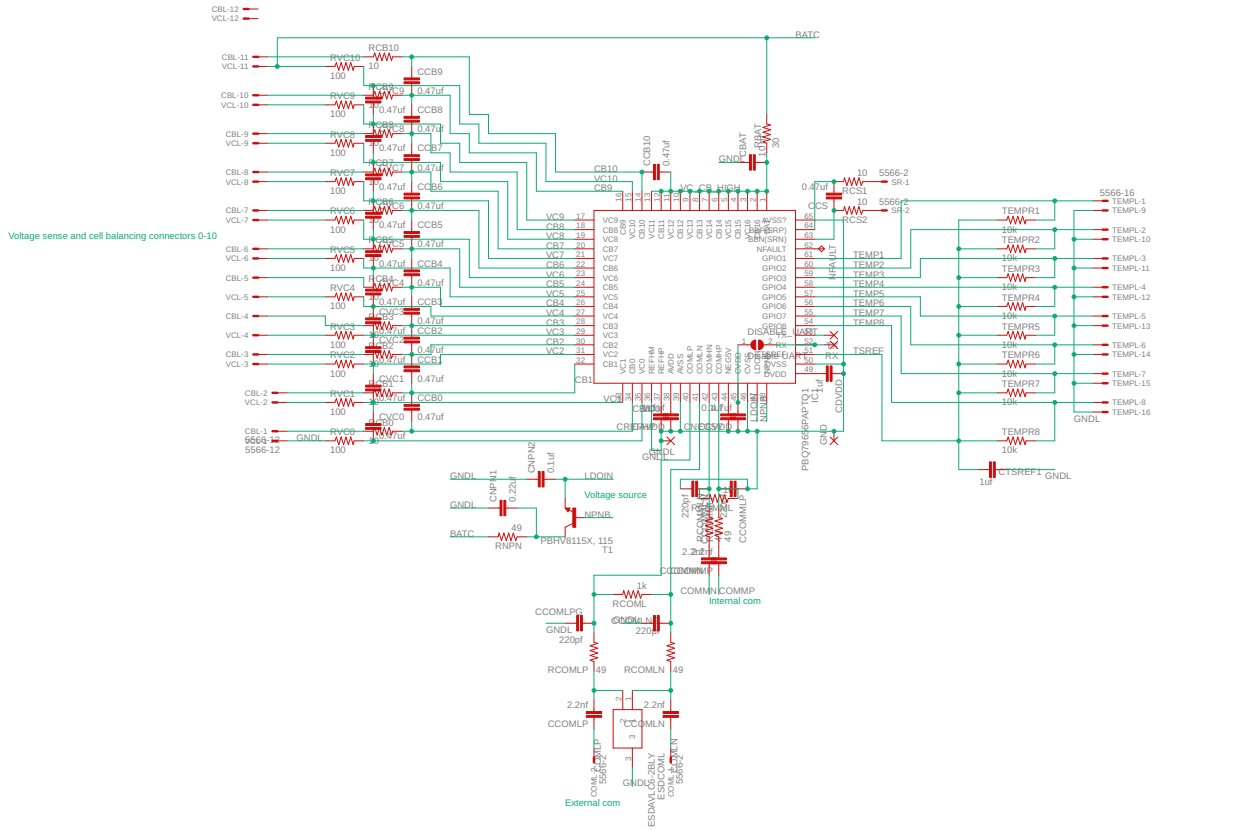
Voltage sense and cell balancing connectors 0-10
Voltage source
Internal com
External com
BATC
GNDL
LDOIN
NPNB
PBHV8115X, 115
T1
RNPN
PBQ7966PAPTQ1
IC1
TSREF
CTSREF1
5566-16
5566-12