pure sine wave inverter circuit diagram

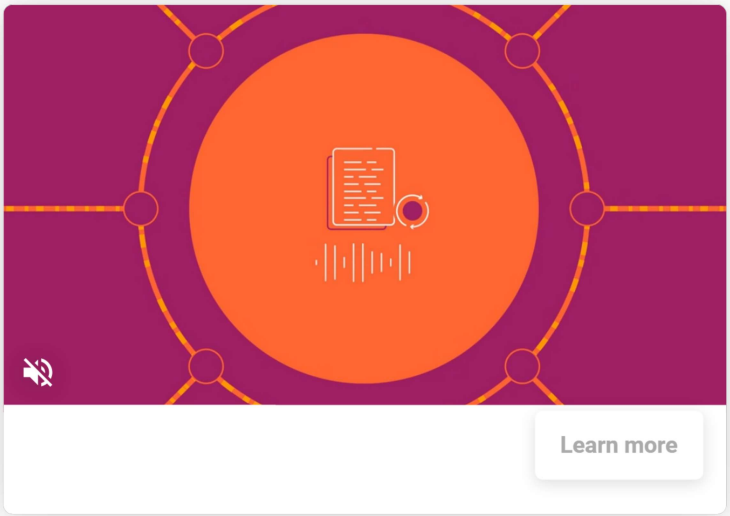

sine wave inverter circuit diagram with complete step by step program and coding, In this article I will discuss how to use push pull converter, sinusoidal pulse width modulation, h bridge and low pass LC filter to make pure sine wave inverter circuit diagram. I have already discuss all these topics in following articles.I suggest you to go through following articles before reading this article.

- **Pure sine wave inverter A-Z everything you need to make an inverter**
- **PWM controllers IC SG3525 use and application**
- **How to use MOSFET DRIVER 1R2110.**
- **DC-DC converter using push pull topology**
- **how to make H bridge and diagnose problems**
- **SPWM generation using PIC16F877A microcontroller**

Table of Contents

4. Pure sine wave inverter circuit of SPWM

Pure sine wave inverter circuit diagram working

In last article on SPWM generation I have discussed how to implement sinusoidal pulse width moudulation using microcontroller and how to select number of pulses and duty cycle of each pulse. I have used **PIC16F877A** microontroller to write code for SPWM. you can use any microcontroller you want.But procedure will remain same as I discussed in last article on SPWM generation.

I have used 100 pulses and frequency of each pulse is 20 KHz.Hence timer period of each pulse is equal to 2 * 50 us = 100 us. Therefore I have used 100 pulses and I have already mentioned in last articles. Greater the number of pulses, more pure sine wave will produce.I have calculated duty cycle for 100 pulses using same method which I discussed earlier.Array of duty cycle is :

duty cycle for hundred pulses = {0, 8, 16, 24, 31, 39, 47, 55, 62, 70, 77, 85, 92, 99, 106, 113, 120, 127, 134, 141, 147, 153, 159, 165, 171, 177, 182, 188, 193, 198, 202, 207, 211, 215, 219, 223, 226, 229, 232, 235, 238, 240, 242, 244, 246, 247, 248, 249, 250, 250};

Pure sine wave inverter circuit SPWM

The code given below is written in Mikro C. Although everything is clear in code, but if you still have any issue feel free to ask me by comment on this post.

```
const unsigned char SinLkUpTab[50]= {0, 8, 16, 24, 31, 39, 47, 55, 62, 70, 77, 85, 92, 99,
void interrupt()
{

if (dec==0)
{cnt++;
PWM1_Set_Duty(SinLkUpTab[cnt]);
}
else if (dec==1)
{cnt–;
PWM1_Set_Duty(SinLkUpTab[cnt]);
}
```

```
TMR1IF_bit = 0; // clear TMR0IF
TMR1H = 0xFF; // Initialize Timer1 register
TMR1L = 0x76;
}
void main()
{

TRISB = 0; // designate PORTB pins as output
PORTC = 0; // set PORTC to 0
PORTB = 0; // set PORTC to 0
TRISC = 0; // designate PORTC pins as output
TRISA = 0; // designate PORTB pins as output
PORTA = 0; // set PORTC to 0
T1CON= 0b00000001; // Timer1 settings
```

```
TMR1IF_bit = 0; // clear TMR1IF
```

*** Note: This is not a complete code

you can purchase complete code from me just in 40$. if you want to purchase complete code of pure sine wave inverter contact me at microcontrollerslabhub@gmail.com. If you need three phase sine wave inverter code you can also contact me.

[button-green url="http://store.microcontrollerslab.com/product/pure-sine-wave-inverter-code-and-circuit-diagram/" target="_self" position=""]Buy code in 40$[/button-green]

pure sine wave inverter circuit simulation results

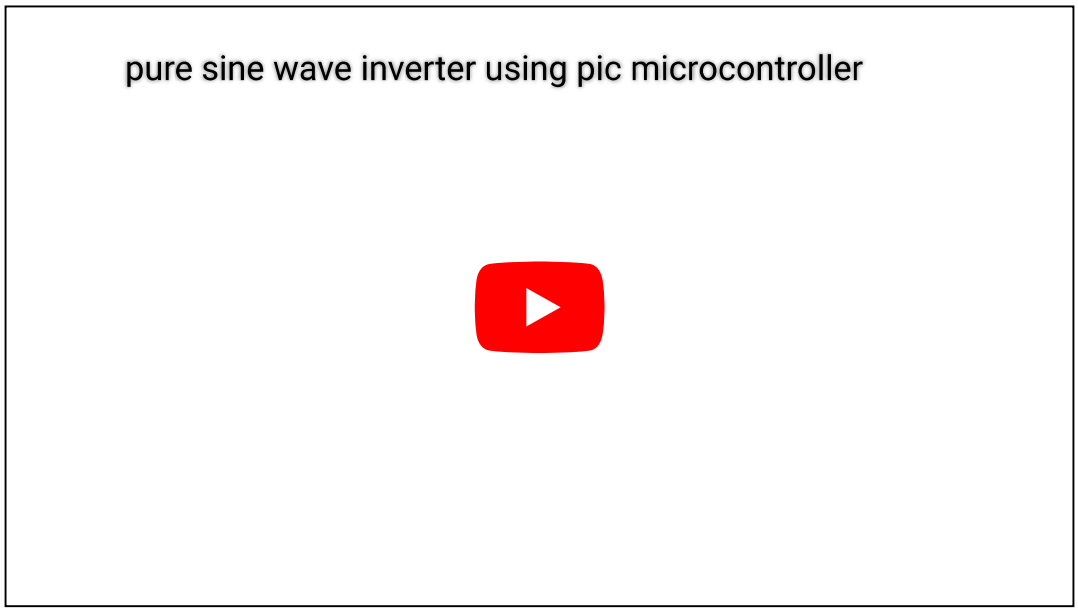

In above array I have used 50 values instead of 100. Because I have implemented the code

Pure sine wave inverter circuit of SPWM

the Diagram below shows the circuit diagram of sinusoidal pulse width modulation with two output both are on alternatively after every 10 ms.

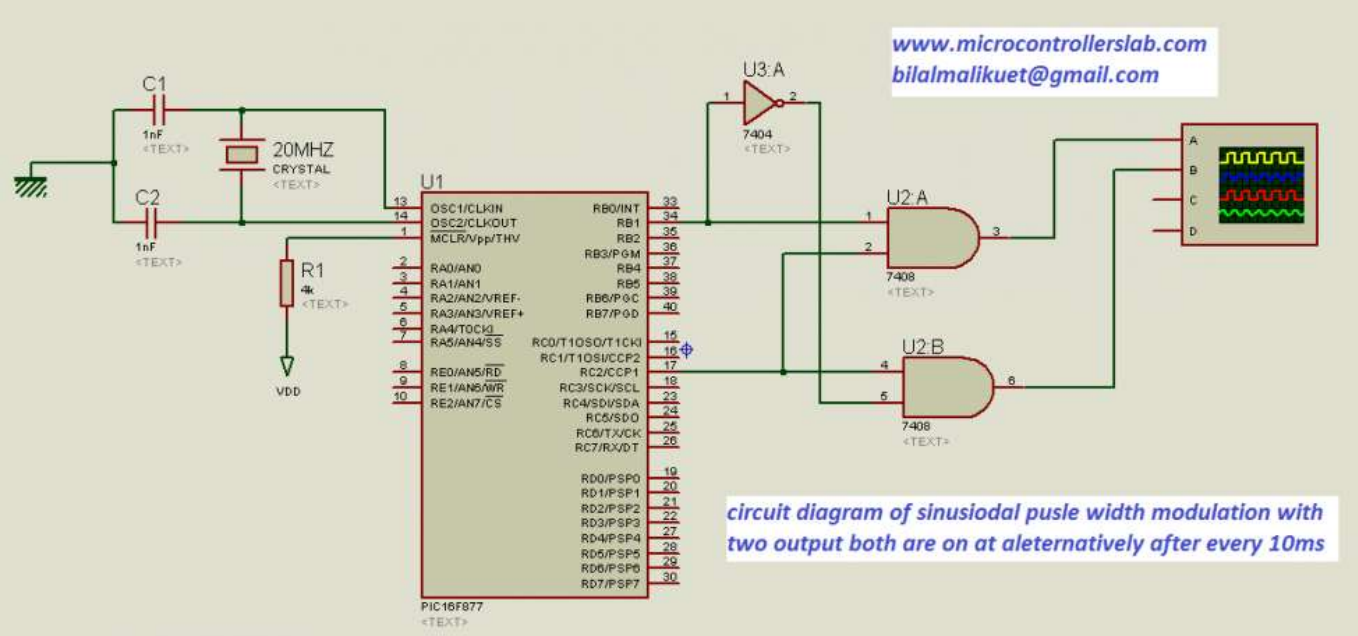

spwm circuit diagram

Output of SPWM circuit diagram

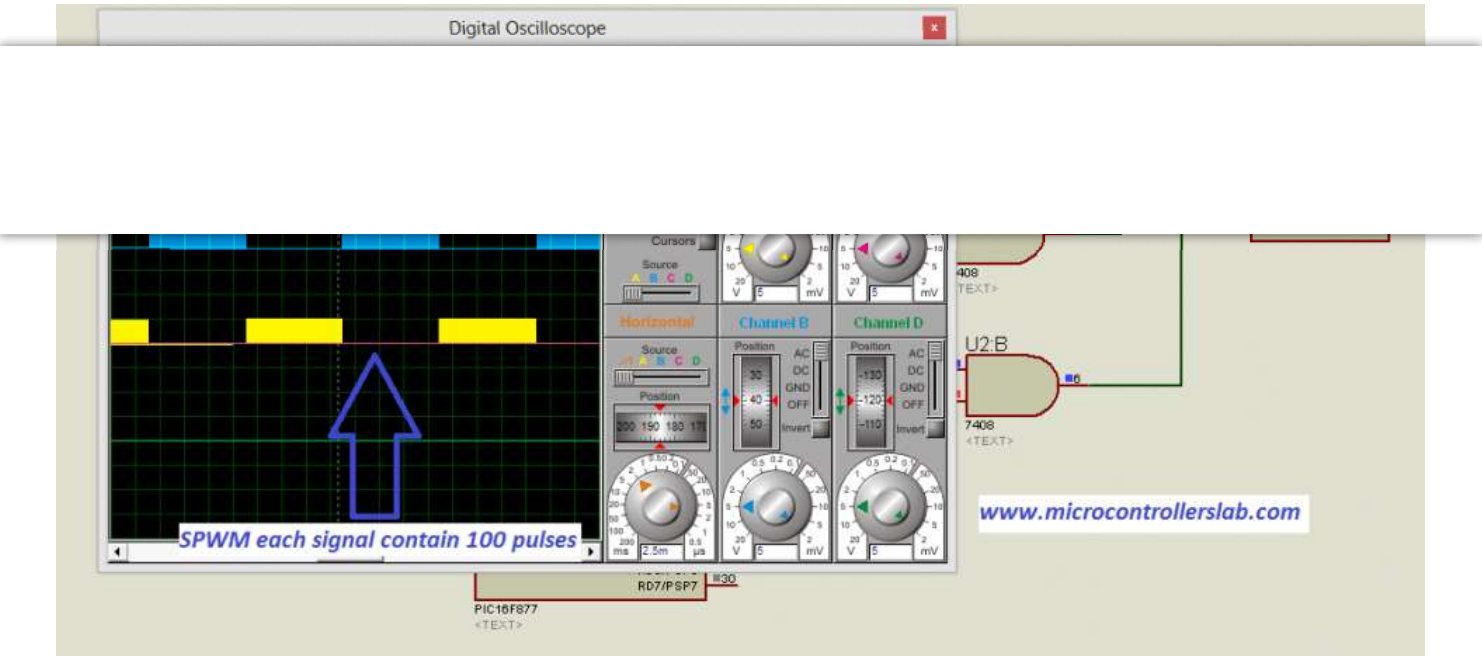

SPWM circuit output

Gating signals for H bridge

Now I will discuss how to use above circuit for generating 4 gating signals for H bridge which I have already discussed in above articles. I have taken two more outputs from same circuit to generate four gating signals for H bridge. Circuit diagram is shown below:

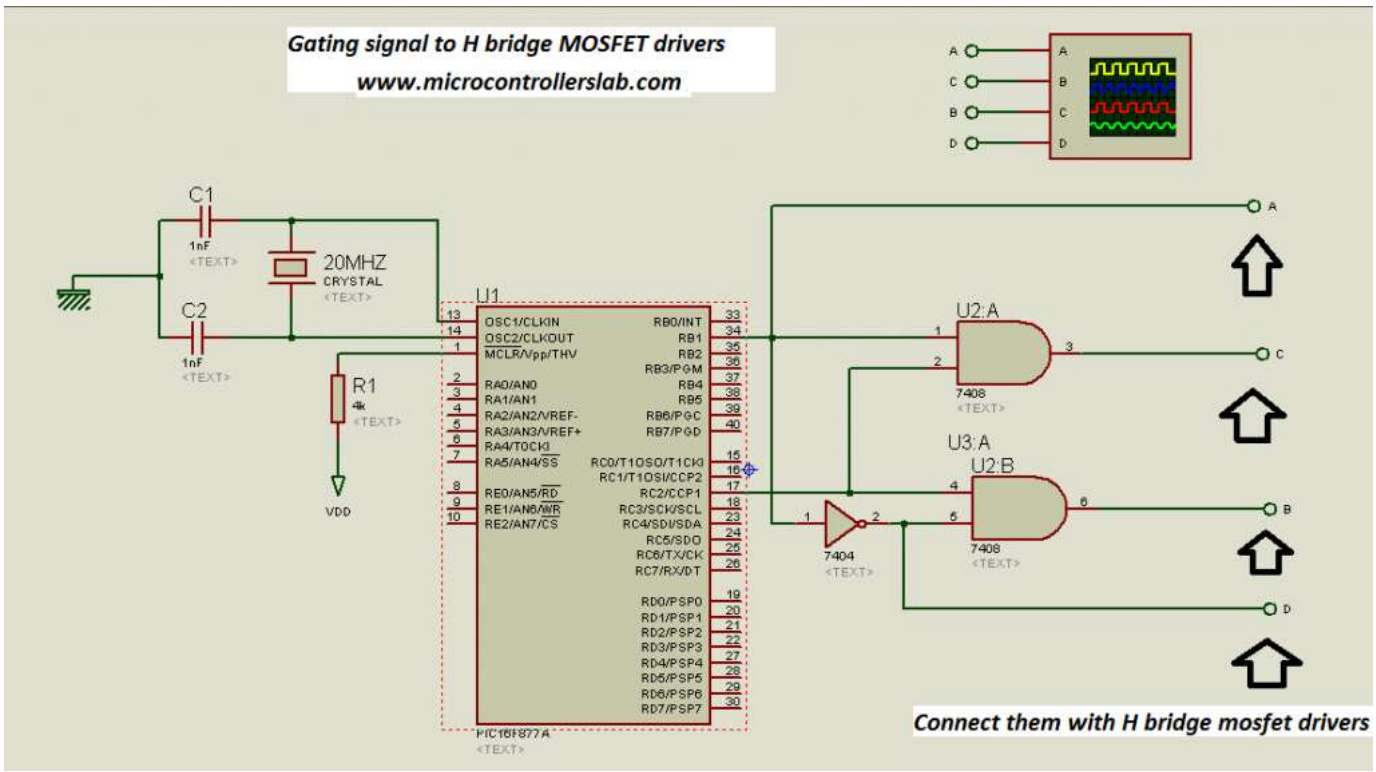

Gating signals for H bridge

Output of SPWM circuit gating signals for H bridge:

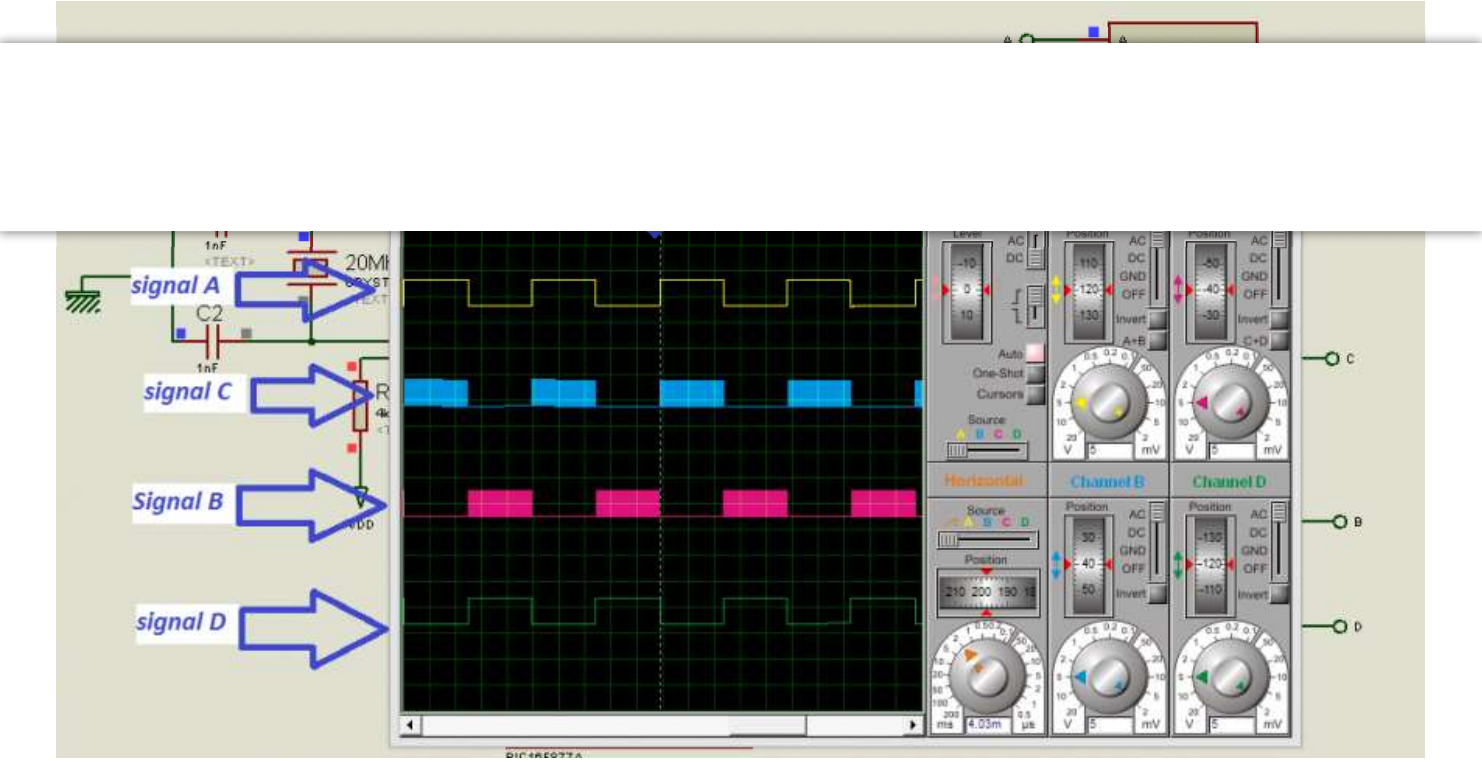

Output of SPWM circuit gating signals for H bridge

Use above circuit to drive Mosfet of H-bridge through Mosfet drivers IR2110. I have explained each and every thing about pure sine wave inverter using switch mode technique. Starting from basic overview of pure sine inverter and its types.After that I have discussed voltage mode PWM controller SG3525 use and its applications, then I explained MOSFET driver IR2210 and its use, Dc to DC converter using push pull topology and how to make H bridge using 1R2110. have written a detailed article on sinusoidal pulse width modulation. Now you can use all the knowledge you gained to make pure sine wave inverter. Just connect a low-pass filter at the output of h bridge. You will get neat and clean pure sine wave at the output.

I have got pure sine wave in my final year project " hybrid pure sine wave inverter " after connecting a LC filter at the output of H Bridge.I have LC values L= 2mH and C= 3.3uf

.Diagram of pure sine I have got in my final year project is shown in figure below:

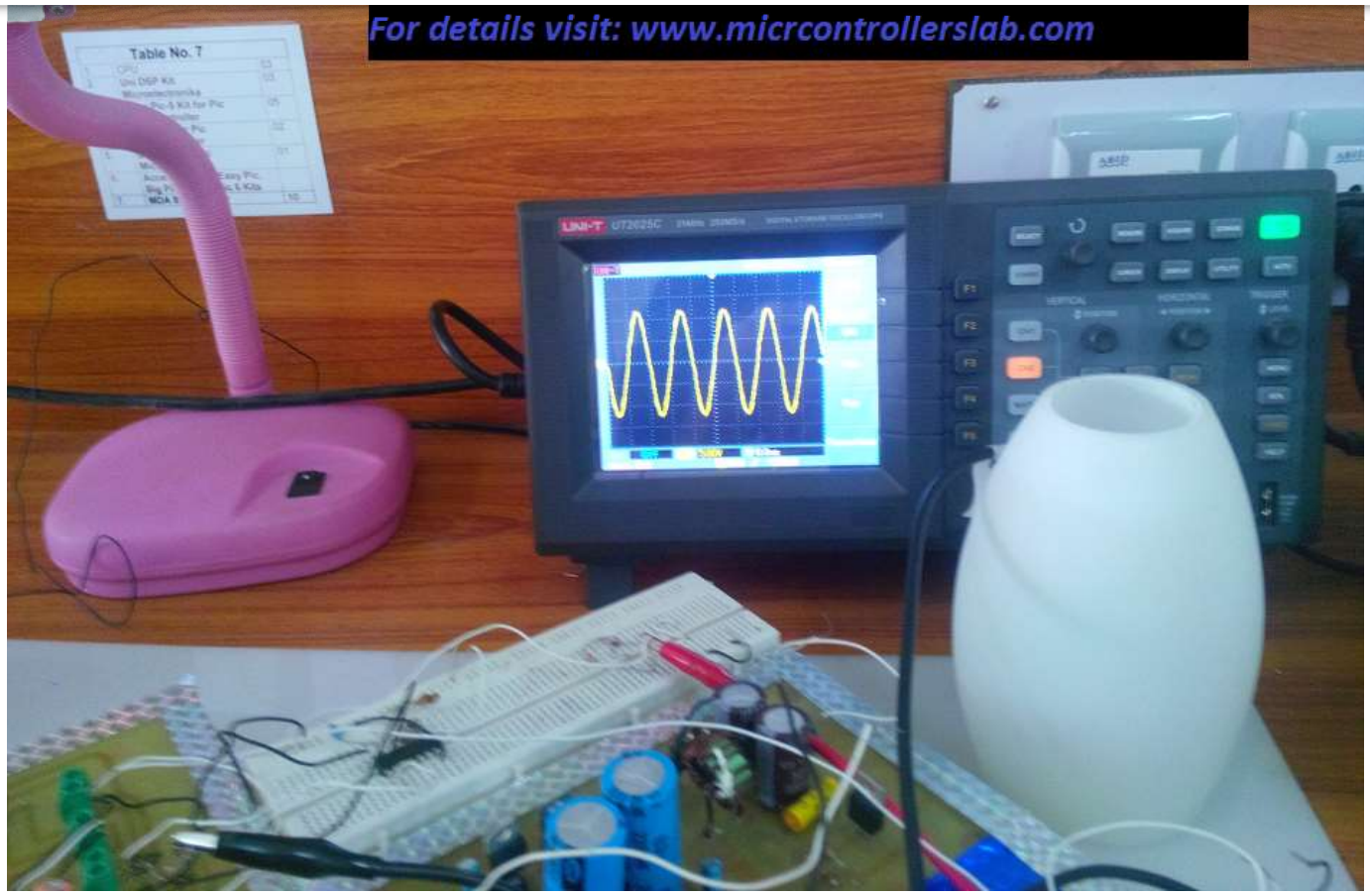

pure sine wave inverter implementation and circuit diagram

NOTE: Its difficult to simulate this circuit in Proteus . you can easily get a pulsating waves output result in Proteus. But when you connect LC filter at the output of H Bridge, Proteus will not simulate your circuit. I suggest you to make this circuit on hardware and verify results.

It take me almost 3 days to write 10 articles on pure sine wave inverter circuit using microcontroller. I hope that It will be helpful for all of you. Its all effort from my side. Now its your turn. let me know with your issues. I will be happy to reply to your comments. kindly share it on social media that's what you can do for me in return. Remember me in your prayers. Best wishes for your project 🙂

Inverters, PIC microcontroller projects, Power electronics projects

Subscribe to Blog via Email

Enter your email address to subscribe to this blog and receive notifications of new posts by email.

Email Address

SUBSCRIBE

164 thoughts on “pure sine wave inverter circuit diagram”

Emaniac

August 4, 2014 at 6:10 am

endeavors.

Reply

BILAL Malik
August 4, 2014 at 6:35 am

Ameen 🙂 Thanks for nice words.It pleasure for me.
Now I am writing series of articles on GSM interfacing with microcontrollers and 2-3 projects related to GSM like home automation system, wireless temperature sensor etc. Keep visiting my blog for more information on GSM.

Reply

Azhar Zahid
February 27, 2016 at 11:04 pm

AOA
Dear brother, Hope you are fine. I'm final year student at UET Taxila. I'm working on a project "VFD" in which I'm using the same method you described above, but I've never worked on PIC microcontrollers, I'm familiar with AVR mega32 micro controller only. I need to generate the same waveform of 50Hz SPWM for VFD so I need code for ATmega32 micro controller. I'm using AVR Studio 6 as compiler. Plz contact me if you can help. I need it ASAP. Thanks in advance. Stay blessed.

Reply

you can use the same method for every microcontroller

Reply

Mirmurtaza
November 19, 2020 at 1:27 pm

I need program and complete circuit bro for my univ project

Reply

Emaniac
August 4, 2014 at 10:51 am

Hi BILAL ALI AHMAD,
I was been trying to design a Sine Wave Inverter for a long time. Initially, I had issues with using IR2110. I'm settled with that now. My hardware is already same as yours. I tried using your code. My output is not even closer. Sine wave looks like it gradually increases, then flatted at the top and just few spikes at the negative half cycle. I also designed a filter and I'm satisfied with its filtering. But One will hardly believe it is a sine wave. Could you please help me with this?

Reply

There might be issue with your h bridge. First debug your H bridge.Follow these step:
1) check gating signals to IR2110
2) check output from IR2110. level of your gating signals should increase to about 10 volt. voltage level of spwm should be 5 volt from microcontroller.
3) check input singals to gate of mosfet and its voltage level
4) Check output at drain at output of H bridge. there should be two spwm singals and should be on at alternatively after 10ms.
5) now check output after connecting Low pass LC filter
if you are not getting any of above results .then There is a issue with your H bridge. Fix it first..

Reply

Emaniac
August 5, 2014 at 7:07 am

Hi BILAL ALI AHMAD,
That was incredible support from your side. My output at high side is not perfect, Let me fix that first. Thanks for your help.

Reply

BILAL Malik
August 5, 2014 at 8:13 am

It will be pleasure for me if your project work properly..
Good luck

Reply

Emaniac
August 5, 2014 at 10:12 am

Hi BILAL ALI AHMAD,
I settled gate driver issue. But it doesnt seem to work 🙁

Reply

jai
November 1, 2017 at 2:02 pm

hi emaniac i need this project code ,if you having please send my mail id
jaisurya446@gmail.com

because i dont have more money so please help me
am waiting for your reply
thank u

Reply

Emaniac
August 5, 2014 at 10:25 am

Hi BILAL ALI AHMAD,

Was just referring your code and found this.
why don't you just

initialize

and generate 2 complementary square waves

```
else if (cnt==0 &&dec==1)
{
PORTB.B1 =~PORTB.B1;
PORTB.B2 =~PORTB.B2;
dec=0;
}
```

This would eliminate the need of a NOT gate right?

Reply

BILAL Malik
August 7, 2014 at 6:40 am

yes you can modify it.

Reply

Emaniac
August 7, 2014 at 5:05 am

Hi BILAL ALI AHMAD,
I'm really happy that you helped me. My problem was with the driver. And I successfully solved it. I'm now able to get a pure and clean sine wave. Thank you for your support.

Reply

welcome 🙂
Its pleasure for me,my articles helped you to achieve your required output.

Reply

Hima
August 27, 2014 at 7:20 am

Hi
Nice blog. Loving it. God bless u.

Scope use at output how?

can u pls explain?

Reply

BILAL Malik
August 27, 2014 at 7:53 am

I didn't understand what you want to ask?
you mean how to use scope to see sine wave at the output of pure sine wave inverter?
simply connect oscilloscope across capacitor of LC filter.
if you asking any other thing , you are welcome to comment again.

Reply

what to the ground pins or the alligator clips?

Reply

Hima
August 27, 2014 at 11:07 am

not sure. pls help

Reply

BILAL Malik
August 27, 2014 at 2:10 pm

connect LC filter at the output of H bridge and connect scope one terminal with common point of LC filter and other any other terminal of LC filter. In other words connect scope across capacitor of scope. DC ground of battery should have no connection with output of LC filter

Reply

Hima
August 28, 2014 at 4:31 am

BILAL Malik
August 28, 2014 at 4:58 am

You must had connected across same terminals. There might be issue with your LC filter connection. You wasn't made LC filter connections properly.. Post picture of your LC filter connection with H bridge

Reply

Lillian
September 9, 2014 at 1:21 am

Hello Sir i see u are giving us a lot of help which we dont get online its like top secrct nobody wants to help on sine wave inverter. I am trying to build a sine wave from analog components sir if i get ur email I can send u the circuit so u can check through for me because I am having some heating in the fets Sir and I would really appreciate ur help thank u

Reply

BILAL Malik
September 9, 2014 at 5:02 am

Send me circuit diagram on my email I will check it
microcontrollerslabhub@gmail.com

Reply

July 10, 2015 at 12:12 pm

After building the programe, I received the message below, may you help me?
Line Message No. Message Text
12 402 ;expected, but “-” found
12 424 “}” expected “;” found
14 424 ‘}’ expected ‘}’ found
0 102 Finished (with errors): 10 Jul 2015, 14:04:05 MyProject.mcppi

Reply

Lillian
September 10, 2014 at 4:26 am

Thank u very much Sir I willsend to u now

Reply

Lillian
September 10, 2014 at 2:23 pm

Did uget the circuit sir

Reply

I got your email I will check your circuit as soon as I get free time and I will reply you after checking your circuit diagrams of pure sine wave invetrer

Reply

Lillian
September 10, 2014 at 8:19 pm

Thank u very much Sir I appreciate ur support

Reply

Suresh
August 10, 2021 at 12:26 pm

Dear sir please give me the dspic33f series sine wave technology

Reply

Lillian
September 17, 2014 at 1:32 pm

please remember to check the circuit as soon as u can Sir I would appreciate this

Reply

September 18, 2014 at 10:32 am

sorry!! Your email had been deleted mistakenly. Send me circuit diagrams again on my email id. I will check your analog base inverter circuit tomorrow.

Reply

Lillian
September 23, 2014 at 2:51 am

I have resent it Sir please check it , Thank u

Reply

BILAL Malik
September 23, 2014 at 11:45 am

check your email

Reply

Lillian
September 25, 2014 at 12:33 am

Reply

BILAL Malik
September 25, 2014 at 4:16 am

It is not possible to get sine wave through push pull if you are using high frequency transformer. I recommend you to use H bridge.

Reply

Lillian
September 25, 2014 at 1:50 pm

thank u Sir so could u send me a circuit or recomend a link to me I would really appreciate it Sir

Lillian
September 27, 2014 at 2:02 pm

Hello Sir please remember I am still waiting for the circuit . Thank u

Reply

I don't have a circuit which you required. But you can check my articles on pure sine wave inverter.

Reply

Lillian
October 2, 2014 at 4:41 pm

so u have a circuit that uses pic ic could send to me sir

Reply

BILAL Malik
October 3, 2014 at 2:49 am

Read this article for complete information about inverters ans sine wave inverter :
http://www.microcontrollerslab.com/pure-sine-wave-inverter/

Reply

Lillian
October 3, 2014 at 2:53 pm

yes sir I have read this article several times but u have not shown how to implement feedback control of the voltage sir

October 3, 2014 at 5:44 pm

I have implemented feedback control for voltage in dc dc converter stage using sg3525 IC by changing the duty cycle according to required output voltage.

Reply

Lillian
October 8, 2014 at 1:20 am

I am refering to ur circuit on sine wave using the PIC Sir . Could u show how to do the connections from a feed back transformer to the right connections on the PIC . Thats what I mean not refrering to Sg3525 ic now. Thank u

James
October 2, 2014 at 4:56 pm

How can you add feed back control tom your sine wave inverter.

Reply

BILAL Malik
October 3, 2014 at 2:45 am

There are two ways to use feedback in this inverter

volt in this inverter to produce 220 volt AC . When regulated voltage 311 volt is fed to H bridge , always 220 volt AC is produced at the output of inverter.
2) Second way to provide feedback is through programming by using different sine wave lookup tables each having increasing duty cycle if pulses. But I think its useful to use first method. Because its easy is to implement for non programmers but second can also be implemented.

Reply

Dennis
October 5, 2014 at 9:49 am

Dear Bilal,

I am working on a project that requires me to control the duty cycle of the SPWM, which is generated using FPGA. Could you help me in this regard?

Reply

Lillian
October 19, 2014 at 12:38 am

hello Sir we are still wititng on u to show us how to physically do a connection to the pic for transformer feedback. Thank u

Reply

dear sir can u explain the programming in details pls..

Reply

ZEESHAN
November 4, 2014 at 7:10 pm

hellow bilal bhai
plz tell me abt what should be the dead time between two waves generated for spwm.
and in the code of spwm which u have provided , i m having a problem in running it , it gives error even when i have copied ur code same to same.
the error is as such
“reentrancy is not allowed,pwm1_set_duty called from two threats”

Reply

MFsoft
November 5, 2014 at 6:16 pm

Hi, zeeshan
Your fix the problem, if you remove the line “PWM1_Set_Duty(0);” or remove char “\” in above line
Line above [” PWM1Init(20000); // Initialiye PWM1 module at 20kHz \ “] is ended “\” causing the program microC comment next line …

Reply

sir How can we adjust the modulation index using this method by varying amplitude of sine wave?

Reply

BILAL Malik
June 13, 2016 at 4:26 pm

by using multiple lookup tables

Reply

MFsoft
November 5, 2014 at 6:32 pm

Hi,
Ihave a similar project, I would be interesed in your sine wave output, as you tested him use your burden? and at what voltage? From my project, I observed some anomalies when I try inventor at 12 V DC my LC filter has a value of about 3mH and 3,3uF and load is about 200Ohms when i Have a nice sine wave. Once the raise voltage on 325V DC my LC filter operating at 12V DC generally does not filtred the output I have square wave. But When adjustment LC filter 3mH and 100nF a sine wave is show. Once raise C in LC sine wave is deformed. Do you have any experience with this problem? Sorry for my bad english.

Reply

November 8, 2014 at 1:05 am

Hello Sir are u still running the site we are are still waiting on u to help us here with the inverter sir

Reply

mohd
November 8, 2014 at 9:47 am

hello…i have try your code..but i have trouble in pwm1_set_duty..it shows “error could not find definition of symbol ‘pwm1_set_duty’ in file.

Reply

denis pamintuan
November 11, 2014 at 10:31 am

hello there,
its a very detailed information out there, it helps me a lot, job well done!
i want to make this inverter. i just wondering how can i make it capable to drive a 250 watts motor?
thanks for the time.

Reply

Hey I wanted to know how you selected the values of the inductor and capacitor for the the low pass filter? As in which formula did you use, how did you calculate your cut off frequency?

Reply

flexo
December 11, 2014 at 2:27 pm

hi please i want to know how you implemented your feedback system and can you use a triac to control battery charging voltage please if you have any ideas it would be very much appreciated

Reply

Motasim Masood
January 29, 2015 at 12:50 pm

Assalam o Alaikum bro……
bro i am trying to make SPWM but i am facing just failure…..
my xtal freq=22.1184Mhz….and pwm is 20khz….
i didnot understand y u Initialize the timer 1 with h=ff and l=76…..
please help me i am stuck here in generating spwm….
thanks in advance

Reply

mytheen muhammed
February 3, 2015 at 10:51 am

azzalamu alaikum

I need this code for ccs c complier.

Reply

arunrx
February 24, 2015 at 9:38 am

Hello..I have tried this code,but their is error. It shows , reentrancy Is not allowed. ‘PWM_SET_DUTY’ called from two threads..

Reply

BILAL Malik
February 24, 2015 at 9:41 am

I have checked this code myself you should check it again

Reply

Hello sir,if u have correct code send tat.above code I have pasted same to same .but it is showing error..

Reply

BILAL Malik
February 24, 2015 at 3:31 pm

what type of error?

Reply

arunrx
February 24, 2015 at 3:37 pm

It shows reentrancy is not allowed ‘PWM_SET_DUTY’ called from two threads..

Reply

BILAL Malik
February 24, 2015 at 3:38 pm

which software you are using for compiling ?

Reply

Proteus software..

BILAL Malik
February 24, 2015 at 3:57 pm

I mean which pic compiler you are using ?

Mukund
March 3, 2015 at 6:12 pm

Hi Bilal
as soon as I add the H-bridge in the simulation I get 'time step too small' error in the proteus…
please help me
what to do to remove this error??

Reply

BILAL Malik
March 3, 2015 at 6:16 pm

Its a proteus error due to low system specifications. I recommend you to built a practical circuit then check it because some systems don't able to simulate it due

to excessive CPU load

Mukund
March 4, 2015 at 11:35 am

Thanks I ll check it out!!

Reply

Mukund
March 5, 2015 at 2:40 pm

I could not found IR2110 in my proteus,what to do?
I tried with IR2112 but I think I am not getting the correct waveform at the output,
What kind of waveform should I get at the HO and LO pin of IR2110/IR2112?

Reply

BILAL Malik
March 5, 2015 at 2:47 pm

you can use IR2112 instead of IR2110. IR2112 is available in proteus

Reply

sudip
March 10, 2015 at 8:58 am

theinterrupt is working.
It will be immensely helpful if you kindly make me clear of those doubts.
Sir please reply me. why u choose TMR1H=FFH and TMR1L=76H and how the interrupt is working

Reply

BILAL Malik
March 5, 2015 at 2:57 pm

Same as input with changed voltage level around 10 volt high and 0 volt low

Reply

Mukund
March 10, 2015 at 5:26 pm

How to burn the program into the controller?
And what is the cost of that kit In USD?

Reply

arunrx
March 11, 2015 at 5:12 am

BILAL Malik
March 19, 2015 at 5:33 pm

you have to write more complicated code for it.

Reply

Prasad
March 19, 2015 at 12:34 pm

Hi Bilal

The output of the push-pull DC-DC converter stage falls drastically from 360VDC to 288VDC when w e connect a load.
Even though we have a feedback ckt. The feedback is through resistor divider.

Using SG3525 to generate PWM.

Reply

BILAL Malik
March 19, 2015 at 12:38 pm

Reply

TAYO
March 20, 2015 at 3:49 pm

Would there be any need to add dead-time to the PWM signals generated by your code or dead-time is not necessary here?

Reply

Arun kumar
March 27, 2015 at 7:09 am

how to generate 5 gating signals plz hlp ..

Reply

arunkumar
March 28, 2015 at 8:20 am

sir can u explain the code i n detail plz..

Reply

hi, how do you calculate the LC filter values?

Reply

arunrx
April 6, 2015 at 7:16 am

Sir,how to generate 5 gating signal to igbt. If u hAve code plz send me.thanks in advance...

Reply

arun kumar
April 7, 2015 at 6:15 am

Sir,I have downloaded program into Pic IC, I have done the connection in breadboard,I m nt getting output at pin 34.if I connect their wat ever dc supply 5v given to pic that only dc line we r getting plz help me.thanks in advance..

Reply

I need suggestion how to write a code for SPWM 3-phase inverter in PIC 16F876A microcontroller

Reply

luis alberto
April 7, 2015 at 8:15 pm

trate de compilar el programa para el pic 16f877 marco gran cantidad de errores

Reply

BILAL Malik
April 7, 2015 at 8:17 pm

write in english

Reply

Muhammad Faisal Khan
April 21, 2015 at 4:42 pm

Reply

BILAL Malik
April 21, 2015 at 6:39 pm

I wil try to write article on it

Reply

Bane
April 24, 2015 at 2:36 pm

Could you please explain why did you initialize timer with TMR1H=0xFF; TMR1L=0x76. According to this I calculated that interrupt will occur after (1/(20MHz / 4) * (256-118)) = 27.6us. Interrupt should occur after 25us, am I right? Please help me to understand where is the mistake.

Reply

Sohaib Elahi
May 1, 2015 at 4:41 pm

Aoa,
Your article has been very useful to my final year project as I needed to implement pure sine wave inverter of rating 220V I am facing a problem which is that the

circuit works fine if I dont connect the LC filter at the output but when I connect an

answer for it in few days and I appreciate your help already.

Reply

ashraf mostafa kamal
May 15, 2015 at 12:30 am

thanks for your perfect artile ,,i really enjoyed it, i used that code on pic16f628A and modified it not to use the not gate like that

```
portb.f0=1;
portb.f1=0;

while (1) { // endless loop

if (cnt==49 && dec==0)
{
dec=1;

}
else if (cnt==0 &&dec==1)
{
portb.f0=~portb.f0;
PORTB.B1 =~PORTB.B1;
dec=0;
```

i simulate it on proteus and it works fine, i would use this circuit without the H - bridge and trigger the two mosfets to a centre tapped transformer ,,THE QUESTION IS CAN I PUT THE FILTER ON THE TRANSFORMER OUTPUT AT THE 220V SIDE AND HOW TO CALCULATE THE VALUES OF THE FILTER
YOUR QUICK RESPONSE IS A LWAYES APPRECIATED

Reply

June 10, 2015 at 11:15 pm

Hi,
I use PIC16F877A Microcontroller. This program is not working for PIC16F877A. Is that progarm is for PIC16F877A or Not.? If it is not for PIC16F877A then Please help making SPWM Program for PIC16F877A.
Please help to solve this problem.

Reply

Jowah Lewis
July 12, 2015 at 9:16 pm

Please what pins did u use as output pins.
thanks in Advance.

Reply

umar
June 17, 2015 at 10:13 pm

excellent work, much appreciated.

Reply

thanks keep visiting webiste for more useful tutorials

Reply

bun
June 18, 2015 at 3:30 pm

Dear Bilal,

I like your blog, thank you.

Currently i am repairing an old UPS (SAFT NIFE 901-220-20) where it still use an analog component for the SPWM as well as protection circuit. I believe that it will be great if you also post a complete tutorial using analog component. In my case there is no manual or wiring documentation available. I almost get done but there is one alarming led giving information “common fault”, do you have idea what is causing this alarm message in an old ups?

I also find out that the resistor of snubber circuit on the power switch module (using R & C coupling +dc and -dc rail) get burn after i power up the UPS with no load, i check the capacitors with volt-ohm meter and no indication of short. is it common the snubber RC causing short circuit on dc rail caused by the capacitor? since there are only one Resistor and 6 capacitors (parallel of 3 pairs)

Regards,
Bun

Reply

hi sir,
i tried to build your program in MPLAB IDE.
the PIC i used was 16F877A.
its showing some errors and not getting build successully in to hex file… please help me to find a solution…
also can you help me to write a code for SVPWM(space vector PWM)..
Thank you
Sir

Reply

BILAL Malik
June 23, 2015 at 1:56 pm

above code is written in Mikro C

Reply

Mytheen Muhammed
June 25, 2015 at 10:53 am

assalamu alaikum bilal bhai,

i'm already asked you to give a SPWM code in for CCS C compiler.
any possibility?

Reply

thank you very much sir for a wonderful work here you have really try and God will reword the work of your hand.
my question is this sir, i we to connect the lowpass filter across the two output of the H-bridge or or each output with ground?

Reply

BILAL Malik
June 28, 2015 at 6:34 pm

Across the output of H bridge

Reply

Chris
July 4, 2015 at 6:10 pm

Hi BILAL ALI AHMAD,

I appreciate your efforts in providing complete explanation of the inverter.
may I ask if you can provide the above code(written in Mikro C.) to control the 2 gate drivers in arduino version?
Thank so much!
my email is chrisfwy@gmail.com

Best wishes,

BILAL Malik
July 4, 2015 at 6:16 pm

you can easily convert it itno arduino code by following above instructions

Reply

Chris
July 4, 2015 at 7:37 pm

hello,when i directly copy tour program code and build in mikroC Pro, it shows error.....
what's your program problem?

the error screen is here
https://drive.google.com/file/d/0BzFQU5_vi0LzcGxUdTg0eE9RbTQ/view?usp=sharing

Reply

Chris
July 4, 2015 at 7:56 pm

As you shown the photo i cap about your code's error,after i deleted the "-" after cnt,it can debug successfully. So,wanna to ask you, if i should delete the – after

“cnt” in your code?

Reply

ayaz
July 5, 2015 at 8:58 pm

what are the functions of cnt, cnt1,dec,inc, sqinc in the code.i don’t understand the code plz explain it.thanx

Reply

AMAL PJ
July 10, 2015 at 8:47 am

sir
please tell me what is the power specification (600va,800va 0r 1kva) how can i increase it ?

Reply

BILAL Malik
June 13, 2016 at 11:14 pm

500W

Reply

ahsan elahi
July 10, 2015 at 11:23 am

dear bilal,
will u plz confirm that if i want higher frequency (100khz aprox) on output of the inverter, then what changes i have to do in coding and hardware

Reply

BILAL Malik
July 10, 2015 at 11:32 am

change the frequency of SPWM

Reply

nelson chimwala
July 10, 2015 at 12:12 pm

Nice work brother

Reply

Please can you go a length further by providing the hex file

Reply

Jowah
July 12, 2015 at 5:34 am

C-; simply means
C = C – 1; I did that it compiled. Successfully and crated my hex file.
I hope it helps

Reply

BILAL Malik
June 13, 2016 at 11:15 pm

not free of cost

Reply

Jowah
July 12, 2015 at 5:08 am

Reply

Vijay
July 12, 2015 at 10:28 am

Hii bilal malik...
I want to simulate solar inverter using igbt
Please help me...

Reply

Muhammad Ali
August 1, 2015 at 9:24 am

Salam Sir: can u give me the software setup of mikro c in which you have compile the code and i want to ask that this inverter is of how many watts ?

Reply

siktec
August 25, 2015 at 6:26 am

Hi Bilal Malik, Please kindly show me how to add a feedback control to the circuit diagram and the code.

Reply

Faisal Ali
September 5, 2015 at 9:55 pm

Hello there, i got something in inverter circuit you shared with us, by increasing or decreasing frequency, AC magnitude changes as well on DMM. can you explain about it.

Reply

Bilal Malik
September 6, 2015 at 3:08 am

everything is clearly explained in article

Reply

thanos 703
September 20, 2015 at 8:29 pm

I want to build this inverter but i have problem with output LC filter(switching frequency of H-bridge will be 30khz and 300watt).If my calculations are right the core must be handle (1/2)*(L=0,002mH)*(1,5^2)=2,25mJ.Can i use ms-157125 ferrite core from arnold micrometals?

website http://www.micrometalsarnoldpowdercores.com

Reply

October 17, 2015 at 7:18 pm

hello you can share .hex code is not

Reply

PHẠM VĂN PHONG
October 17, 2015 at 7:18 pm

hello you can share code .hex yourself not sent to the email address you phongk8a1@gmail.com

Reply

BILAL Malik
June 13, 2016 at 11:16 pm

code is not free of cost

Reply

Chandrakant
April 2, 2016 at 8:48 pm

Thanks

Peter
May 2, 2016 at 2:22 am

Nice but it would work only for fixed load. There is not any loopback in your project.

Reply

BILAL Malik
May 2, 2016 at 11:16 am

It can be added my using multiple tables. if you need feedback too you can contact me at microcontrollerslabhub@gmail.com

Reply

kikiloaw
July 2, 2016 at 6:16 pm

https://www.dropbox.com/s/b90n3ts1yo3pard/Untitled.png?dl=0

please check my Proteus result if it is correct.,

Reply

yes correct

Reply

cyprain
July 10, 2016 at 12:17 pm

good day sir, pl can help me with circuit diagram of spwm using analog components for 24v?

Reply

Djalltrs
July 10, 2016 at 6:42 pm

Well you should have used both pwm modules so as to eliminate the and gates and inverter

Reply

Perekeme
August 9, 2016 at 2:45 am

Thank you sir, I am really benefiting from your materials. God(Allah) will bless you

faizan
September 11, 2016 at 12:11 am

AKM..
Sir i successfully converter 12 volt to 260VDC using sg3525 now i want to convert 260VDC to AC , made your circuit used atmega16 & gates but ir2110 n 2112 (fromcollege road rawalpindi) both are cheap they do not work correctly what should i do , should i test 2113 , m student of apcoms semester 3 affiliated with uet , rawalpindi

Reply

amir
September 13, 2016 at 1:01 pm

hi brother
how do you design lc filter?
this is my big problem.
thanks

Reply

Dheeraj C
September 14, 2016 at 3:00 pm

Reply

mohamed fouad
September 19, 2016 at 2:11 am

hi, bilal
i wonder if i want to implement a 3 phase inverter is pic16f887a is proper for this ?

Reply

BILAL Malik
September 19, 2016 at 7:18 pm

no you have to use microcontroller with 3 CCP modules

Reply

mohamed fouad
September 19, 2016 at 2:12 am

i think it is impossible to do this with a MCu has 2 pwm channels.

Reply

I am working on 1 kVA sine wave inverter. For that which topology is better? Push-pull, half bridge or full bridge?

Reply

Able
December 22, 2016 at 8:28 am

full bridge is better

Reply

abdul
January 11, 2017 at 5:41 am

hello sirr my name is abdulazeez am from nigeria am seen a lot of your help may allah help you and your family

Reply

vinod
January 24, 2017 at 1:08 pm

sir what type of kit we will used for this project

akshay
February 18, 2017 at 2:42 pm

Hi bilal thank you for your great effort
can you please share the simulation file in proteus , my circuit is pretty much similar and program also but its giving this error
[SPICE] TRAN: Timestep too small; timestep = 1.25e-019: trouble with node #00039.

need you help for this

Reply

Ambrogio
March 6, 2017 at 12:53 am

HI,
I will like to build up this device soon.
I would like to see the final schematics digram and have the final code.
Could you please post them to me plese ?
My mail is: iw2fvo@yahoo.com.
Thanks in advance .
regards,
Ambrogio

Reply

Hi Bilal, am very greatful for the given genarally,thanks.

Reply

Peter
April 9, 2017 at 4:44 am

Dear Bilal, thanks for great work.
Can you share complete code and schematic? I'm beginner in this type of programing. My email is arsagia@gmail.com. Thank you in advance.

Reply

mahdi
April 21, 2017 at 8:10 pm

hello my friends

I want to make a three-pahse inverter with space vector modulation.
can you help me?
I can not write avr code for this project and I want to make with ATMEGA16

My email : mohammadim0313@gmail.com

thank you.

Reply

Taha amjad
May 1, 2017 at 8:31 pm

Could please share the complete circuit diagram or proteus simulation file.
thank you

Reply

Phong
May 24, 2017 at 4:48 am

Hi, i am researching the invecter circuit, but not successful .. please help me to write code for pic 16f877A (220VAC – 50HZ) offline. I look forward to your help … thank you

Reply

robotfx oco news
August 18, 2017 at 11:39 am

I really wanted to compose a simple comment so as to say thanks to you for those wonderful instructions you are posting on this site. My particularly long internet lookup has at the end of the day been paid with pleasant insight to write about with my good friends. I would say that many of us site visitors actually are definitely lucky to exist in a very good site with so many wonderful professionals with insightful points. I feel quite grateful to have discovered the webpages and

look forward to plenty of more amazing times reading here. Thanks once more for

ravindra balme

November 26, 2017 at 12:32 pm

Hello sir,
thanks for this blog .
i want run up to 1000watt real time ac appliances by using pure sine wave inverter .
is it possible by using your circuit and code??
is it reliable bz i want to use for run my home real time ac appliances.

Reply

GURU

November 28, 2017 at 9:53 pm

Dear sir, thanks for great work.
Can you share code and schematic? I'm beginner in this type of programing. My email is guruhebbar995@gmail.com. Thank you in advance.

Reply

Imran

February 19, 2018 at 10:29 pm

Guru
February 19, 2018 at 11:19 pm

I need normal PWM sigal, i am using pic microcontroller (pic16f1503) & transformer design. I try to make a 200watt inverter.

Reply

DUKI MATONDO
July 5, 2018 at 6:02 pm

Good day Mr Bilal Malik
I am doing a final year project with this title design and construction of 48V DC TO 240V AC conversion adapter for home appliances. I just what to know if it is possible to use integrated circuits like SG3525 OR other types instead of PIC micro controllers to generate pulse width modulation for the mosfets H bridge circuit. because I have not enough knowledge in programming the PIC. I am using switch mode power supply topology in my project. in addition which type of simulation software can I use for my project.

Reply

judekingsley
February 20, 2019 at 8:31 pm

Reply

sasikaran.s
July 18, 2019 at 9:40 am

hello sir ,
i am doing a project for speed control of single phase induction motor using pic16f877a , if u please tell me for which driver and inverter circuit can i use this project

Reply

hard
August 21, 2019 at 12:54 pm

hello sir how to simulate sine wave inverter on proteus

Reply

suresh
August 10, 2021 at 10:38 pm

Reply

Johnson Funani
November 16, 2021 at 4:44 pm

Good day Sir, need your help how can I get access to the source codes for the PICs used on 3KVa and 5KVa inverters

Reply

Leave a Comment

Name *

Email *

Website

☐ Notify me of follow-up comments by email.

☐ Notify me of new posts by email.

Search …

Archives

October 2022

September 2022

August 2022

May 2022

April 2022

March 2022

February 2022

January 2022

December 2021

November 2021

October 2021

September 2021

August 2021

July 2021

June 2021

May 2021

April 2021

March 2021

February 2021

January 2021

December 2020

November 2020

October 2020

September 2020

August 2020

May 2020

April 2020

March 2020

February 2020

January 2020

December 2019

November 2019

October 2019

September 2019

August 2019

July 2019

June 2019

May 2019

April 2019

March 2019

February 2019

January 2019

December 2018

November 2018

October 2018

September 2018

June 2018

May 2018

April 2018

March 2018

February 2018

December 2017

November 2017

October 2017

September 2017

August 2017

July 2017

June 2017

May 2017

April 2017

March 2017

February 2017

January 2017

December 2016

November 2016

October 2016

September 2016

April 2016

March 2016

December 2015

November 2015

October 2015

September 2015

August 2015

July 2015

June 2015

May 2015

April 2015

March 2015

February 2015

January 2015

December 2014

November 2014

October 2014

September 2014

August 2014

July 2014

ADVERTISEMENT

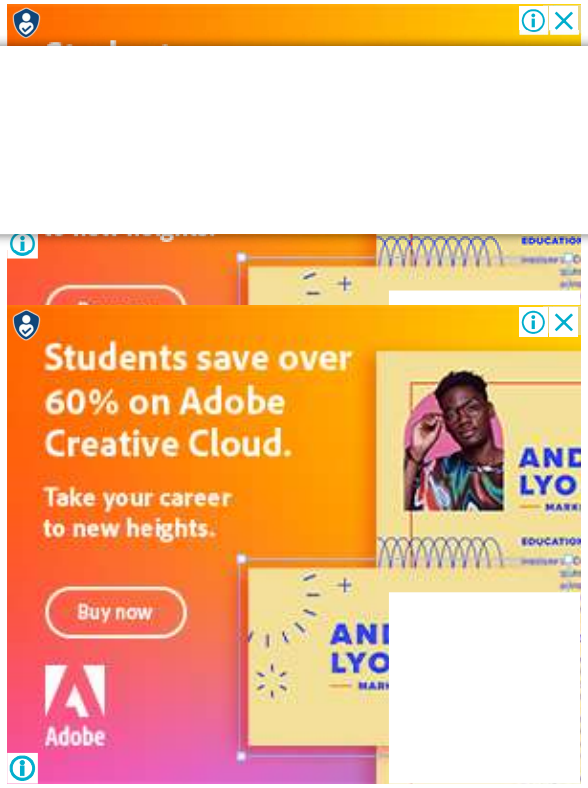

ADVERTISEMENT

Subscribe to Blog via Email

Email Address

SUBSCRIBE

PCB Assembly Services

ADVERTISEMENT

Categories

Select Category

ADVERTISEMENT

Recent Posts

HC-05 Bluetooth Module with STM32 Blue Pill using STM32CubeIDE

STM32 Blue Pill SPI Communication with Master Slave Example

STM32 Blue Pill Timer in PWM Mode with LED Dimmer Example

STM32 Blue Pill Timer in Counter Mode with STM32Cube IDE and HAL Libraries

STM32 Blue Pill Timer Encoder Mode with Rotary Encoder Example

ADVERTISEMENT

DigitalOcean
by digitalocean.com
Try Free

NOW
PLAYING

Copyright © 2013-2022 Microcontrollerslab.com All Rights Reserved