ResearchGate

See discussions, stats, and author profiles for this publication at: https://www.researchgate.net/publication/332183333

The Industrial Ethernet and Arduino Board based Solution for controlling systems

Thesis · June 2016

DOI: 10.13140/RG.2.2.34657.35689

CITATIONS
0

READS
9,850

1 author:

Oussama Messai
Université Lumiere Lyon 2

17 PUBLICATIONS **70** CITATIONS

SEE PROFILE

All content following this page was uploaded by Oussama Messai on 03 April 2019.

The user has requested enhancement of the downloaded file.

وزارة التعليـــم العالـــي و الـبحـــث العلمـــــــــي

Ministry of **H**igher **E**ducation and **S**cientific **R**esearch

UNIVERSITY OF **F**ERHAT **A**BBAS **S**ETIF 1
Institute of **T**echnology
Electrotechnical **D**epartment

جامعـــة فرحات عباس سطيـــف 1
كليـة التـكنــولــوجيـــا
قسم الإلكترو تقنية

Master's Thesis

N. Ref.: MAC/16/2016

Presented in Electrotechnical Department

Field : **S**cience and **T**echnology
Branch : **A**utomatic
Specialty : **C**ontrol of **I**ndustrial **P**rocesses

Realized by:

M. MESSAI Oussama

Theme

The Industrial Ethernet and Arduino Board based Solution for controlling systems

*Supported on 23/***06/2016** *in front of the examining commission made of:*

Pr. MOSTEFAI M.	Lecturer	at the University of Setif 1	President
Mrs. GHEDJATI K.	Teacher	at the University of Setif 1	Director of thesis
M. DAAS A.	Teacher	at the University of Setif 1	Examiner

Dedications

With the help of Allah the Most Gracious and the Most Merciful.

It is my genuine gratefulness and warmest regard that I dedicate this work

To the loving memory of my mother, who introduced me

the joy of reading from my birth.

To my precious father, the source of

support and encouragement.

To my brothers « Mohammed, Adel, Anis »

To my sisters « Iman, Soundous».

To all my family.

To all my friends.

To you….

Messai Oussama.

Acknowledgement

I would like to express my deep gratitude to my supervisor, Mrs Keltoum GHEDJATI who gave me the opportunity of doing research in a very interesting and challenging area at Industrial Networks.

Special thanks are to my brother Dr. Mohamed Lamine MESSAI for his review and suggestions for improving the quality of my master thesis.

I am grateful to Dr. Zitouni MESSAI for his collaborations, discussions and suggestions during the course of my research.

My eternal gratitude goes to my father Menaouer MESSAI, my brothers and sisters, the whole family, friends, and everyone who encouraged and supported me in these years.

Setif ALGERIA, 8th July 2016

Summary

GENERAL INTRODUCTION XI

Chaptre 01 ..... *1*

THE INDUSTRIAL NETWORKS 1

1.1. Introduction 1
1.1.1. Background 1
1.2. Thesis Scope 2
1.2.1. Communication Protocols 2
1.2.2. Simulation Approaches 3
1.2.3. Network Applications 3
1.3. Industrial Automation 3
1.3.1. Programmable logic controller 4
1.3.2. Centralized and Decentralized Concepts 4
1.3.3. Advantages and disadvantages 5
1.4. Computer Integrated Manufacturing (CIM). 6
1.4.1. The Hierarchical 6
1.4.2. Advantages of CIM 7
1.5. OSI Model and the TCP/IP protocol suite 7
1.5.1. OSI Model (Open System Interconnection) 7
1.5.2. TCP/IP (Transmission Control Protocol)/(Internet Protocol) 7
1.6. OSI Model in the Industrial Network 8
1.6.1. Physical Layer 8
1.6.2. Data Link Layer. 9
1.6.3. Network Layer. 9
1.6.4. Transport Layer. 9
1.6.5. Presentation Layer 9
1.6.6. Session Layer. 9
1.6.7. Application Layer 9
1.7. Network Address 10
1.7.1. Logical Address 10
1.7.2. Physical Address 10
1.8. Industrial Networks 11
1.8.1. Topology 11
1.8.2. Network Interconnection Devices 12
1.9. Conclusion 12

Chapter 02 ..... *14*

THE INDUSTRIAL ETHERNET 14

2.1. Introduction 14
2.2. The Industrial Ethernet (IE) 14
2.2.1. The PROFINET (Process Field Net) 14
2.2.2. PROFINET Function Classes 15
2.2.3. PROFINET IO (Input/Output) 15
2.2.4. PROFINET CBA (Component Based Automation) 16
2.2.5. PROFINET protocols 17
2.2.6. PROFINET Cables 17
2.2.7. PROFINET Connectors 19
2.2.8. Objectives of PROFINET 20
2.3. Different types of Programming language 21
2.3.1. Ladder Diagram (LAD) 21
2.4. Simulation Concept 23
2.5. SCADA (Supervisory Control And Data Acquisition) 23
2.5.1. Human Machine interface (HMI) 24
2.5.2. Security Issues 25
2.6. Introduction to Totally Integrated Automation (Tia) Portal software 25
2.6.1. SIMATIC Step 7 26
2.6.2. SIMATIC WinCC flexible 26
2.7. Motor Control with Status indicator via PROFINET 26
2.7.1. Siemens S7-300 (CPU 314C-2 PN)-PLC- 27
2.7.2. Siemens MP (Multi Panel) 177 6” (inch) Touch 27
2.7.3. Network Architecture 28
2.7.4. The Communication between HMI and PLC 29
2.7.5. Getting Started With Tia portal and Devices Configuration 30
2.7.6. PLC programming 32
2.7.7. HMI Screen programming 34
2.8. Conclusion 36

Chapitre 03 ..... *37*

THE INDUSTRIAL ETHERNET WITH MICROCONTROLLERS 37

3.1. Introduction 37
3.2. The Microcontrollers 37
3.2.1. ATmega328P 38
3.2.2. Arduino Toolkit. 39
3.2.3. Arduino Uno 40
3.2.4. IDE Arduino 41
3.2.5. Why Arduino? 42
3.2.6. The Proteus Design Suite software 42
3.2.7. Objectives 43
3.3. Universal Asynchronous Receiver/Transmitter (UART) 43
3.3.1. Serial Communication. 43
3.3.2. Wireless Communication. 44
3.3.3. Serial Peripheral Interface (SPI) 44
3.4. The web server 45
2.4.1. Hypertext Transfer Protocol (HTTP) 45
2.4.2. Web page 46
3.5. Theory and Operation of Ethernet 46
3.5.1. Network Interface Card (NIC) 46
3.5.2. Carrier Sense Multiple Access/Collision Detection (CSMA/CD) 47
3.5.3. Carrier Sense Multiple Access/Collision Avoidance (CSMA/CA). 47
3.5.4. Ethernet Packet 48
3.5.5. Form Ethernet to a Transport Service. 49
3.5.6. Data Encoding Techniques. 50
3.6. Motor Control with Arduino Uno board Via Ethernet Network 52
3.6.1. Hardware 52
3.6.2. Network Architecture 55
3.6.3. Algorithm 56
3.6.4. Circuit design 58
3.6.5. Programming and libararies 58
3.6.6. Simulation with Proteus software 59
3.6.7. Implementation of the Control System. 60
3.6.8. Comparison with Siemens solution. 62
3.7. Conclusion 63

GENERAL CONCLUSIONS AND OUTLOOK 64

List of Figures

Figure 1.1. World analysis of implantation of Industrial Network protocols. 2
Figure 1.2. Machines using protocol to communicate. 2
Figure 1.3. PLC block diagram. 4
Figure 1.4. Centralized and Decentralized concepts.. 5
Figure 1.5. Hierarchical of CIM. 6
Figure 1.6. The seven-layer OSI model. 8
Figure 1.7. The four-layer TCP/IP model.. 8
Figure 1.8. Different types of network topologies 11
Figure 1.9. Worldwide growth in industrial networking by technology 2011-2016 by millions of node.. 13
Figure 2.1. PROFINET Function classess. 15
Figure 2.2. PROFINET IO and PROFINET CBA 17
Figure 2.3. Twisted Pair cable components 18
Figure 2.4. Fiber Optic cable components 19
Figure 2.5. Types of copper-based cables connectors 20
Figure 2.6. Types fiber optic cables connectors 20
Figure 2.7. Ladder diagram 22
Figure 2.8. SCADA (Supervisory Control and Data Acquisition) architecture 24
Figure 2.9. PLC Block diagram with Human Machine Interface 24
Figure 2.10. TIA Portal software, the Portal view 25
Figure 2.11. TIA Portal software, the Project view 26
Figure 2.12. Siemens S7-300 (CPU 314C-2 PN/DP) view 27
Figure 2.13. Siemens MP (Multi Panel) 177 6" (inch) Touch view 28
Figure 2.14. Motor Control via PROFINET Network, bus topology 29
Figure 2.15. Sending and Receiving information using TCP/IP protocol 29
Figure 2.16. TIA portal software, creating project 30
Figure 2.17. TIA portal software, adding new device 31
Figure 2.18. TIA portal software, selecting device 31
Figure 2.19. TIA portal software, devices view 31
Figure 2.20. TIA portal software, Ladder programming tools 32
Figure 2.21. TIA portal software, Ladder programming process 32
Figure 2.22. The tags table 32
Figure 2.23. Ladder program, Start and Stop commands 33
Figure 2.24. Ladder program, blinking lamp 33
Figure 2.25. TIA portal software, HMI programming tools 34

Figure 2.26. TIA portal software, HMI programming process 34
Figure 2.27. The final HMI screen 35
Figure 2.28. Network view, TIA portal software 36
Figure 3.1. The microcontroller basic components.....37
Figure 3.2. ATmega328P microcontroller.....38
Figure 3.3. MCU Architecture of ATmega32.....39
Figure 3.4 Arduino Uno Board components (Photograph).....40
Figure 3.5. Arduino IDE Software.....41
Figure 3.6. Serial Communications.....43
Figure 3.7. Single master, single slave SPI implementation.....44
Figure 3.8. Web Server architecture.....45
Figure 3.9. TCP/IP suite using HTTP Protocol in Application layer.....46
Figure 3.10. Wireless network, hidden node problem.....48
Figure 3.11. Ethernet Packet.....48
Figure 3.12. Interconnection devices, Bridge operation.....50
Figure 3.13. Interconnection devices, Hub operation.....50
Figure 3.14. Interconnection devices, Switch operation.....50
Figure 3.15. An example of bipolar encoding, known as AMI (Alternate mark inversion).....51
Figure 3.16. An example of Manchester encoding showing both conventions.....51
Figure 3.17. An example of Differential Manchester encoding.....51
Figure 3.18. ENC28j60 Ethernet module (Photograph).....53
Figure 3.19. ENC28j60 circuit diagram.....53
Figure 3.20. The Relay module (Photograph).....54
Figure 3.21. Relay Wiring Diagram.....54
Figure 3.22. Motor control with Arduino Uno board architecture.....55
Figure 3.23. Web Page block diagram.....56
Figure 3.24. Controlling block diagram.....57
Figure 3.25. Motor control, circuit design.....58
Figure 3.26. IDE software, Programming process.....59
Figure 3.27. Proteus Design Suite software, Simulation process. 60
Figure 3.28. Switch OFF command (Photograph).....60
Figure 3.29. Switch ON command (Photograph).....61
Figure 3.30. HMI (Computer view) with wired communication.....61
Figure 3.31. HMI (Smart phone view) with wireless communication.....62

List of Tables

Table 1.1 Advantage and Disadvantages of Automation. 5
Table 3.1. Arduino Uno board parameters 40
Table 3.2. ENC28j60 Ethernet module parameters. 53
Table 3.3. JQC-3FF-06 relay module parameters. 54
Table 3.4. Comparison table 62

List of Abbreviations and Symbols

Acronyms

CPU	Central Processing Unit
IT	Information Technology
Profibus	Process Field Bus
Profinet	Process Field Net
PLC	Programmable Logic Controller
TCP	Transmission Control Protocol
UDP	User Datagram Protocol
IP	Internet Protocol
DCP	Discovery and Configuration Protocol
DHCP	Dynamic Host Configuration Protocol
CIM	Computer Integrated Manufacturing
OSI	Open System Interconnection
RAM	Read Access Memory
ROM	Read Only Memory
LAN	Local Area Network
MAC	Media Access Control
PC	Personal Computer
OS	Operating System

IE	Industrial Ethernet
MPI	Message Passing Interface
RT	Real Time
IRT	Isochronous Real Time
IEEE	Institute of Electrical and Electronics Engineers
IO	Input Output
AO	Analog Output
AI	Analog Input
DO	Digital Output
DI	Digital Input
CBA	Component Based Automation
GSD	General Station Description
PCD	PROFINET Component Description
SCADA	Supervisory Control and Data Acquisition
HMI	Human Machine Interface
TIA	Totally Integrated Automation
LAD	Ladder Diagram
STL	Instruction List
FBD	Function Block Diagram
SFC	Sequential Function Chart
MCU	Microcontroller Unit

ALU	Arithmetic Logic Unit
LED	Light Emitting Diode
PMW	Pulse Width Modulation
IDE	Integrated Development Environment
IoT	The Internet of Things
TIA	Totally Integrated Automation
WWW	World Wide Web

GENERAL INTRODUCTION

The automation field is at one of the greatest turning points in its history. Field communication systems are moving towards more flexible Ethernet based communication standards from the old serial communication standards. These new Ethernet based technologies demand a new way of thinking from both network and automation engineers.

As the demand for Ethernet continues to rise in industrial field, so does the demand for network engineers, who are familiar with industrial environments and their special requirements for networks.

One of the famous Industrial Ethernet standards is Profinet, which is the successor to the widely used field communication standard Profibus. The first purpose of this thesis is to get familiar with Profinet, get to know how to design and use Profinet network through Siemens software and hardware's and to produce general guidelines for Ladder programming language and Human Machine interfacing design.

The second objective of this work is to introduce an embedded system with low cost and energy for specific industrial applications that could replace Siemens solution (Profinet).

The thesis starts with a brief look at the industrial networks and automation, then covers some basics of Ethernet technology along with the networking reference models OSI and TCP/IP.

Chapter I touches upon the development of Ethernet and its advancement, also contains some definitions of networking standards.

Chapter II explains in detail the types of Profinet networking solution. Introduce some basic functions in Ladder programming language, then it talks about the equipment used for controlling systems and the results obtained from simulation software.

Chapter III contains microcontrollers in detail, Arduino Uno board, and discusses the theory and operation of' Ethernet, which deals with the Network Interface Cards (NICs), coding, interconnection devices, then it introduces our networking solution.

Chapter 01

THE INDUSTRIAL NETWORKS

1.1. Introduction

This chapter introduces the main subjects in the Industrial Networks and their protocols, we will give an overview of the study, and also we'll have a quick look at some hardware and software tools used in this thesis.

1.1.1. Background

In the last few decades the industrial networking was based on a well-known network protocols such as Modbus, Profibus, AS-I, and a lot of another protocols, this variety comes to cover any type of an industry, each one has its own characteristics and a different configurations to solve specified automation factory problems.

During this evolution, many factories turns to use Ethernet protocol or a hybrid Ethernet networks because it's cost-effective, world-wide standard and easy to implement and use, occur to the main purpose of using this latest protocol (Ethernet) is the ability of interconnect devices ranging from a small controllers and programmable logic controllers (PLCs) to a large data storage nodes and centralized operations control centers.

The circle in Figure 1.1 shows the most common Ethernet-based industrial networks which are used around the globe:

- According to recent study the largest used protocol is Ethernet/IP by 30%.
- Then Profinet 28%.
- Modbus TCP/IP 22%.
- PowerLink 11%.
- EtherCat 4% and others about 5%.

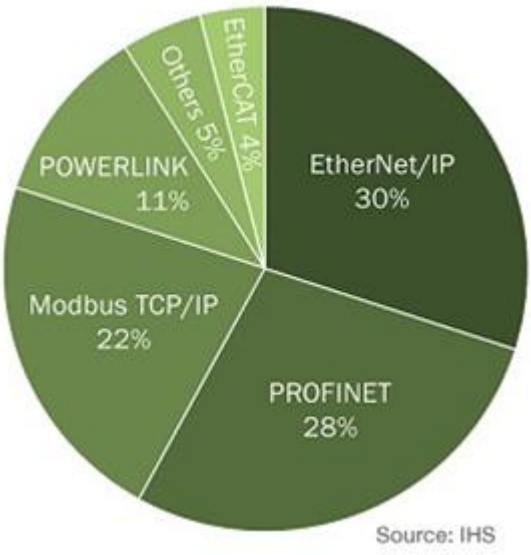

Figure 1.1. World analysis of implantation of Industrial Network protocols [2].

1.2. Thesis scope

In this thesis, we address three subjects in networked automation i.e., *Communication Protocols, Simulation Approaches, Network applications.*

1.2.1. Communication Protocols

Communication protocol in a simple explanation is a specific formats and rules, which lies two or more machines together so they can talk to each other, it could be either different types of machines or operating systems, but for sure they're using the same communication protocol.

Those rules and format are defined in algorithms and the operating systems usually contain software or communication process of these protocols.

The communicating systems (protocols) which allow to exchange messages are also cover the authentication, error detection and correction.

Some of the best known protocols:

- Transmission Control Protocol (TCP).
- User Datagram Protocol (UDP).
- Hyper Text Transfer Protocol (HTTP).
- File Transfer Protocol (FTP).

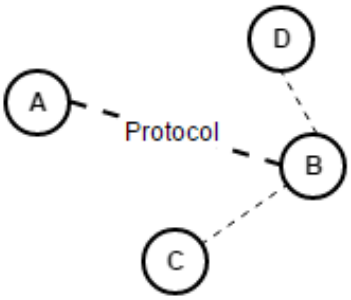

Figure 1.2. Machines using protocol to communicate.

However, the research has been never stopped the developing of communication protocols, such as these protocols developed lately for internet of things:

- CoAP (Constrained Application Protocol).
- MQTT (Message Queuing Telemetry Transport).

1.2.2. Simulation Approaches

Network development is growing rapidly in both size and complexity, and this push researchers to design new protocols and algorithms.

The field experiment needs embedded software and bunch of hardware prototypes, but it needs too much time and money to come up with the desired network, in order to avoid this issue they should use a simulators.

We names some familiar Simulators Software:

PROTEUS: by Labcenter Electronics, it is an electronic design automation.

SIMATIC STEP 7: developed by Siemens Company, used to program and simulate industrial networks and their applications, in case of using Siemens products.

TIA PORTAL: latest software provided by Siemens Company as well, they put all in one, simulation, programming, diagnostics, it's smooth and lovely.

1.2.3. Network Applications

The biggest network application today and for many years and probably forever is the internet (international network), and another plentiful applications such as e-mail, web, instant messaging, real-time videos, conferences……etc.

Obviously those applications make our daily lives easier and a lot of problems has been solved, also they opened new options in the factories filed.

1.3. Industrial Automation

Industrial automation is the use of control systems, such as computers or robots, and information technologies for handling different processes and machineries in an industry to replace a human being.

1.3.1. Programmable logic controller

A programmable logic controller (PLC) or programmable controller is a digital computer used for automation of typically industrial electromechanical processes, such as control of machinery on factory assembly lines, amusement rides.

PLCs are used in many machines, in many industries. They are designed for multiple arrangements of digital and analog inputs and outputs, extended temperature ranges, immunity to electrical noise, and resistance to vibration and impact. The programs which control machine operation are typically uploaded and wrote by a computer with programming tools.

The PLC is an example of a "hard" real-time system since output results must be produced in response to input conditions within a limited time, otherwise unintended operation will result.

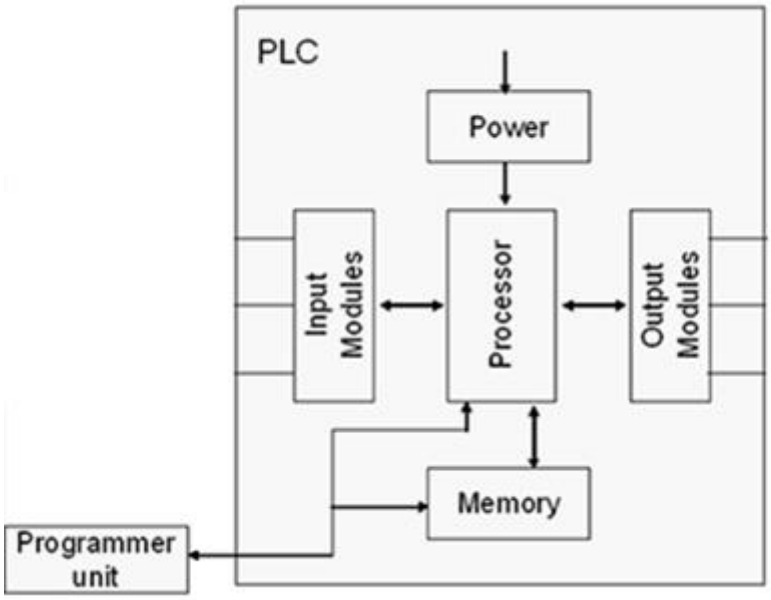

Figure 1.3. PLC block diagram.

The program is stored in the PLC either in battery backed up RAM (Read Access Memory) or some other non-volatile flash memory.

1.3.2. Centralized and Decentralized Concepts

In addition to the building automation, the industry also realized the possibility to increase the efficiency of operation by centralized and decentralized automation concepts.

The **Decentralized** concept means in detail "distributed intelligence" because many distributed controls take over a big part of the task processing

The **Centralized** concept means that the main part of the tasks goes to one or a few centralized controls and is being performed there.

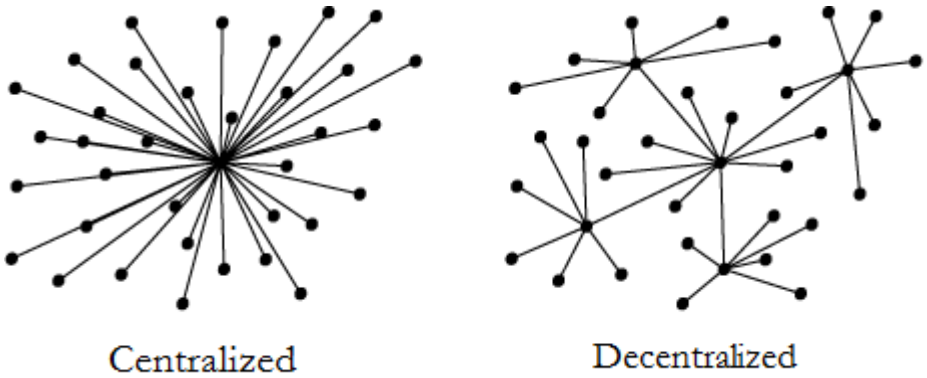

Figure 1.4. Centralized and Decentralized concepts.

1.3.3. Advantages and disadvantages

This table shows the main advantage and disadvantages of automation

Advantages :	Disadvantages :
• Replacing human operators in tedious tasks. • Replacing humans in tasks that should be done in dangerous environments. • Making task that are beyond the human capabilities such as handle too heavy loads, too large objects. • Economy improvement. Sometimes and some kinds of automation implies improves in economy of enterprises, society or most of humankind.	• Technology limits. Nowadays technology is not able to automatize all the desired tasks. • Initial costs are relative high. The automation of a new product required a huge initial investment in comparison with the unit cost of the product.

Table 1.1. Advantage and Disadvantages of Automation.

1.4. Computer Integrated Manufacturing (CIM)

CIM is the manufacturing approach of using computers to control the entire production process, this integration allows individual processes to exchange information with each other and initiate actions.

1.4.1. The Hierarchical

The pyramid of CIM consists of five levels (from 0 to 4) as shown in Figure 1.5

CIM software comprises computer programs to carry out the following functions:

- Management Information System.
- Sales, Marketing, and Finance.
- Database Management.
- Modeling and Design.
- Analysis.
- Simulation.
- Communications.
- Monitoring.
- Production Control.
- Manufacturing Area Control.

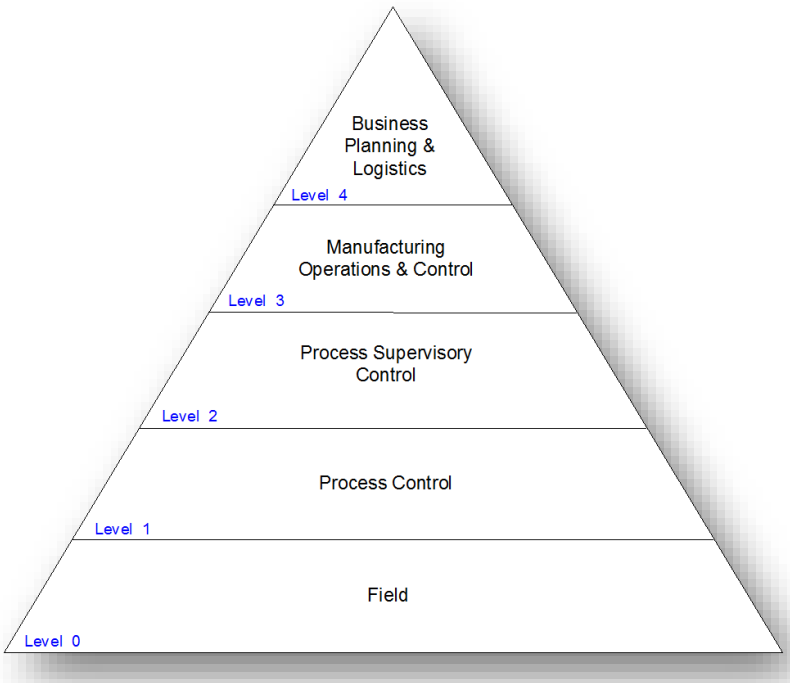

Figure 1.5. Hierarchical of CIM.

1.4.2. Advantages of CIM

The most important advantages of computer integrated manufacturing is to decrease the cost of production and maintenance through better use of materiel, machinery, personal and reduction in work in progress, so we'll save time, money and effort.

1.5. OSI Model and the TCP/IP protocol suite

The TCP/IP protocol suite (the foundation protocols for the Internet) was developed prior to the OSI model. Although, the layers in the TCP/IP protocol suite do not match exactly with those in the OSI model.

1.5.1. OSI Model (Open System Interconnection)

Established in 1947, the International Standard Organization (OSI) in order to provide a logical framework for how data communication processes should interact across networks.

As shown in Figure 1.6 there are 7 layers in the OSI model, each layer is responsible for a particular aspect of data communication, for example, one layer may be responsible for establishing connections between devices, while another layer may be responsible for error checking during transfer.

1.5.2. TCP/IP protocol suite

Also known as the internet protocol suite, the TCP/IP is the set of communications protocols used for the internet and other similar networks E.g. private network.

The transmission control protocol TCP and the internet protocol IP were the first networking protocols.

- Transmission Control Protocol (**TCP)** is a standard that defines how to establish and maintain a network conversation via which application programs can exchange data.
- Internet Protocol (**IP)** defines how computers send packets of data to each other.

The TCP/IP protocol has four layers: *Application, Transport, Network, and Physical layer.*

Figure 1.6. The seven-layer OSI model.

Figure 1.7. The four-layer TCP/IP model.

1.6. OSI Model in the Industrial Network

The Open System Interconnection (OSI) model is a standard way to structure communication software that is applicable to any network, however to implement industrial network using this model its often only three layers have been used in industrial networks, physical layer, Data link layer, application layer [1].

- Note: OSI is not a protocol, it should be considered as a model, it purpose is understanding and designing a network architecture that is flexible and robust.
- "Open" means the concepts are non-proprietary, can be used by anyone.

1.6.1. Physical Layer

This layer conveys the bit stream through the network at the electrical, optical or radio level. It provides the hardware means of sending and receiving data on a carrier network.

Such characteristics as voltage levels, timing of voltage changes, physical data rates, maximum transmission distances, physical connectors, and other similar attributes are defined by physical layer specifications.

1.6.2. Data Link Layer

Data link layer attempts to provide reliable communication over the physical layer interface, this layer breaks the outgoing data into frames and reassemble the received frames, and also create and detect frame boundaries.

1.6.3. Network Layer

This layer handles the addressing and routing of the data (sending it in the right direction to the right destination on outgoing transmissions and receiving incoming transmissions at the packet level). IP is the network layer for the Internet.

1.6.4. Transport Layer

This layer manages packetization of data, then the delivery of the packets, including checking for errors in the data once it arrives. On the Internet, Transmission Control Protocol (TCP) or User Datagram Protocol (UDP) provide these services for most applications.

1.6.4. Presentation Layer

This layer is usually part of an operating system (OS) and converts incoming and outgoing data from one presentation format to another (for example, from clear text to encrypted text and back to clear text at the other machine).

1.6.4. Session Layer

This layer sets up, coordinates and terminates conversations. It services include authentication and reconnection after an interruption. On the Internet, Transmission Control Protocol (TCP) and User Datagram Protocol (UDP) provide these services as well.

1.6.5. Application Layer

The Application layer provides network services directly to the user's application such as a web browser, email software and Windows explorer. This layer is said to be "closest to the user".

1.7. Network Address

Whether network address is logical or physical its stand to identify a node or network interface of computer or any device, and these addresses are required to send messages through the network.

1.7.1. Logical Address

One of the best known form of network addressing is the Internet Protocol (IP) which is logical address that uniquely identify all devices on the public Internet, two versions of the Internet Protocol (IP) are in use: IP Version 4 and IP Version 6.

IPv4: define an IP address as a 32-bit number.

IPv6: using 128 bits for each address in hexadecimal, established in 1995 to expand the addressing capability in the Internet.

Another type of IP addresses: Local Area Network (LAN) address also known as private address.

Examples: 105.103.58.246 (IPv4), 2001:db8:0:1234:0:567:8:1 (IPv6), 192.168.1.20 (LAN).

Within an IP network, we can use subnet mask to extend our network addresses. From the example LAN IP address, we use 255.255.255.0 as a subnet mask.

Therefore, we can assign address from 192.168.1.0 to 192.168.1.255, whereas the last address 192.168.1.255 has a special function, namely broadcast function, so we can connect 256 network devices to this network, and they will have IP addresses from 192.168.1.0 to 192.168.1.255.

With an IPv4 IP address there are five classes:

- Class **A**: from 0.0.0.0 to 127.255.255.255 - Class **B**: from 128.0.0.0 to 191.255.255.255
- Class **C**: from 192.0.0.0 to 223.255.255.255 - Class **D**: from 224.0.0.0 to 239.255.255.255
- Class **E**: from 240.0.0.0 to 247.255.255.255

1.7.2. Physical Address

Another popular form of address, known as well as Media Access Control (MAC) address. MAC addresses are six bytes (48 bits) that manufacturers of network adapters burn into their products to uniquely identify them. Example: 68-A3-C4-B3-59-83 (six groups of two hexadecimal digits).

1.8. Industrial Networks

Several companies race to provide the best industrial networking solution, a major concern in the industrial networks is not only the cost of equipment's but also the training of engineers to design and diagnose the network, security and stability is another major concern when installing networking system. With time the number of available network products is increasing very quickly.

1.8.1. Topology

Network topology refers to layout of a network and how different nodes in a network are connected to each other and how they communicate, *Star, Ring, Bus and Mesh,* are the most widely used topologies.

- **Ring Topology**: all of the nodes are connected in a closed loop. Messages travel around the ring, with each node reading those messages addressed to it.
- **Star Topology:** In a star network devices are connected to a central computer, called a hub. Nodes communicate across the network by passing data through the hub.
- **Bus Topology**: In networking a bus is the central cable -- the main wire -- that connects all devices, it is also called the backbone.
- **Mesh Topology:** In a mesh network, devices are connected with many redundant interconnections between network nodes.

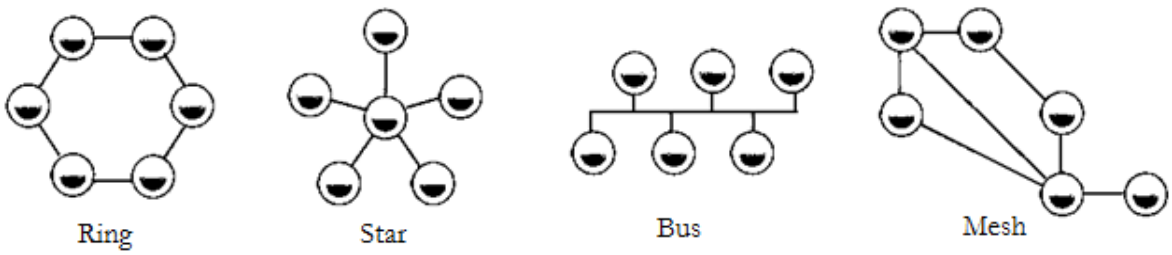

Figure 1.8. Different types of network topologies.

1.8.2. Network Interconnection Devices

An interconnection device is any device that can enable computers similar devices to exchange data on a network, and usually this particular devices are required in a modern network, the main categories of interconnection device used in computer networks are listed below:

- **Repeater:** A repeater is a device that gets a signal and is then retransmitted at a higher level or power to another area. A repeater can be used to extend the distance of a wireless signal as well.
- **Hubs:** A network hub is used to connect multiple Ethernet devices together, making them act as a single network.
- **Switches:** The switch within a network, filters and forwards packets of data across the network, unlike the standard hub which simply replicates what it receives on one port to all the other ports, a switching hub keeps a record of the MAC addresses of the devices attached to it.
- **Router:** A Router is a physical device that joins multiple wired or wireless networks together. The Router operates at the network layer of the OSI Model.

1.9. Conclusion

Nowadays, the industrial world is using more networking standards communication protocols which lead this world to big changes in the way that industrial systems operate, we name some benefits in the use of industrial networks:

- We seek low-cost, low-maintenance solutions when retrofitting or creating new systems.
- We will see more intelligence distributed among the devices on the network.
- Hard wiring has been reduced, and diagnostics increased.

The choice of communication technology is varied, extensive and evolving. For new factories or plants, users need to assess which technology is best suited to their particular application.

Currently, two main technologies are battling it out in the industrial communication space. First, there are fieldbus technologies, which are well established and have a large installed base in existing factories.

Second, there is Ethernet, which can either be adopted in the standard office TCP/IP flavor or from a host of industrial variants. This technology, which was adopted in industrial environments later than fieldbus, offers faster transmission speeds and can be easily connected to a larger organizational networking structure.

The other option, which to date is yet to be widely adopted in industry is wireless communication, it offers flexibility and can reduce costs through less cabling.

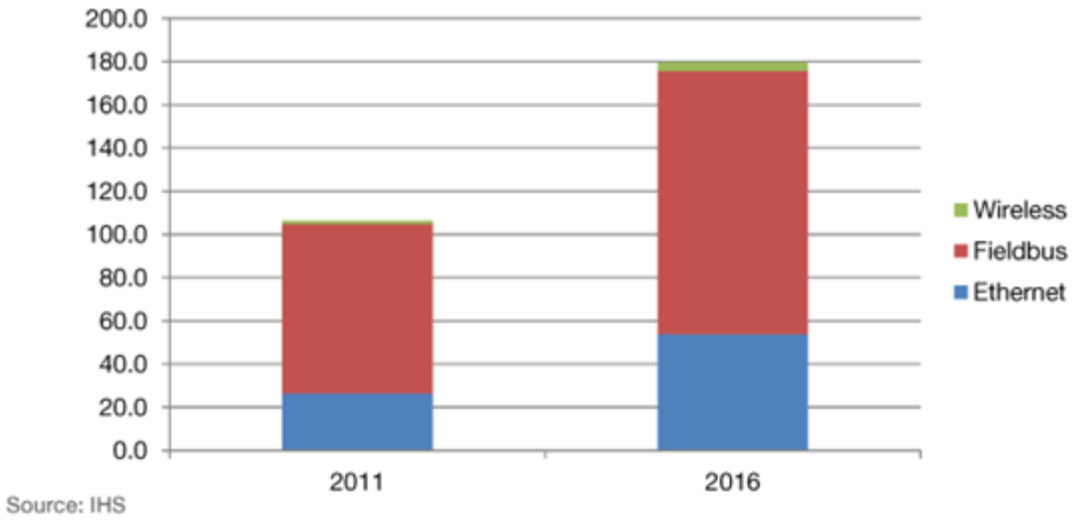

Figure 1.9. Worldwide growth in industrial networking by technology 2011-2016 by millions of node connection [2].

Chapter 02

THE INDUSTRIAL ETHERNET

2.1. Introduction

Industrial Ethernet has become big business in the last 10 years and represents a sea change in the way that industrial systems operate, the using of Ethernet on the factory floor or in transportation systems is a relatively new concept but the move to IP based systems is growing at an exponential rate.

Ethernet: A system for connecting a number of devices usually computers to form a local area network (LAN), with protocols to control the passing of information and to avoid simultaneous transmission by two or more systems.

2.2. The Industrial Ethernet (IE)

Industrial Ethernet is a configuration technology that enables data to be transferred interference-free in an industrial environment.

These are some of the industrial Ethernet technologies: *Profinet, Modbus TCP/IP, PowerLink, and EtherCat.*

2.2.1. The PROFINET (Process Field Net)

PROFINET is a standard for Industrial Networks based on Industrial Ethernet according to IEEE (Institute of Electrical and Electronics Engineers), i.e. you can exchange the process data with your machines like before but instead of using fieldbus system such as Profibus, you use the Ethernet as a communication mechanism [10].

The network was developed by Siemens and the Profibus User Organization (PI). PROFINET is used for factory and process automation, for safety applications, and for the entire range of drive technology right up to clock-synchronized motion control. PROFINET is used worldwide but is especially strong in central Europe.

The concept of the PROFINET satisfies all the requirements for the industrial automation technology, we can use PROFINET for factory and process automations that require response time under 100 milliseconds. Other applications, like drive technology applications or clock-synchronized Motion control, can be served with response time up to less than 1 millisecond. For the purpose running safety applications [10].

2.2.2. PROFINET Function Classes

In PROFINET, we can distinguish two function classes that are independent from each other, the PROFINET IO and the PROFINET CBA (Component Based Automation). PROFINET IO concerns about the distributed I/O (Input/Output) and PROFINET CBA concerns about distributed automation.

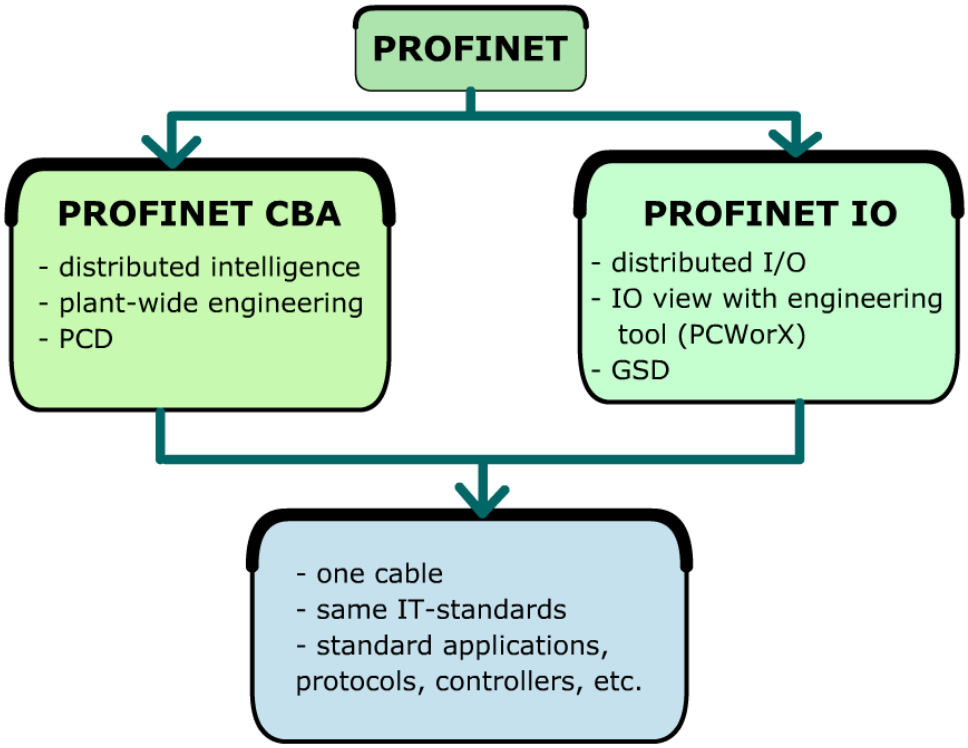

Figure 2.1. PROFINET Function classes.

2.2.3. PROFINET IO

The distributed field devices are connected through the PROFINET IO. If you are familiar with PROFIBUS, you will find the similarity between these two systems in this point of view, namely the process data from the field devices will be transmitted into the control system periodically.

PROFINET IO uses three different communication channels to exchange data with the control systems and other devices.

- The standard TCP/IP channel is used for parameterization, configuration and acyclic read/write operation, the response time is about 100 millisecond.
- The RT channel (Real Time) is used for standard cyclic data transfer and alarms, also for optimized data exchange performance. The read-write operation for industrial automation requires mostly the high-speed data transfer, the response time is about 10 millisecond, while standard TCP/IP or UDP/IP cannot satisfy this requirement.
- The third channel, IRT (Isochronous Real Time) is the high-speed channel used for Motion Control applications, which needs to be satisfied immediately. The IRT can do this with the response time less than 1 millisecond [11].

▪ Note**:** The technical characteristics of the field I/O devices are described by the so-called GSD file (General Station Description) which based on XML (eXtensible Markup Language).

2.2.4. PROFINET CBA

This concept is designed for the distributed industrial automation applications. The PROFINET CBA is built on the standard DCOM (Distributed Component Object Model) and RPC (Remote Procedure Call) technologies. DCOM is an object oriented mechanism that structures how a Client can locate, request and receive data from a Server. DCOM is originally developed by Microsoft [13].

The DCOM objects, which are cut off for the PROFINET CBA are called technological components, these components act independently and coordinate their activities among themselves autonomously. The encapsulated technological components are called PROFINET components, which are described by PCD (PROFINET Component Description), we can imagine them as a black box with the interfaces to the outside.

They communicate with each other over these uniformly defined interfaces. In this way, we can connect them arbitrarily.

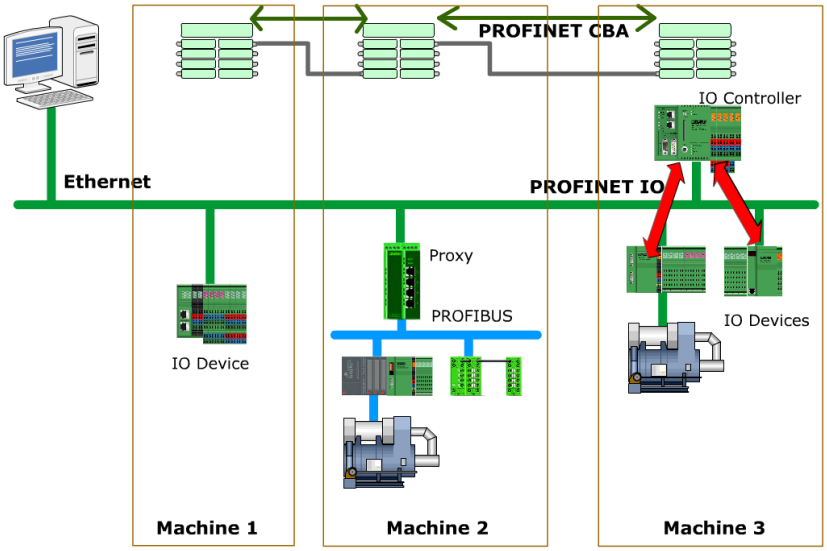

Figure 2.2. PROFINET IO and PROFINET CBA.

2.2.5. PROFINET Protocols

Every module within a PROFINET network has three addresses:

- MAC address.
- IP address.
- Device name, a logical name for the module within the total configuration.

Because PROFINET uses TCP/IP a MAC and IP address are used, a MAC address changes if the device is replaced. An IP address is a form of dynamic addressing, and because there was a need for a fixed address a device name is used.

For allocation of the IP address, subnet mask and default gateway two protocols are defined:

- DCP: Discovery and Configuration Protocol.
- DHCP: Dynamic Host Configuration Protocol.

2.2.6. PROFINET Cables

Basically we have two cable types, cables with copper and cables with fiber optic, depending on the data transmission requirements and the environment in which the cables are used.

The network components for the use in the industrial automation must be designed to bear up against the extreme conditions in the production area. The extreme conditions are, e.g. dust, EMC (Electromagnetic Compatibility), temperature, moisture, vibration, etc.

- **Twisted Pair cables (from copper)**

Nowadays, we use a so-called balanced cable, also called symmetrical cable too. Symmetry because the potential difference to the reference ground is 0 V (Volt) in an ideal case. To transmit a signal, two wires are twisted together as a pair of signal, and for a full duplex we need four wires. Therefore, an industrial network cable has at least 4 wires (quad cable).The maximum of a cable segment length is 100 meters [4].

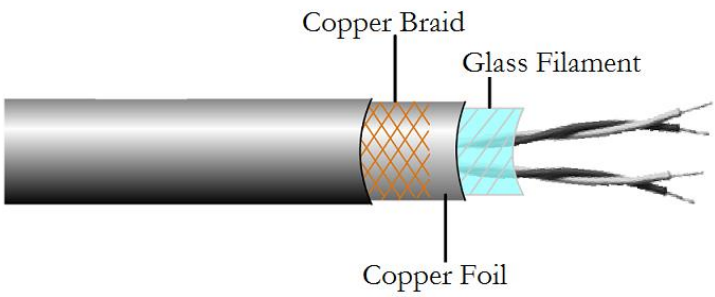

Figure 2.3. Twisted Pair cable components.

- **Fiber Optic cables**

A glass fiber optic cable comprises a core and a shield. The core is a highly sterile, extremely thin silica or quartz glass thread which shielded by glass with low optical density. The light pulses will be reflected totally and forwarded along the core. In order to enable sending the data, the data signals will be converted into the light pulses by using LEDs or laser diodes.

For the Fast Ethernet (100BASE-FX), we use two fiber optic cables. The optical interfaces conform to the specifications of International Electrotechnical Commission (IEC) in each type, whether is multimode or single mode. For multimode, the maximum segment length is 2 kilometers, and for single mode, 14 kilometers [5].

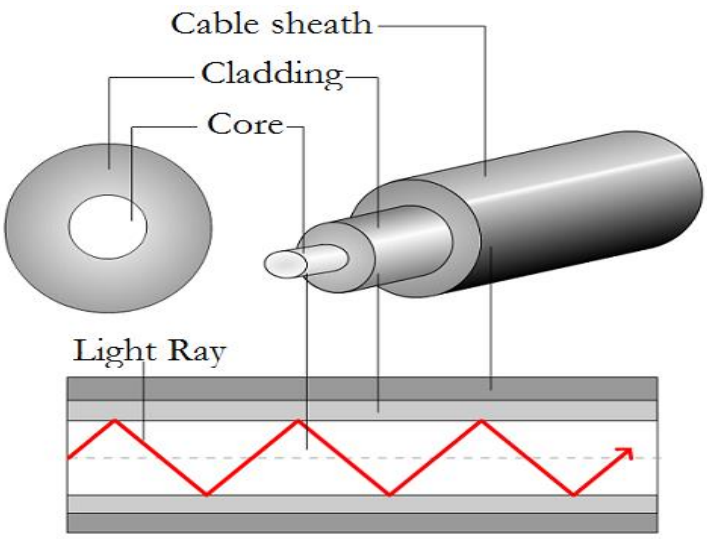

Figure 2.4. Fiber Optic cable components.

- **Optical cables compared to Copper-based cables**

There are many advantages of optical cables compared to copper based cables, we will take a look at the following list:

- Optical cables are insensitive to electromagnetic influences.
- Large bandwidth.
- Low cable weight per meter.
- No electromagnetic radiation.
- Can be used for a maximum distance.
- Resistance to tapping.

The disadvantages compared to the copper-based cables are:

- The higher price, and the assembly of the connection is more complicated.

2.2.7. PROFINET Connectors

- There are two connector types for copper based cables using in PROFINET:
  - RJ45.
  - M12.

For installation inside of a control cabinet, we can use the RJ45 connector with IP20 variant that is compliant with the connectors using in the office area. For installation outside of the control cabinet,

the connectors must satisfy the requirements for the extreme conditions in the installation area, so we use the RJ45 connector with IP65 or IP67 variant, or M12.

Figure 2.5. Types of copper based cables connectors.

- Connectors for fiber optic cables :

For connecting fiber optic cables in PROFINET, we use SC-RJ connector technology.

This connector is suitable for both multimode and single mode fibers. In the near future, the M12 connectors will be used too.

Figure 2.6. Types of fiber optic cable connectors.

2.2.8. Objectives of PROFINET

The most objectives of PROFINET are:

- Industrial networking, based on Industrial Ethernet (open Ethernet standard).

- Compatibility of Industrial Ethernet and standard Ethernet components.
- High robustness due to Industrial Ethernet devices. Industrial Ethernet devices are suited to the industrial environment (temperature, noise immunity, etc.).
- Use of IT (Information Technology) standards such as TCP/IP, http.
- Real time capability.
- Seamless integration of other fieldbus systems.

2.3. Different types of Programming language

PLC programs are typically written in a special application on a personal computer (programmer unit), then downloaded by a direct connection cable or over a network to the PLC, the highly used programming languages are:

- Ladder Diagram (LAD).
- Instruction List (STL).
- Structured Text (SCL).
- Function Block Diagram (FBD).
- Sequential Function Chart (SFC) or (GRAPH).

We focus on the simplest programming language (LAD) to program our PLC.

2.3.1. Ladder Diagram (LAD)

Ladder is one of the simplest methods used to program a PLC, it is a graphical programming language evolved from electrical relay circuit, and each program statement is a line called the rung.

With inputs to the left and the output to the right, execution starts from the top rung down to the last rung, the output devices of rung is energized if electric power can conceptually flow from the left side of the rung to the right side, input devices are assumed to block the flow of power if they are not activated.

These instruction categories also include:

- Ladder relay.
- Timing special.
- Data transfer.
- Function (sequencers).

- Counting data manipulation.
- Network communication.
- Program/flow control.
- Arithmetic.

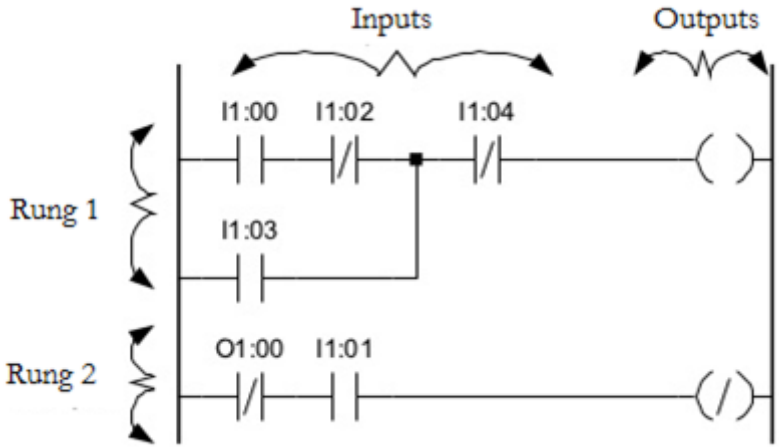

Figure 2.7. Ladder diagram.

A typical naming convention is to identify inputs with the letter "I" and outputs with letter "O" or "Q", followed by a first digit number that identifies the slot number and a second digit number that identifies the position of the input or output in the slot.

For example: - I1:00 refers to the first input of slot 1.

- O2:00 refers to the first output of slot 2.

- **Types of contact inputs :**

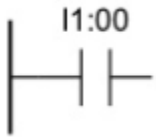

Examine if Closed Contact (XIC)

If the input devices is ON or closed, then the corresponding in data memory is set to true thus allowing the energy to flow from left to right side.

Examine if Open Contact (XIO)

If the input devices is OFF or Open, then the corresponding in data memory is set to true thus allowing the energy to flow from left to right side.

- **Types of relay outputs :**

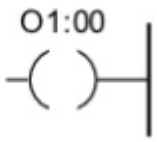

Output Energize (OTE)

If the condition of left link of the OTE is ON then the corresponding in output data memory is set, the device wired to this output is also energized.

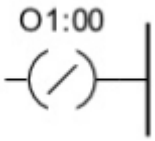

Negative Output Energize (NOE)

If the condition of left link of the NOE is OFF then the corresponding in output data memory is set, the device wired to this output is also energized.

2.4. Simulation Concept

In order to properly understand the operation of a PLC, it is necessary to spend considerable simulation time programming, testing, and debugging PLC programs. PLC systems are inherently expensive, and down time is often very costly. In addition, if a PLC is programmed incorrectly it can result in lost productivity and dangerous conditions.

2.5. SCADA (Supervisory Control and Data Acquisition)

SCADA is a system for remote monitoring and control that operates with coded signals over communication channels (using typically one communication channel per remote station).

The control system may be combined with a data acquisition system by adding the use of coded signals over communication channels to acquire information about the status of the remote equipment for display or for recording functions.

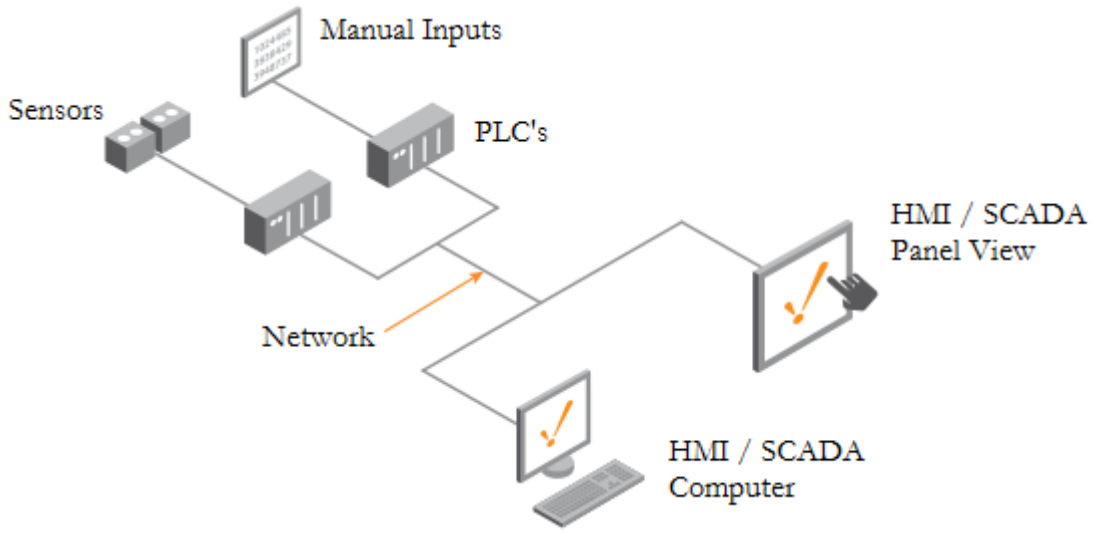

Figure 2.8. SCADA (Supervisory Control and Data Acquisition) architecture.

2.5.1. Human Machine Interface (HMI)

HMI is a certain device that are capable of handling human machine interactions. The interface consists of hardware and software that presents information to an operator or user about the state of an application process, and to accept and implement the operators control instructions.

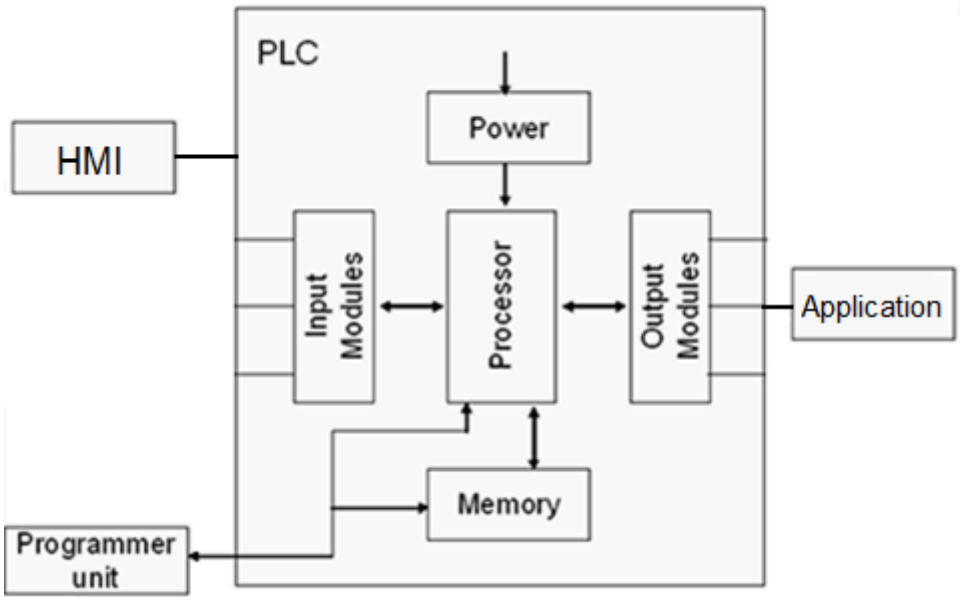

Figure 2.9. PLC Block diagram with Human Machine Interface.

2.5.2. Security Issues

SCADA systems that tie together decentralized facilities such as power, oil, gas pipelines, water distribution and wastewater collection systems were designed to be open, robust, and easily operated and repaired, but not necessarily secure. The move from proprietary technologies to more standardized and open solutions together with the increased number of connections between SCADA systems, office networks and the Internet has made them more vulnerable to types of network attacks that are relatively common in computer security, therefore security researchers are concerned about:

- The belief that SCADA networks are secure because they are physically secured.
- The belief that SCADA networks are secure because they are disconnected from the Internet.

2.6. Introduction to Totally Integrated Automation (Tia) Portal software

The Totally Integrated Automation Portal (TIA Portal), is advanced software technology packaged in an intuitive user interface. Whether it involves programming a controller, developing an HMI screen or parameterizing a drive, TIA Portal helps new and experienced users to work as intuitively and as effectively as possible, it is one software framework for all controllers, HMIs, and drives.

Figure 2.10. TIA Portal software, the portal view.

- **Portal View:**
  1. Portals for the different tasks.
  2. Tasks for the selected portal.
  3. Selection panel for the selected action.
  4. Changes to the project view.

Figure 2.11. TIA Portal software, the project view.

- **Project View:**

1. Menus and toolbar.
2. Project navigator. 3. Work area.
4. Task cards. 5. Inspector window.
6. Changes to the Portal view. 7. Editor bar.

2.6.1. SIMATIC Step 7

SIMATIC STEP 7 is the world's best known and most widely used programming software in industrial automation. It has efficient engineering integrated inside for proven and new SIMATIC controllers.

2.6.2. SIMATIC WinCC flexible

Consistent engineering for the entire HMI bandwidth from a basic panel up to a SCADA system for every HMI application. All of these devices can now be programmed and simulated with one single software: SIMATIC WinCC flexible inside TIA Portal software.

2.7. Motors Control with Status indicator via PROFINET

Motors are one of the essential manufacturing equipment's, therefore in this application we will ask a motor to Start and Stop via PROFINET using Siemens S7-300 (PLC) and Siemens Panel (HMI), also we will add status indicator so we can tell whether the motor is ON or OFF.

2.7.1. Siemens S7-300 (CPU 314C-2 PN/DP)-PLC-

SIMATIC S7-300, CPU 314C-2PN/DP compact CPU with 192 Kbyte working memory, 24 DI (Digital input) / 16 DO (Digital Output), four AI (Analog Input), and two AO (Analog Output).

It has one interface MPI (Message Passing Interface) / Profibus 12MBIT/S, and two Ethernet Interfaces (PROFINET), with two port switch RJ45 connectors, integrated 24V DC power supply, and micro memory card required.

1. Status and error displays.
2. SIMATIC Micro Memory Card.
3. Mode selector.
4. Twisted pair cable for additional PROFINET devices.
5. Twisted pair cable for programming device connection.
6. Programming device with STEP 7 software PC (Personal Computer).
7. Mounting rail. 8. Power supply ON/OFF.

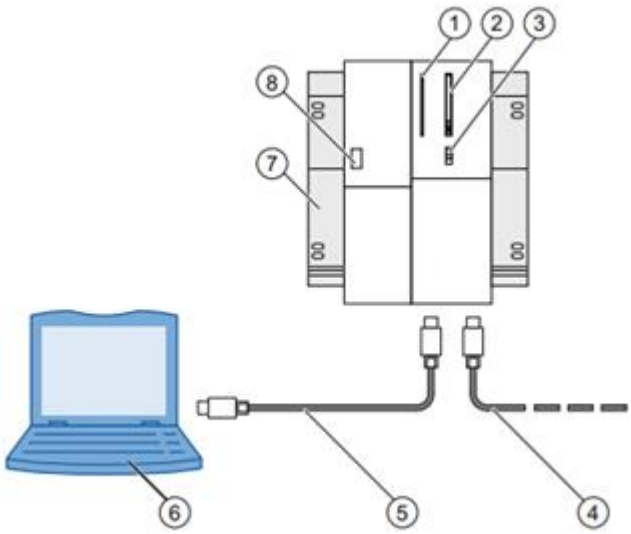

Figure 2.12. Siemens S7-300 (CPU 314C-2 PN/DP) view.

2.7.2. Siemens MP (Multi Panel) 177 6” (inch) Touch

The SIMATIC HMI basic panels provide touch-screen devices for basic operator control and monitoring tasks.

Description**:**

- 6” (inch) display with touch screen.
- 320 x 240 pixel, 64K colors.
- Slot for Memory Card.
- 1 x USB port.
- 1 x PROFINET interface and 1 x Profibus.

Figure 2.13. Siemens MP (Multi Panel) 177 6” (inch) Touch view.

2.7.3. Network Architecture

Ethernet is the most widely used network topology, we can choose between bus and star topologies, as well as coax, twisted-pair, or fiber optic cabling.

The bus is the simplest (and the traditional) topology, all workstations are connected in succession on a single cable, all transmissions go to all the connected workstations.

In a star topology, all attached workstations are wired directly to a central hub that establishes, maintains, and breaks connections between them.

In order to turn ON or OFF any motor the simplest case is putting a relay in between the motor and its source power, often the motors have a protective overload relay or temperature sensing relay included in the controller and fuses or circuit breakers for over current protection.

In our application we use PROFINET IO type with bus topology to command the motor (Direct Start mode), the architecture is shown in Figure 2.14 and in case the network is interrupted we add inputs (push buttons) to keep commanding the motor.

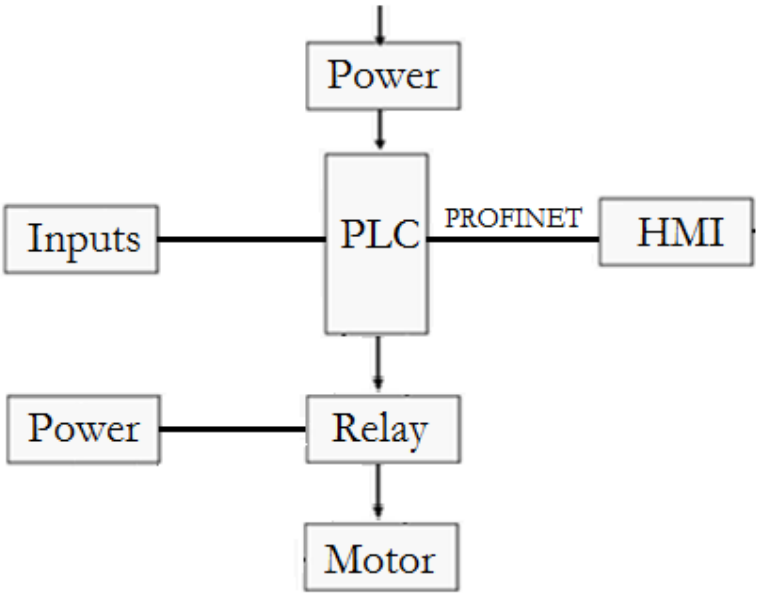

Figure 2.14. Motor Control via PROFINET network, bus Topology.

2.7.4. The Communication between HMI and PLC

Since we are using TCP/IP protocol means we have four layers that will communicate, all horizontal communication also requires vertical communication down the stack on one machine, and then back up the stack on the other, and this process is illustrated in Figure 2.15.

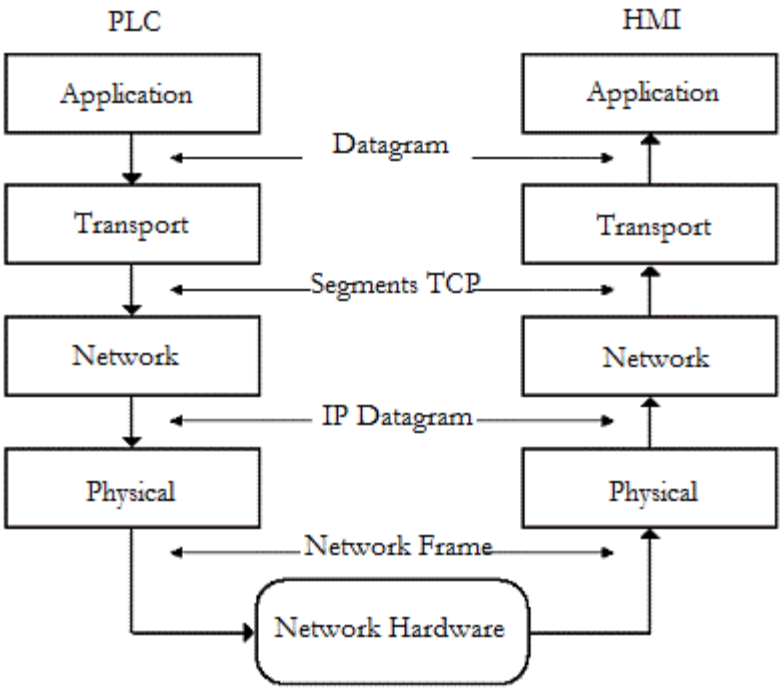

Figure 2.15. Sending and Receiving information using TCP/IP protocol.

The signification of each field between layers is given below:

- **Datagram:** The data to be transmitted in datagram, either an entire higher-layer message or a fragment of one.
- **Segments TCP:** When fragmentation of a message occurs, this field specifies the offset, or position, in the overall message where the data in this fragment goes. It is specified in units of 8 bytes (64 bits). The first fragment has an offset of 0.
- **IP Datagram**: Data transmitted over an internet using IP is carried in messages called IP datagrams, IP uses a specific format for its datagrams, and we are of course looking here at IP version 4.
- **Network Frame**: it's a digital data transmission unit, a frame typically includes frame synchronization features consisting of a sequence of bits or symbols that indicate to the receiver the beginning and end of the payload data within the stream of symbols or bits it receives.
- **Network Hardware**: or network equipment's which are required for communication and interaction between devices, for example a Switch.

2.7.5. Getting Started With Tia portal and Devices Configuration

Working with Tia portal is easy! See how quickly we can get started with creating a project allows to power ON and OFF motor with status indicator.

In the Start portal, click the "Create new project" task then enter a project name and click "Create" button.

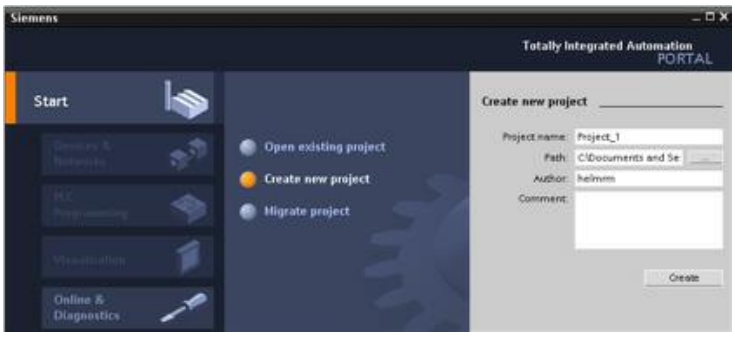

Figure 2.16. TIA portal software, creating project.

After creating the project, select the Devices & Networks portal, then click the "Add new device" task.

Figure 2.17. TIA portal software, adding new device.

Select the CPU to add to the project:

1. in the "Add new device" dialog, click the “SIMATIC PLC” button, we choose S7-300.
2. Select CPU from the list we choose CPU 314C-2 PN/DP.
3. To add the selected CPU to the project, click the “Add” button.
4. Click “Add new device” again and select HMI, we choose MP 177 6” Touch.

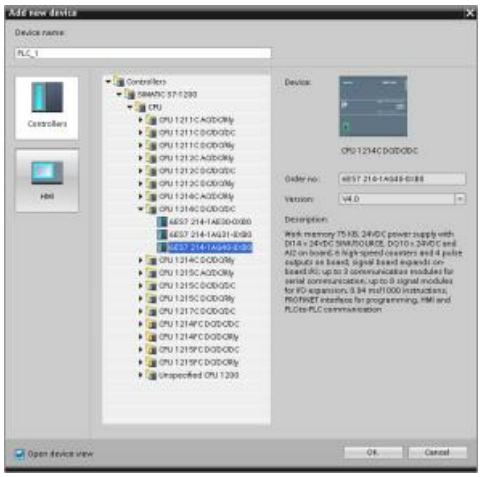

Figure 2.18. TIA portal software, selecting device.

The device view displays the CPU that we added.

1. In the Program blocks click “Add new”.
2. Select ladder language LAD and click “OK”.

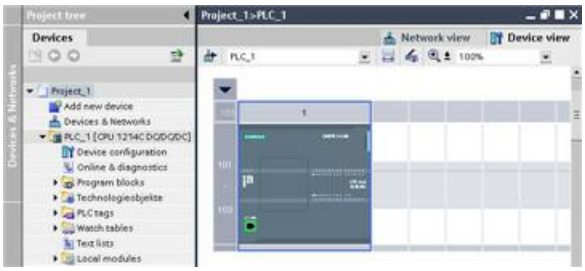

Figure 2.19. TIA portal software, devices view.

2.7.6. PLC programming

In order to create a network click the "Normally open contact" button on the "Favorites" to add a contact to the network, or click the "Output coil" button to insert a coil.

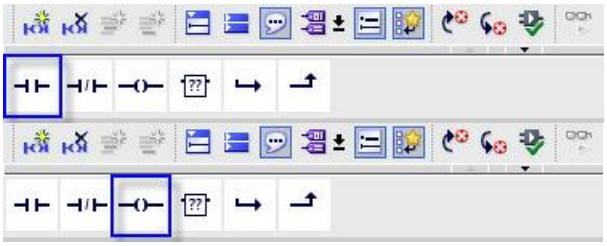

Figure 2.20. TIA portal software, Ladder programming tools.

Drag the double-headed arrow to a connection point (the green square on the rung) between the two contacts on the first rung.

Double-click above the contact or the coil to enter the PLC tags for the addresses of contacts and coils.

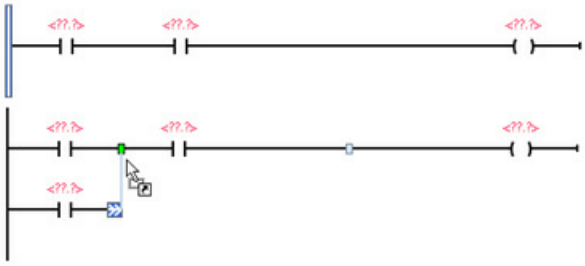

Figure 2.21. TIA portal software, Ladder programming process.

Using the tags table, we can quickly enter the PLC tags for the addresses of the contacts and coils.

	Name	Data type	Address
1	Blink	Bool	%Q136.1
2	Motor	Bool	%Q136.0
3	Start	Bool	%I136.0
4	Start Panel	Bool	%M150.0
5	Stop	Bool	%I136.1
6	Stop Panel	Bool	%M160.1
7	Memory blink bit	Bool	%M0.7

Figure 2.22. The tags table.

As to Start and Stop the motor via PROFINET or PLC inputs which could be push buttons, we complete the process to create two networks as shown below.

The first network stands for commanding the motor (Start/Stop).

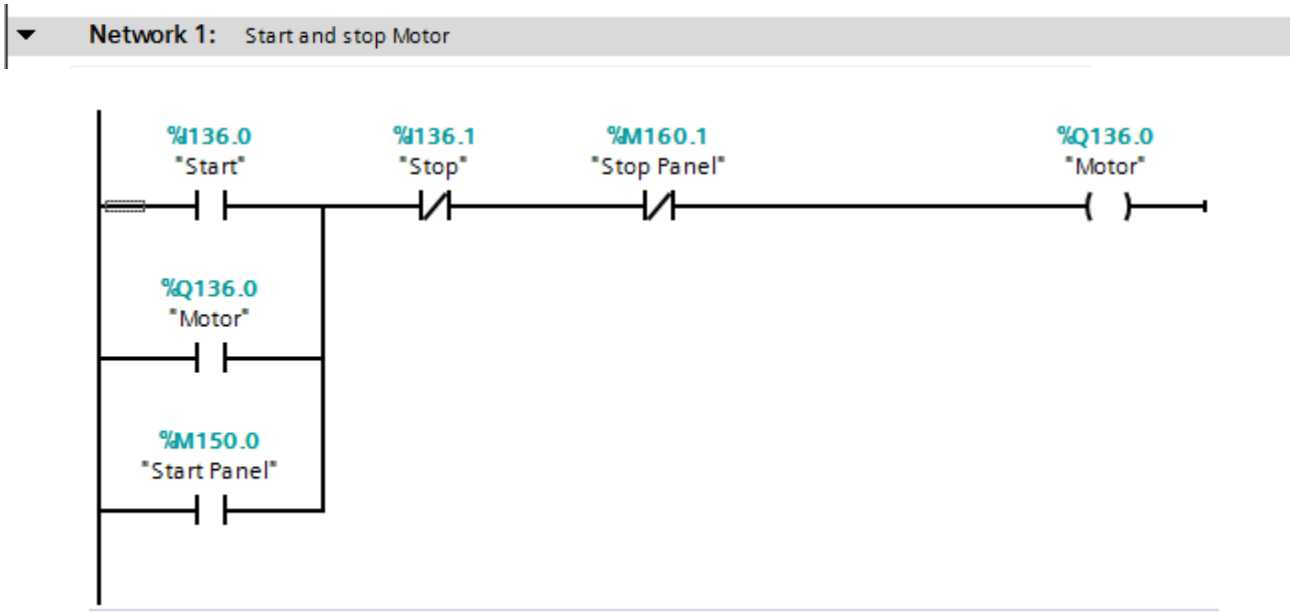

Figure 2.23. Ladder program, Start and Stop commands.

The second network stands for blinking lamp to indicate the status of the motor.

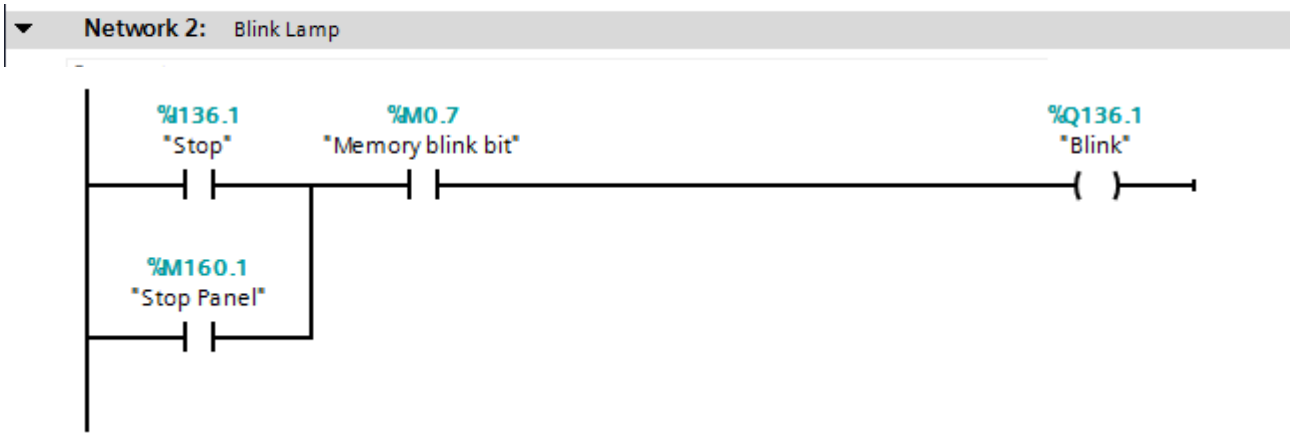

Figure 2.24. Ladder program, blinking lamp.

2.7.7. HMI Screen programming

The TIA Portal provides an HMI wizard that helps to configure all of the screens and structure for our HMI device.

A standard set of libraries for inserting basic shapes, interactive elements, and even standard graphics.

To add an element, simply drag and drop one of the elements onto the screen.

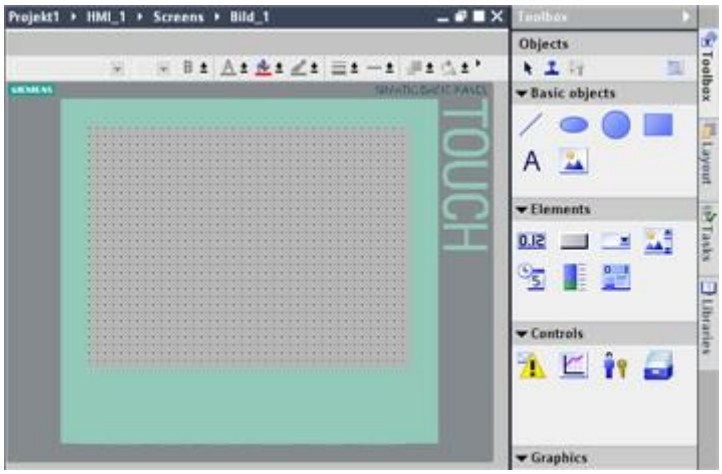

Figure 2.25. TIA portal software, HMI programming tools.

After we create the element on the screen, we use the properties of the element to assign a PLC tag to the element, we click the selector button by the tag field to display the PLC tags of the CPU and so on we complete programming the HMI screen with the same process.

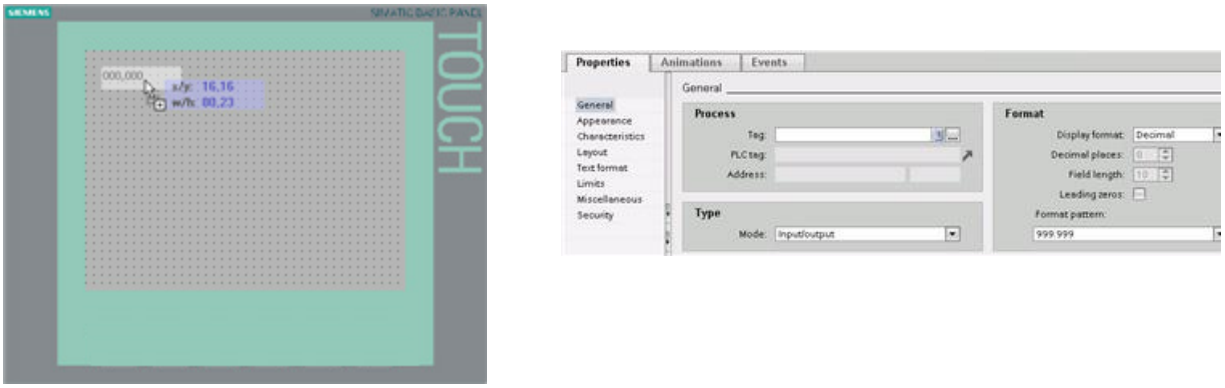

Figure 2.26. TIA portal software, HMI programming process.

The final HMI screen is shown in Figure 2.27.

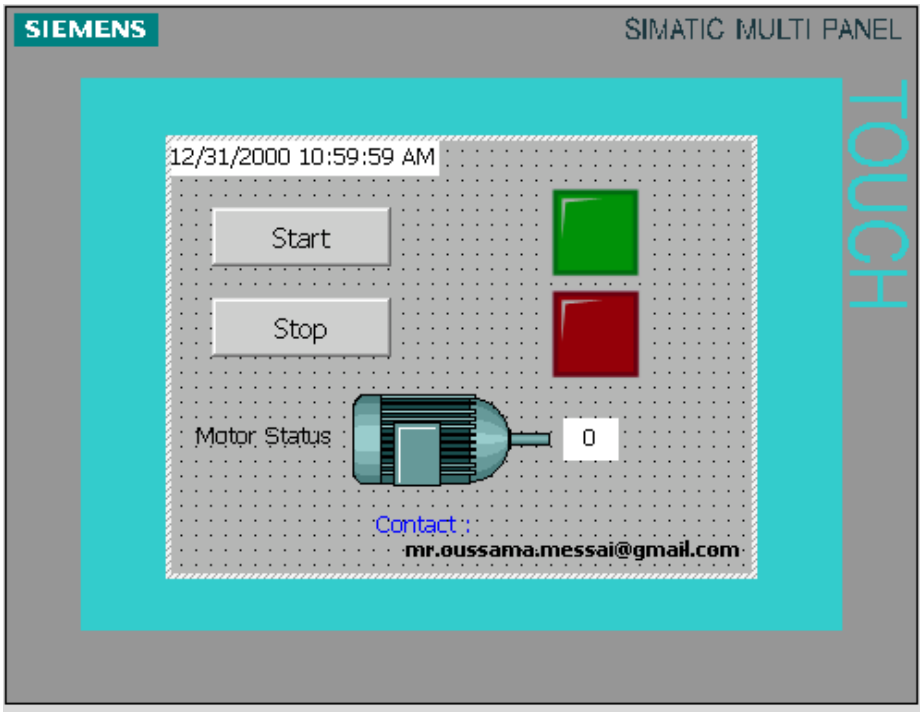

Figure 2.27. The final HMI screen.

From proprieties of each device we define the IP addresses as below:

- PLC IP address: 192.168.0.1
- HMI IP address: 192.168.0.2
- The subnet mask must be the same in our network which is 255.255.255.0.

After selecting the IP addresses of both HMI and PLC we create PROFINET network:

- To create a PROFINET network, drag a line from the green box (Ethernet port) on one device to the green box on the other device.
- An Ethernet switch is not required for a direct connection between a programming device or HMI and CPU. An Ethernet switch is required for a network with more than two CPUs or HMI devices.

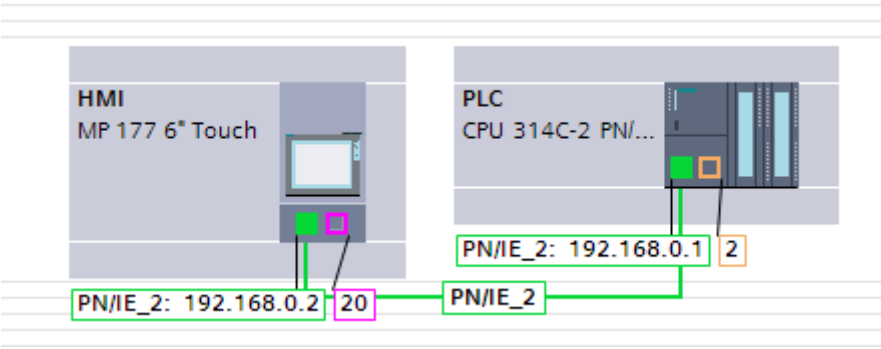

Figure 2.28. Network view, TIA portal software.

2.8. Conclusion

Ethernet is quickly becoming a well-known and used technology on the factory floor. It offers cost, data volume, and transmission speed improvements over its fieldbus predecessors in industrial applications.

However, these industrial applications still cost a lot of money since it needs some extra industrial equipment's.

Throughout this chapter we gave a physical description of material and we have developed a commanding motor system via Industrial Ethernet using TCP/IP protocol, we used Siemens software and hardware, which are expensive, in the other hand they are able to effectively deal with harsh environments, and they are designed to fulfill unique industrial needs.

Specifically in those kind of industrial applications we provide a modest solution could solve this issue about the cost in the next chapter.

Chapter 03

THE INDUSTRIAL ETHERNET WITH MICROCONTROLLERS

3.1. Introduction

Most industrial Ethernet automated systems do not require compliance with a PLC cycle time lower than a few milliseconds. For these applications, the industrial Ethernet protocol can be cost-effectively implemented in software on a microcontroller with an integrated standard Ethernet MAC peripheral.

3.2. The Microcontrollers

A microcontroller (or MCU, short for microcontroller unit) is a small computer on a single integrated circuit containing a processor core (CPU central processing unit), memory (read access memory RAM and read only memory ROM), timer, and input/output ports, also the microcontroller needs an oscillatory circuit.

We can find microcontrollers in all kinds of electronic devices these days. Any device that measures, stores, controls, calculates, or displays information must have a microcontroller chip inside.

Figure **3.1** below present the essential components of any MCU.

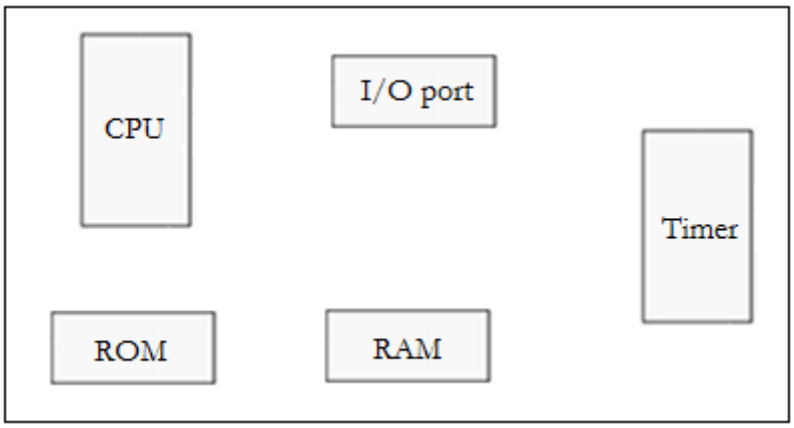

Figure 3.1. The microcontroller basic components.

- Central processing unit (CPU): CPU is the brain of a microcontroller .CPU is responsible for fetching the instruction, decodes it, and then finally executed.

- Memory: The function of memory in a microcontroller is same as microprocessor. It is used to store data and program. A microcontroller usually has a certain amount of RAM and ROM (EEPROM, EPROM, etc.) or flash memories for storing program source codes.

- Timer: This is the one of the useful function of a microcontroller. A microcontroller may have more than one timer, it provides all timing and counting functions inside the microcontroller.

- Input/Output ports: input/output ports are mainly used to drive/interface various devices.

3.2.1. ATmega328P

Building on decades of experience and industry leadership, Atmel Company offers proven microcontroller architectures that are optimized for low power, high-speed connectivity.

ATmega328P is an 8-bit microcontroller that has 32K of flash memory, 1K of EEPROM, it has 28 pins, 14 digital I/O pins, of which 6 can be used as PWM (Pulse Width Modulation) pins, and another 6 analog input pins only.

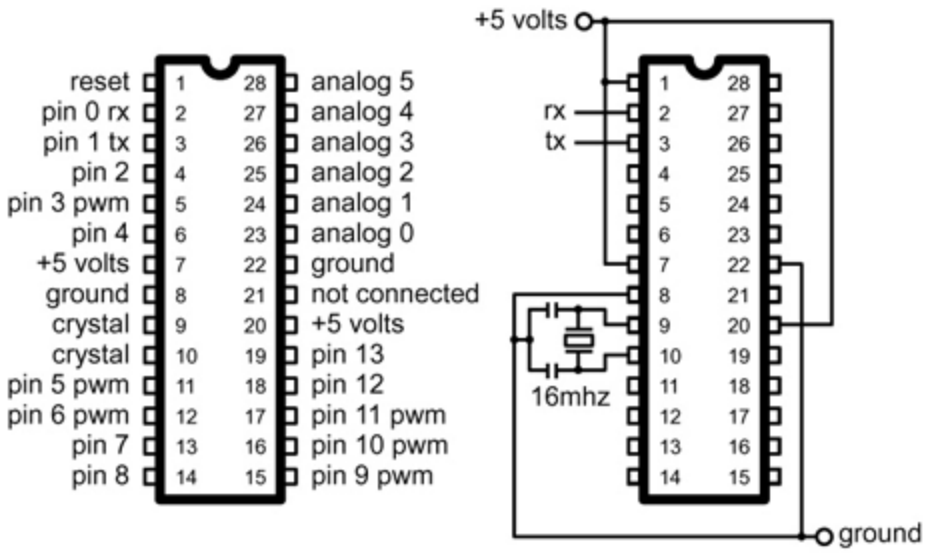

Figure 3.2. ATmega328P microcontroller.

The MCU core combines a rich instruction set with 32 general purpose working registers, all the 32 registers are directly connected to the Arithmetic Logic Unit (ALU).

Hex Code is what is stored in the Flash Program Memory. When the program runs, the hex code is accessed by the Program Counter, it loads the next instruction into a special Instruction Register. The operands of the instruction are fed into the ALU, while the instruction itself is decoded and then executed by the ALU.

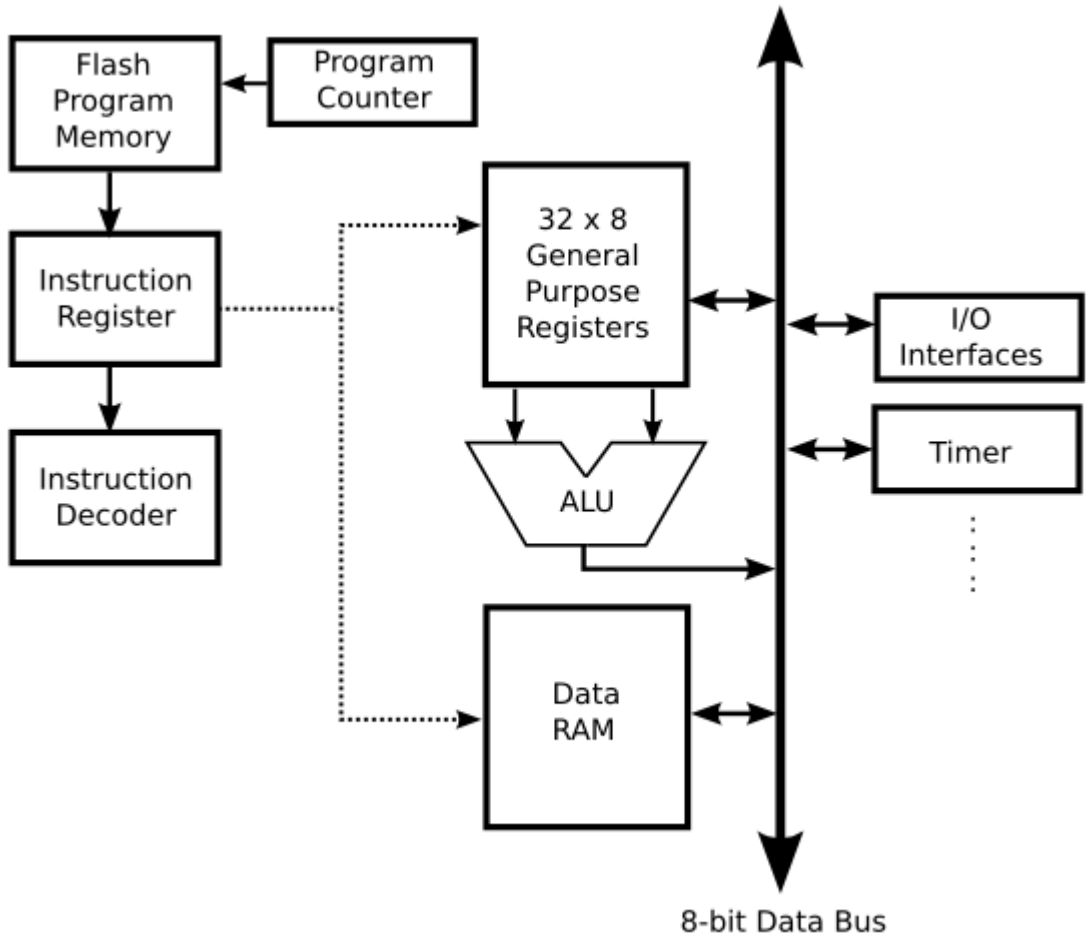

Figure 3.3. MCU Architecture of ATmega32.

3.2.2. Arduino Toolkit

The Arduino Toolkit is a software company, project, and user community that designs and manufactures computer open-source hardware, open-source software, and microcontroller-based kits for building digital devices and interactive objects that can sense and control physical devices.

3.2.3. Arduino Uno

The Arduino Uno is a microcontroller board based on the ATmega328P it has 14 digital input/output pins (of which 6 can be used as PWM outputs), 6 analog inputs, a 16 MHz ceramic resonator, a USB connection, a power jack, in-circuit serial programming (ICSP) header, and a reset button. It contains everything needed to support the microcontroller, simply connect it to a computer with a USB cable or power it with an AC-to-DC adapter or battery to get started.

Figure 3.4. Arduino Uno Board components (Photograph).

The description of Arduino Uno board is given in the table below:

Microcontroller	ATmega328P
Operating Voltage/ Max Current	5V / 40mA
Input Voltage (recommended)	7-12V
Input Voltage (limits)	6-20V
Digital I/O Pins	14 (of which 6 provide PWM output)
Analog Input Pins	6
DC Current per I/O Pin	40 mA DC, and the Current for 3.3V Pin is 50 mA

Flash Memory	32 KB
SRAM	2 KB
EEPROM	1 KB
Clock Speed	16 MHz
Length	68.6 mm
Width	53.4 mm

Table 3.1. Arduino Uno board parameters.

3.2.4. IDE Arduino

The Arduino Integrated Development Environment (IDE) is an open-source Software makes it easy to write code and upload it to the board. It runs on Windows, Mac OS X, and Linux, and the Arduino programming language is based on C/C++. The Software makes sure that the code is correct then you can compile and upload it to the microcontroller.

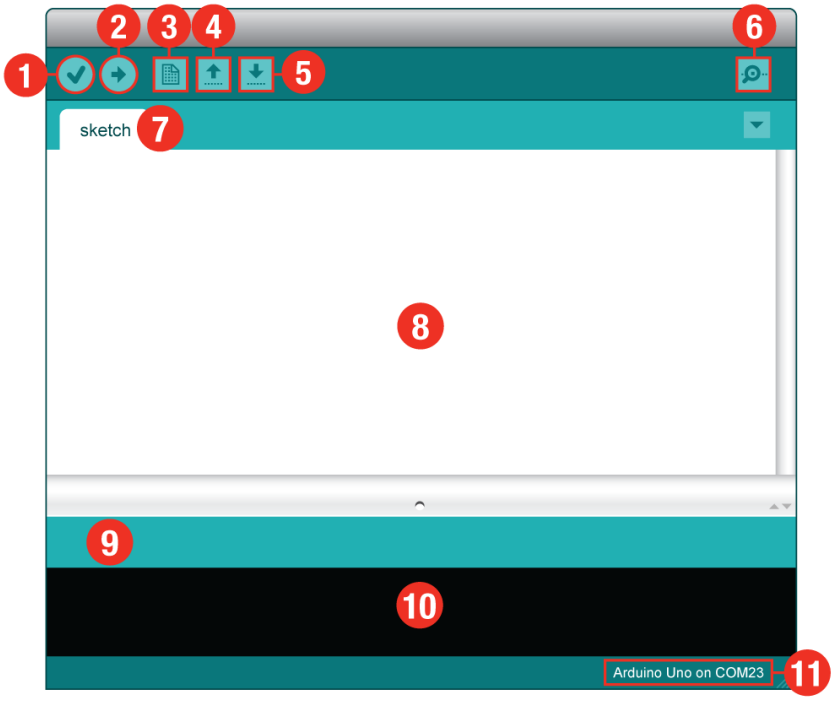

Figure 3.5. Arduino IDE Software.

1. Verify: Compiles and approves your code. It will catch errors in syntax (like missing semicolons or parentheses).
2. Upload: Sends your code to the board.
3. New: This buttons opens up a new code window tab.
4. Open: This button will let you open up an existing sketch.
5. Save: This saves the currently active sketch.
6. Serial Monitor: This will open a window that displays any serial information that our board is transmitting. It is very useful for debugging.
7. Sketch Name: This shows the name of the sketch you are currently working on.
8. Code Area: This is the area where you compose the code for your sketch.
9. Message Area: This is where the IDE tells you if there were any errors in your code.
10. Text Console: The text console shows complete error messages. When debugging, the text console is very useful.
11. Board and Serial Port: Shows you what board and the serial port selections.

- Compile: Convert (a program) into a machine code (Hex file) or lower level form in which the program can be executed.

3.2.5. Why Arduino?

Thanks to its simple and accessible user experience, Arduino has been used in thousands of different projects and applications. The Arduino software is easy to use for beginners, yet flexible enough for advanced users. Teachers and students use it to build low cost scientific instruments, to prove chemistry and physics principles, or to get started with programming and robotics.

3.2.6. The Proteus Design Suite software

The Proteus Design Suite is an Electronic Design Automation (EDA), a Windows application for schematic capture, simulation and circuit board layout modules, depending on the size of designs being produced and the requirements for microcontroller simulation.

3.2.7. Objective

Microcontrollers are widely used in modern electronic equipment's. Some basic applications of microcontroller is given below.

- Widely used in communication systems.
- Used in biomedical instruments.
- Used in robotics.

In order to set up our solution for some particular industrial applications with low cost and energy, for example commanding motor or a pump via Ethernet network, local area network (LAN), we need to use a programmable microcontroller with some additional components.

3.3. Universal Asynchronous Receiver/Transmitter (UART)

UART is used for serial data communication. UART is a piece of hardware that translates between parallel bits of data and serial bits. UART is usually an integrated circuit used for serial communications over a computer or peripheral device serial port.

3.3.1. Serial Communication

In telecommunication and computer science, serial communication is the process of sending data one bit at a time, sequentially, over a communication channel or computer bus.

The serial communication used to communicate between the Arduino board and a computer or other devices. All Arduino boards have at least one serial port also known as a UART. It communicates on digital pins 0 (RX) and 1 (TX) of the Arduino board as well as with the computer via USB. Thus, if you use these functions, you cannot also use pins 0 and 1 for digital input or output.

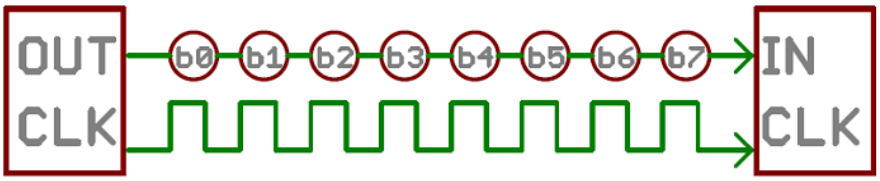

Figure 3.6. Serial Communications.

3.3.2. Wireless Communication

Wireless Communication is the transfer of information or power between two or more points that are not connected by an electrical conductor.

The most common wireless technologies use radio, with radio waves distances can be short, such as a few meters for television or as far as thousands or even millions of kilometers for deep space radio communications such as the mobile communications standard 4G (LTE), also the wireless local area network (Wi-Fi), and Bluetooth are some of the most common modern wireless technologies, which are less secure than wired connections.

3.3.3 Serial Peripheral Interface (SPI)

Serial Peripheral Interface was developed by Motorola, announced in 1979, and has become a standard.

SPI is an interface bus commonly used to send data between microcontrollers and small peripherals such as shift registers, sensors, network cards and secure digital (SD) cards, it uses separate clock and data lines, along with a select line to choose the device you wish to talk to, therefore the SPI devices communicate using a master-slave architecture with a single master.

SPI is a Serial Interface uses the following signals to serially exchange data with another device:

- **SS:** This signal is known as Slave Select. When it goes low, the slave device will listen for SPI clock and data signals.
- **SCLK or SCK:** This is the Serial Clock Signal. It is generated by the master device and controls when data is sent and when it is read.
- **MOSI or SDO:** This is the Serial Data Output signal. SDO carries data out of a device.
- **MISO or SDI:** is the Serial Data Input line. It carries data into a device

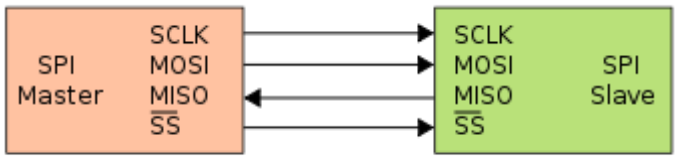

Figure 3.7. Single master, single slave SPI implementation.

SPI creates a data loop between two devices. Data leaving the master on the SDO (serial data output) line. Data entering into the master with serial data input, SDI line. A clock (SCK) is generated by the master device. It controls when and how quickly data is exchanged between the two devices. Select signal (SS) allows a master device to control when a particular slave is being addressed.

3.4. The web server

Web servers are computers that deliver (serves up) web pages, every web server has an IP address and possibly a domain name.

The primary function of a web server is to store, process and deliver web pages to clients, the communication between client and server takes place using the Hypertext Transfer Protocol (HTTP).

Pages delivered are most frequently HTML (Hypertext Markup Language) documents, which may include images, style sheets and scripts in addition to text content.

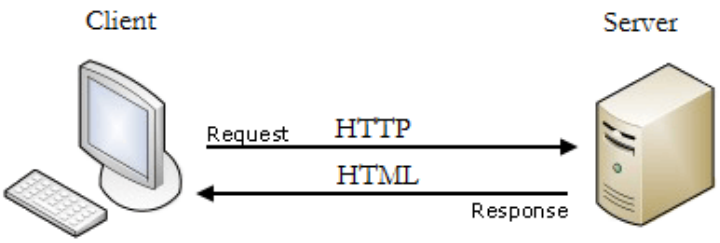

Figure 3.8. Web server architecture.

A user agent, commonly a web browser or web crawler, initiates communication by making a request for a specific resource using HTTP and the server responds with the content of that resource.

3.4.1. Hypertext Transfer Protocol (HTTP)

HTTP (Hypertext Transfer Protocol) is the set of rules for transferring files (text, graphic images, sound, video, and other multimedia files) on the World Wide Web (WWW).

As soon as a web users open their web browser, the user is indirectly making use of HTTP, it’s an application protocol that runs on top of the TCP/IP protocol suite.

3.4.2. Web page

Web page is an Electronic (digital) document created with HTML (Hypertext Markup Language) and accessible with a browser. In addition to text and graphics, web pages may also contain downloadable data files, audio and video files, and hyperlinks to other pages or sites.

3.5. Theory and Operation of Ethernet

To understand how Ethernet works, it is first necessary to understand the concept of packet encapsulation, and how the protocol stack fits into this concept.

Each layer of the protocol stack is responsible for a particular level of functionality. As an example, the physical layer is concerned with the actual electrical transmission of bits across a medium.

This concept can best be explained using the example shown in Figure 3.9, this example shows how each layer associated with a web browser session maps to the protocol stack model.

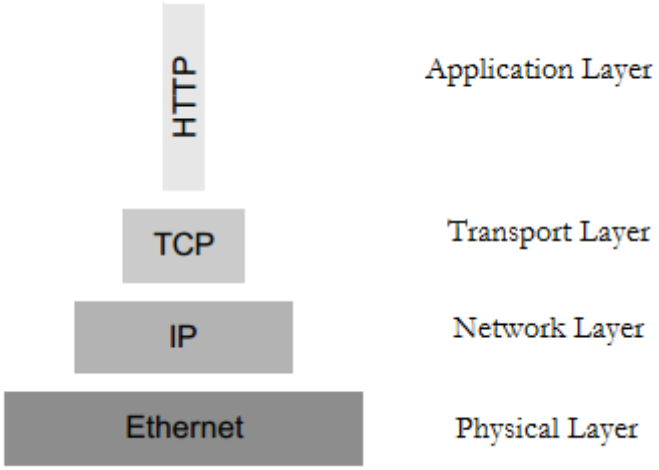

Figure 3.9. TCP/IP suite using HTTP Protocol in Application layer.

3.5.1 Network Interface Card (NIC)

Also known as a network interface controller which is a hardware component that connects device to the network, it allows devices to communicate over a network, either by using cables or wirelessly.

Modern network interface controllers offer advanced features such as partitioning into multiple logical interfaces, and support for multiple receive and transmit queues.

3.5.2. Carrier Sense Multiple Access/Collision Detection (CSMA/CD)

Ethernet is essentially a packet based Local Area Network (LAN), built on the Carrier Sense Multiple Access with Collision Detect (CSMA/CD) protocol [16].

All the Ethernet devices are permitted to "listen" (receive) but only one device at a given time is permitted to "talk" (transmit), any device wishing to transmit must first sense whether the medium is currently active. This is effectively the "carrier sense" part of the algorithm, if the medium is already active, the node must wait until the activity stops and a predetermined period of silence passes.

If the node detects that the channel is free, it may initiate a transmission attempt, after starting its transmission, its data might collides with that of another station attempting to transmit at the same time, the transmitting station will continue to transmit for a short additional period to ensure that the collision propagates throughout the network. After this, the transmitting stations stop transmission for a random period of time determined by the algorithm before attempting to transmit again.

The collision is detected by comparing the transmission voltage on the channel with a threshold voltage. If this transmission voltage exceeds the threshold voltage, it means a collision has taken place.

3.5.3. Carrier Sense Multiple Access/Collision Avoidance (CSMA/CA)

Unlike CSMA/CD the Collision Detect which deals with transmissions after a collision has occurred, CSMA/CA acts to prevent collisions before they happen.

In CSMA/CA, as soon as a node receives a packet that is to be sent, it checks to be sure the channel is clear (no other node is transmitting at the time). If the channel is clear, then the packet is sent. If the channel is not clear, the node waits for a randomly chosen period of time, it is particularly important for wireless networks, where the collision detection of the alternative CSMA/CD is unreliable due to the hidden node problem.

- **The hidden node problem:** In wireless networking, the hidden node problem or hidden terminal problem occurs when a node is visible from a wireless access point (AP), but not from other nodes communicating with that AP.

  As shown in Figure 3.10. Station A can communicate with Station B, Station C can also communicate with Station B, however, stations A and C cannot communicate with each other since they cannot sense each other on the network, because they are out of range of each other.

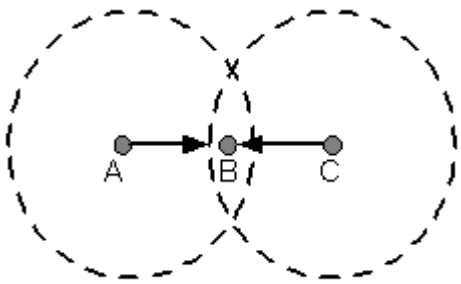

Figure 3.10. Wireless network, hidden node problem.

3.5.4. Ethernet Packet

The nodes on a network exchange data in a serial format (one data bit a time). The Ethernet frame size consists of 64 to 1518 bytes depending upon the data to be sent [19]. The Ethernet packet frame is shown in Figure 3.11.

Preamble (7 Bytes)	SFD (1Byte)	Destination Address (6 Bytes)	Source Address (6 Bytes)	L (2 Bytes)	Data (46 to 1500 Bytes)	FCS (4 Bytes)

Frame

Figure 3.11. Ethernet Packet.

- **Preamble:** This is a 7-byte sequence consisting of alternate I's and O's. It is transmitted at the start of each packet that enables the receiver to "lock" to the incoming bit stream.
- **Start Frame Delimiter (SFD):** The preamble sequence is followed by a start of frame marker, which indicates that the data portion of the message will follow. It consists of 1-byte.
- **Destination Address (DA):** The destination address is a 6-byte value that is transmitted least significant bit (LSB) first. The DA is used by the receiving MAC (Media Access Controller) to determine if the incoming packet is addressed to this particular node.

  If the receiving node matches its own unique node address and the address within the DA field, it will attempt to receive the packet. If no match is found, the remainder of the packet is ignored.

- **Source Address (SA):** This too is a 6-byte value which is transmitted LSB first. The SA field is supplied by the transmitting MAC, which inserts its own unique address into this field as the frame is transmitted, indicating that it was the originating station.

  Length: This is a 2-byte field that follows the SA. Its function is to ensure that the message protocol is compatible with IEEE 802.3 standard.

- **Data Field:** This field contains the actual message that is being transferred and is 46-1500 bytes in length.

- **Frame Check Sequence (FCS):** This is a 4-byte field that contains the cyclic redundancy check (CRC) for the entire frame .The CRC is computed by the transmitting station on DA, SA, length and data field and appended as last 4 bytes of the frame. Same CRC algorithm is used to compute the CRC value at the receiving station. The two values are compared to provide an error-detection mechanism in case of corrupted data.

3.5.5. Form Ethernet to a Transport Service

A switch is a special case of a bridge, because each of its ports contains an isolated collision domain and is usually connected to only one device. Therefore there is no need for CSMA/CD at all as long as only one host is connected per port, all ”collision” handling is done in the switch backplane with queuing.

The switch always forwards frames without disruption to the correct destination if it is known, because Ethernet devices flood frames with unknown recipients and can deploy spanning tree protocols to detect loops, Ethernet networks are easy to both build and expand.

The ability to construct LANs in a plug and play manner is probably the most cogent reason why Ethernet has experienced such a huge success. The various transport services are meant to increases the available network capacity per each domain as broadcasts are more limited and collisions occur less frequently, we name three transport operation, *the bridge operation, Hub operation, and the switch operation.*

- **Bridge operation:** Frames destined to same domain are not broadcast to other domains.

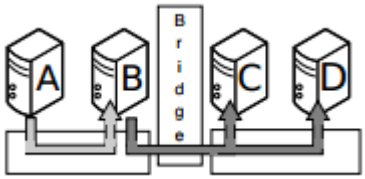

Figure 3.12. Interconnection devices, Bridge operation.

- **Hub operation:** Frames are broadcast to all ports.

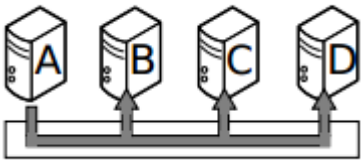

Figure 3.13. Interconnection devices, Hub operation.

- **Switch operation:** Frame is sent to exact port where the recipient is connected.

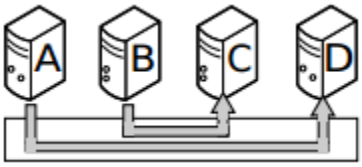

Figure 3.14. Interconnection devices, Switch operation.

3.5.6. Data Encoding Techniques

Data Encoding is the method by which analog/digital data is converted into analog/digital electromagnetic signals for transmission via wired/wireless transmission links.

The pattern of voltage, current or photons used to represent the digital data on a transmission link is called line encoding. The common types of line encoding are unipolar, polar, bipolar, and Manchester encoding.

- Unipolar encoding: A positive voltage represents a binary 1, and zero volts indicates a binary 0. It is the simplest line code.

- Bipolar encoding: a binary 1 is encoded alternately as a positive voltage or a negative voltage.

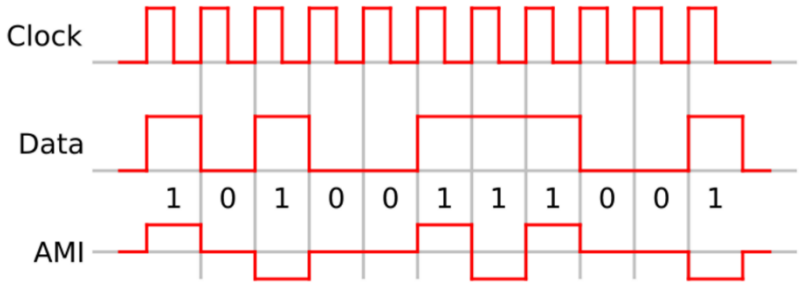

Figure 3.15. An example of bipolar encoding, known as AMI (Alternate mark inversion).

- Manchester encoding: also known as phase encoding, in the middle of each clock pulse, a bit 0 is expressed by a low-to-high transition, a bit 1 by high-to-low transition (according to G.E. Thomas' convention—in the IEEE 802.3 convention, the reverse is true)

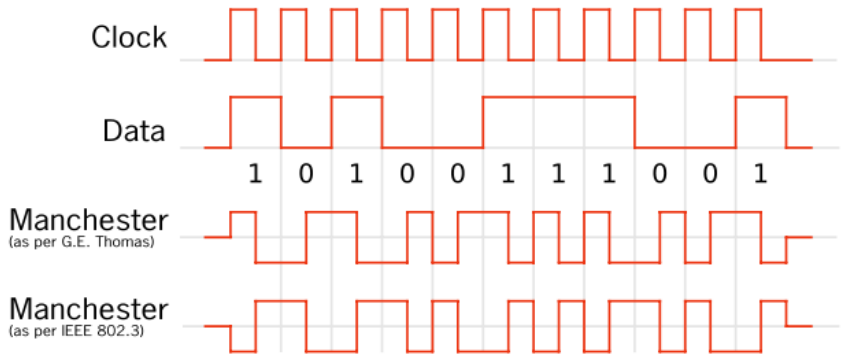

Figure 3.16. An example of Manchester encoding showing both conventions.

- Differential Manchester encoding: In the middle of each clock pulse, a bit 0 is expressed by keeping the previous status of transition whether is high-to-low or low-to-high, a bit 1 is expressed by changing the previous transition status.

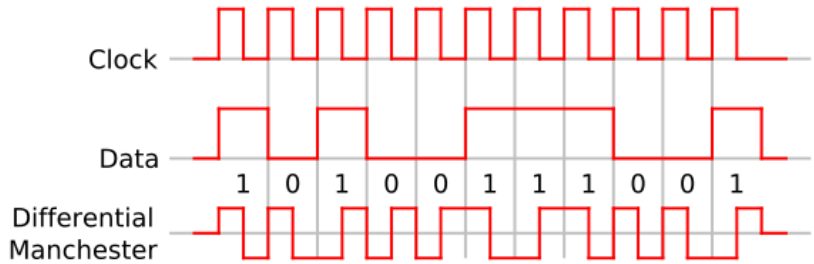

Figure 3.17. An example of Differential Manchester encoding.

Line encoding takes place at the physical layer of the OSI model. There are many other types of line encoding but Manchester, and differential Manchester, codes are commonly used for local area networks.

3.6. Motor control with Arduino Uno board Via Ethernet Network

Motor starting can be in 3 ways:

- Applying full load voltage at intervals of time: Direct On Line Starting
- Applying reduced voltage gradually: Star Delta Starter and Soft starter
- Applying part winding starting: Autotransformer starter

In order to build our controlling system, direct on line starting, we need to set up the Arduino board with Atmega328P MCU as web server and configure the SPI's each of microcontroller and the Ethernet network card, moreover we add status indication using red and green LED's.

3.6.1. Hardware

Electronic components are specified by their parameters, in order to set up our commanding system in industrial environment we need a suitable component works in harsh and difficult situations.

Moreover, in addition to our microcontroller the main component of our controlling system we need network interface card to connect to the network, also a relay module needed to switch ON or OFF the motor and some LED's to indicate the status.

After doing research and looking at the parameters of many components, we select the following equipment:

- Network Interface Card: ENC28j60 Ethernet module is a stand-alone Ethernet controller with an industry standard Serial Peripheral Interface (SPI). It is designed to serve as an Ethernet network interface for any controller equipped with SPI.

  A typical application circuit using of this device is shown in Figure 3.19, the Table 3.2 shows some parameters of this module.

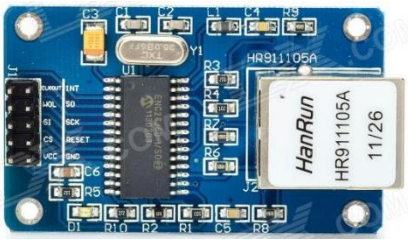

Figure 3.18. ENC28j60 Ethernet module (Photograph).

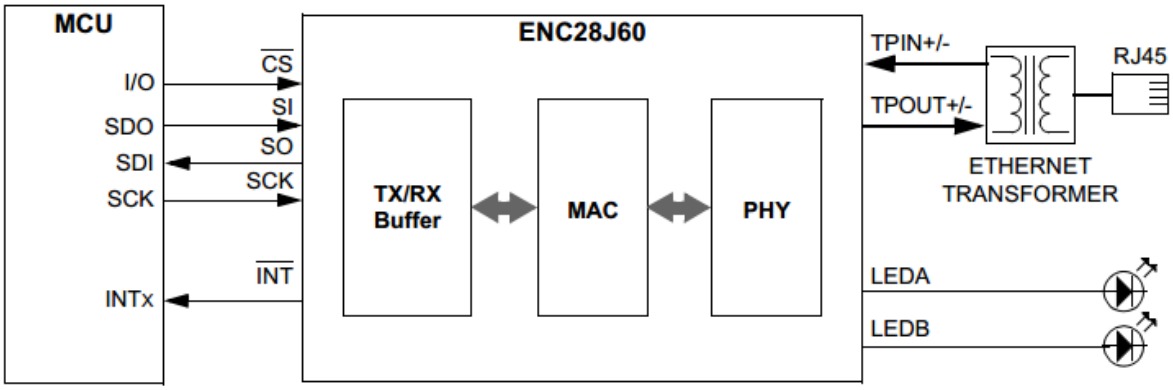

Figure 3.19. ENC28j60 circuit diagram.

Module	ENC28j60
Operating Voltage	3.1V to 3.6V (3.3V typical)
Temperature Range	-40°C to +85°C
Clock Speed	Up to 25 MHz
TPIN+/-	Differential Manchester signal input
TPOUT+/-	Differential Manchester signal output.
Buffer Operation	first in, first out (FIFO)
SPI Interface	1
LEDA and LEDB	Two Programmable LED Outputs for LINK, TX, RX, and Collision

Table 3.2. ENC28j60 Ethernet module parameters.

- Relay: JQC-3FF-06 module is a switch that opens and closes the circuit electromechanically or electronically, with it we control one electrical circuit by opening and closing contacts in another circuit. When a relay contact is normally open (NO), there is an open contact when the relay is not energized.

Figure 3.20. The Relay module (Photograph).

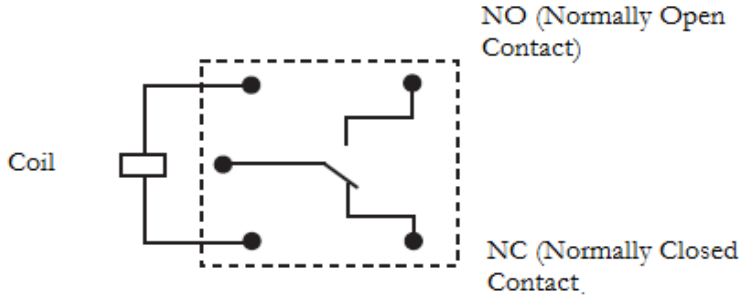

Figure 3.21. Relay Wiring Diagram.

Module	JQC-3FF-06
Operating Voltage	6V (7.8V Maximum)
Temperature Range	-40°C to +85°C
Humidity Range	35% to 85%
Coil Resistance	100ohm
Maximum Turn-On Time	10 ms
Maximum Turn-Off Time	5 ms
Maximum Switching Voltage	277V AC / 30V DC
Maximum Switching Current	10 A
Mechanical Endurance	10,000,000 Operations

Table 3.3. JQC-3FF-06 relay module parameters.

- LED's: light emitting diode, LEDs are so common, they come in dozens of different shapes and sizes, mostly used for two things: illumination and indication.

The main advantages offered by these modules are summarized in the following 5 characteristics:

- Low cost.
- Low power consumption.
- Flexible and extensible networks.
- Simple and cheap installation.
- Temperature working range: -40 to 85 degrees Celsius.

3.6.2. Network Architecture

Using twisted pair cable in star topology with both CSMA collision detection and collision avoidance for wired/wireless communication carried by the switch in backplane. Figure 3.22 shows different types of communication and operating systems as well.

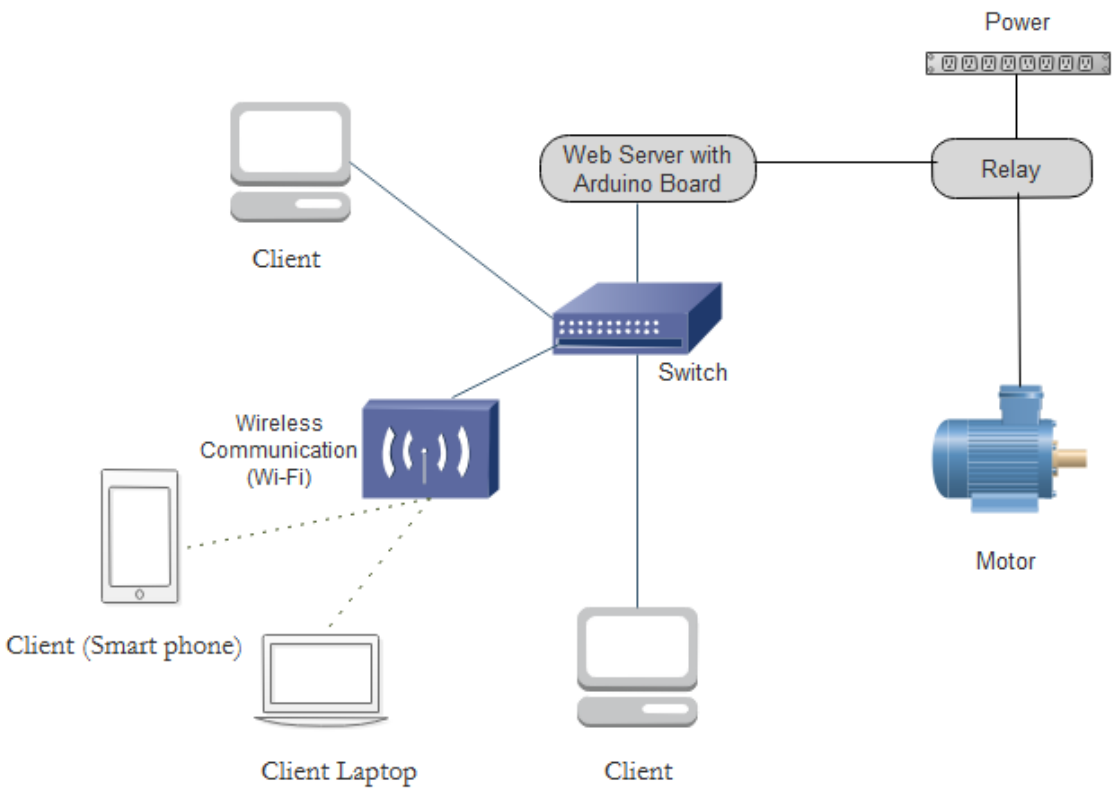

Figure 3.22. Motor control with Arduino Uno board architecture.

3.6.3. Algorithm

The operation of the web server and control block are summarized in the following charts:

Figure 3.23 represents the block diagram of our web server, it shows the evolution of each stage to set up HMI web page.

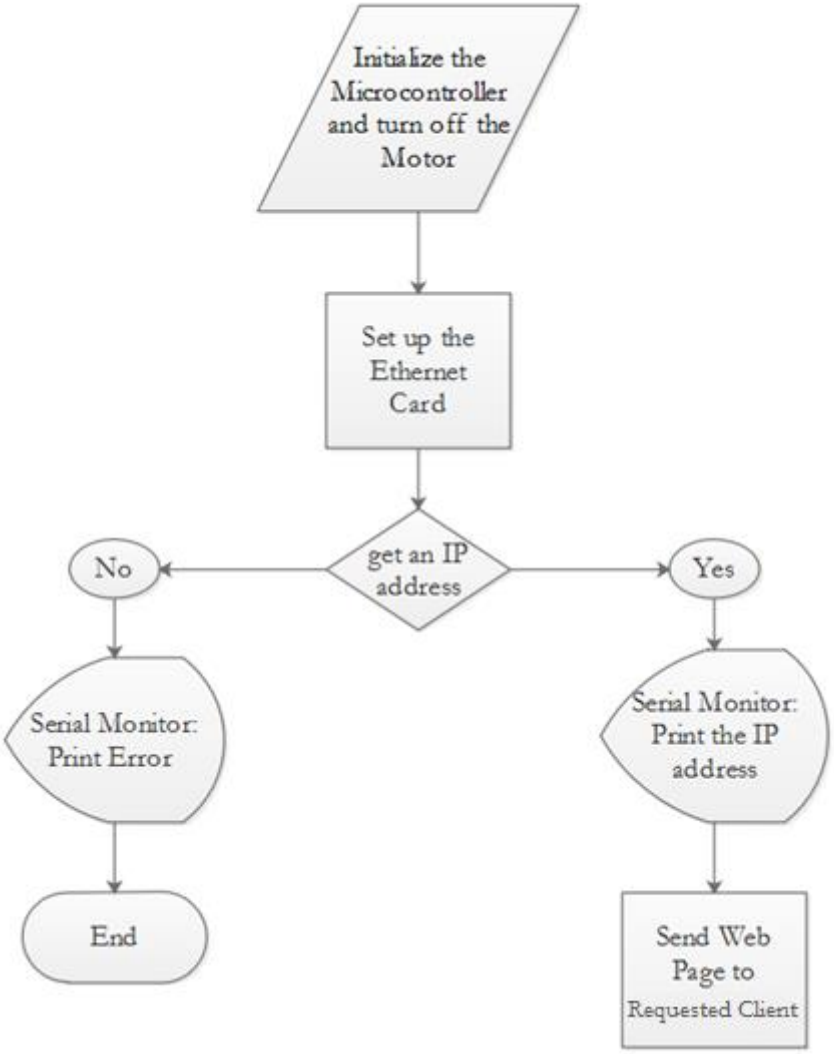

Figure 3.23. Web Page block diagram.

Figure 3.24 represents the block diagram of controlling process via HTML web page

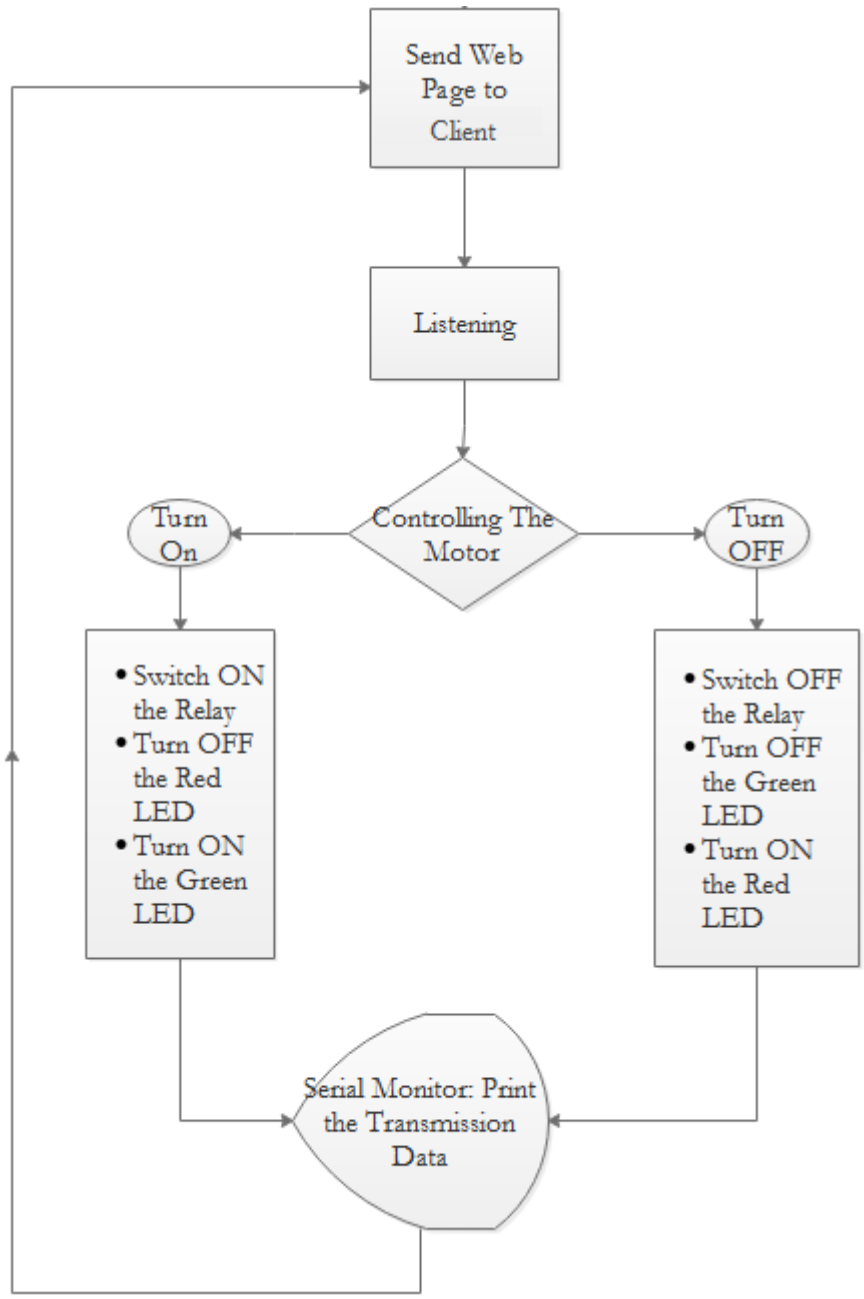

Figure 3.24. Controlling block diagram.

3.6.4. Circuit design

A circuit design is the process of working out the physical form that an electronic circuit will take, the result of the circuit design process is the instructions on how to construct the physical electronic circuit.

The process begins with selecting the circuit components needed and configure them to achieve compatible circuit design for our controlling system, Figure 3.25 display the developed design prototype of motor control through a web server.

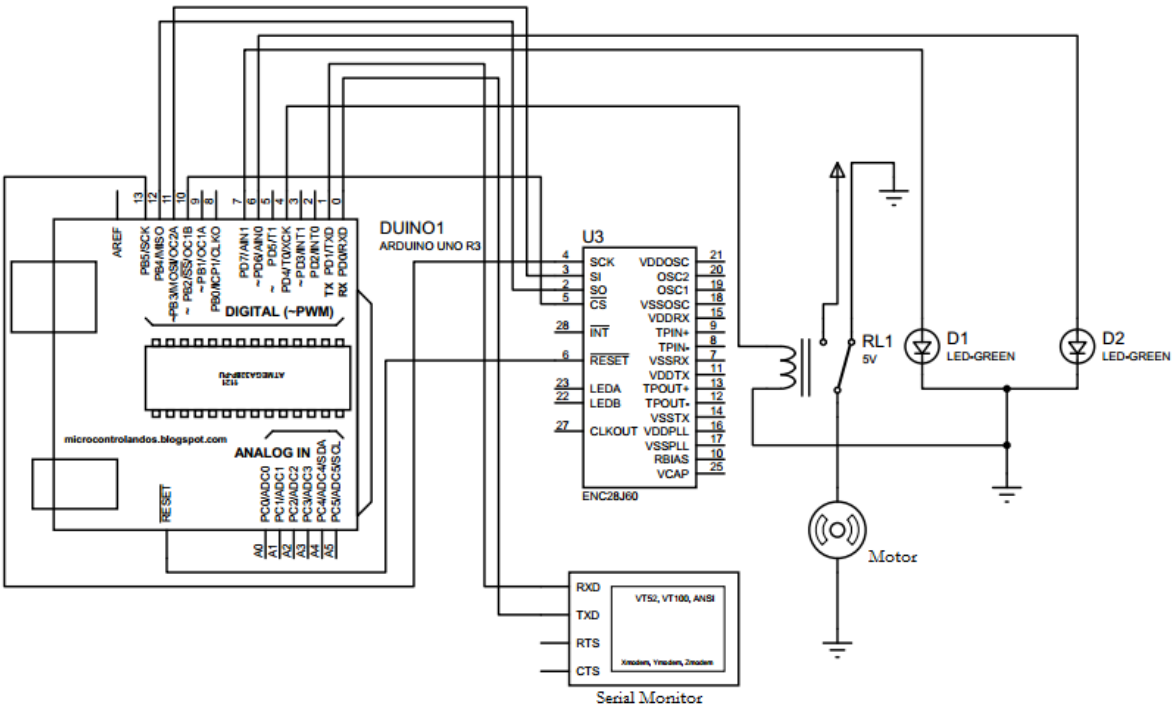

Figure 3.25. Motor control, circuit design.

3.6.5. Programming and libraries

After seeing the algorithms and circuit design of our controlling system, we program the microcontroller using Arduino IDE software, with C++ based programming language, from network interface card configuration to sending TCP Packet needs an advanced skills in programming, Figure 3.26 shows which IP address, and MAC address, we have selected for the web server, also define pins number of the microcontroller selected for relay, green/red LEDs, and the control select pin for network interface ENC28j60.

Including <Ethercard> Library offers very useful needed functions in our program, such as setting up the HTML web page and sending the HTTP response.

Figure 3.26. IDE software, Programming process.

3.6.6. Simulation with Proteus software

After the conversion of algorithms to program code and designing a circuit, it must be both verified and tested to reach the implementation of the system, therefore we always have to go through simulation concept, a very important step, using Proteus Design Suite software.

This step will see the behavior of the system in purpose to detect and correct defects before launching the project. The second purpose of going through this step is to optimize the system.

The microcontroller simulation in Proteus works by applying either a hex file or a debug file to the microcontroller part on the schematic.

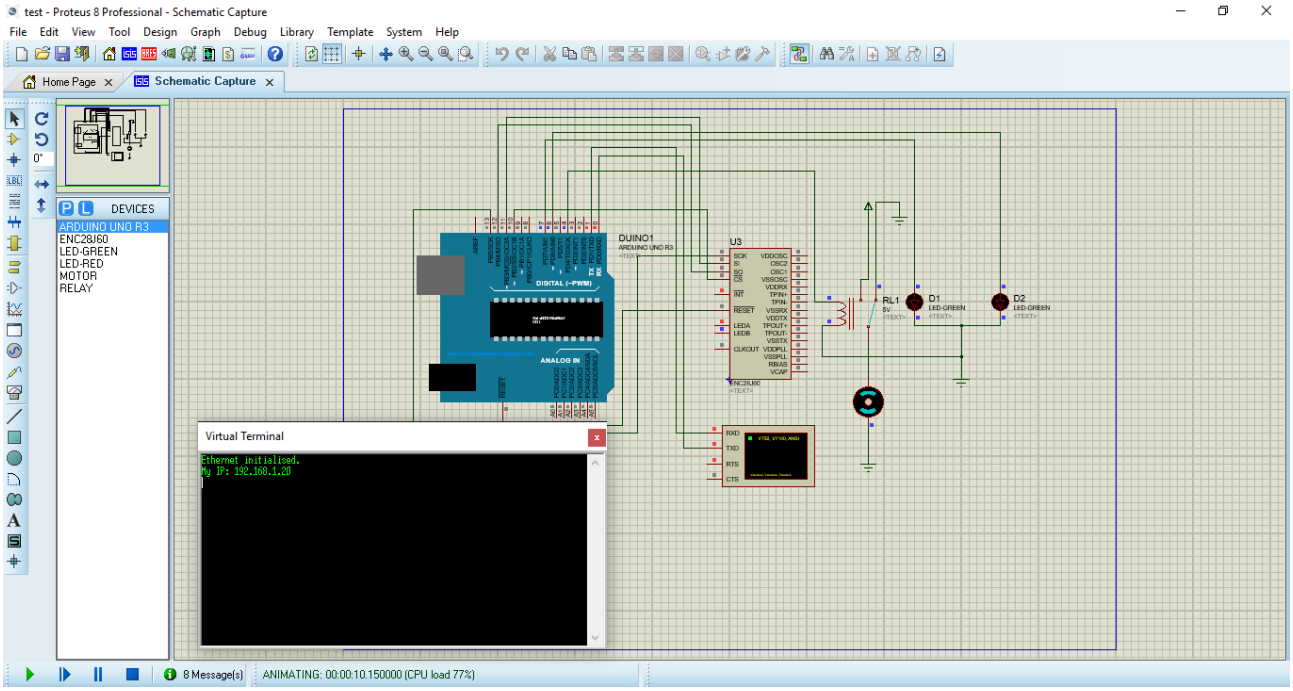

Figure 3.27. Proteus Design Suite software, Simulation process.

3.6.7. Implementation of the Controlling System

To make HTTP requests from a browser client machine we refer to the IP address of our web server (192.168.1.20), by clicking on the red HTML button we can switch ON or OFF the motor.

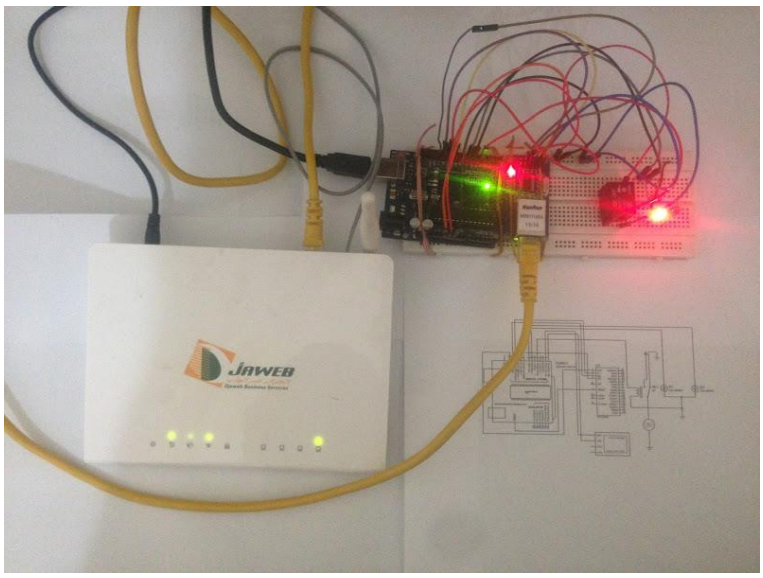

Figure 3.28. Switch OFF command (Photograph).

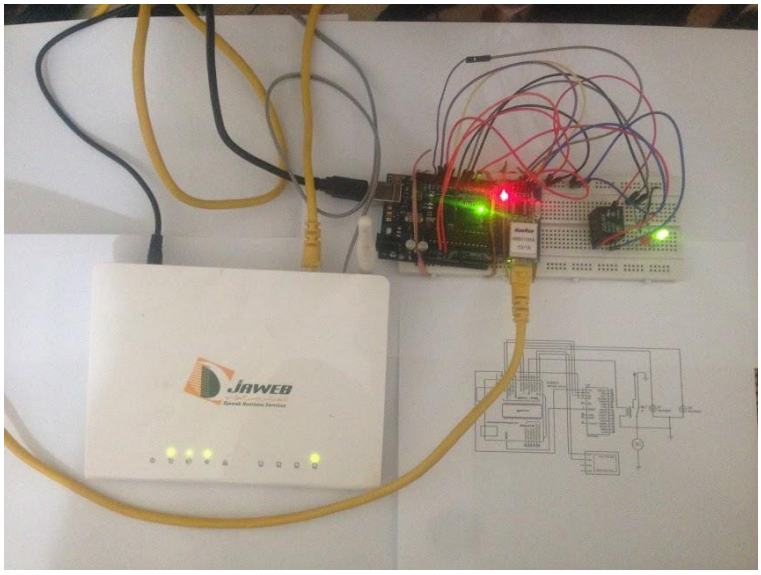

Figure 3.29. Switch ON command (Photograph).

These are the screen shots from different clients of our controlling system:

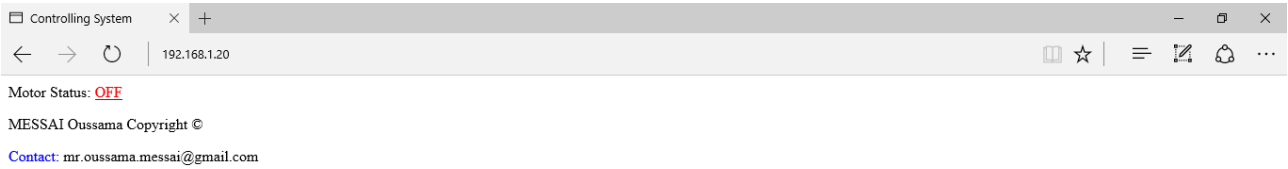

Figure 3.30. HMI (Computer view) with wired communication.

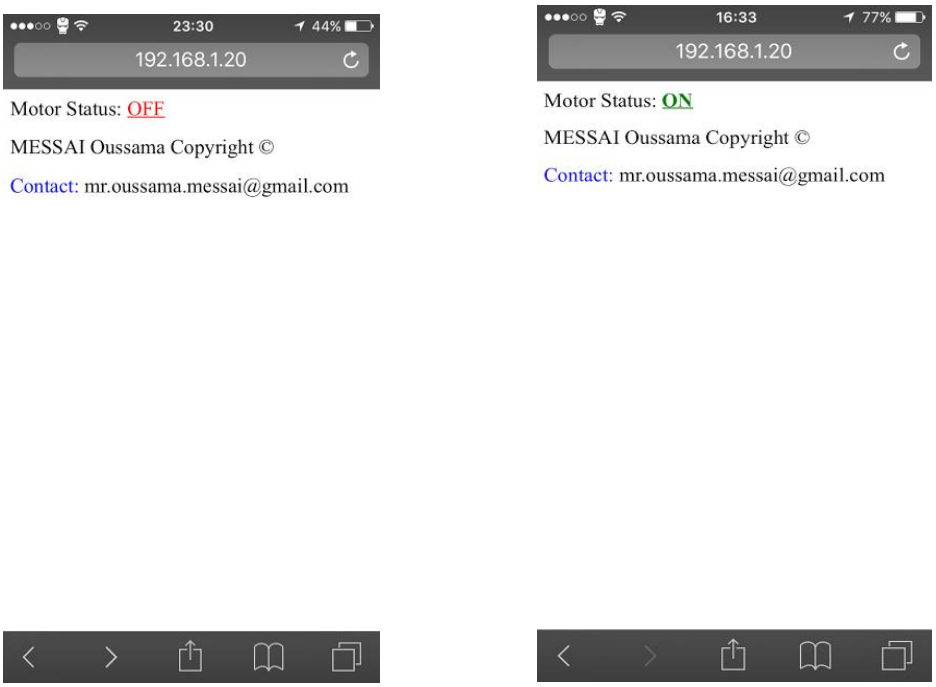

Figure 3.31. HMI (Smart phone view) with wireless communication.

3.6.8. Comparison with Siemens Solution

A comparison table for small industrial applications such as on-off control. The simplest type of control. E.g. turn on-off a pump to fill the tank.

System	Siemens networking Solution for small industrial applications	Arduino Based Solution for small industrial applications
Energy consumption	14 W	Very low approximately 250mW
Temperature Range	-40°C to +85°C	-40°C to +85°C
Number of Applications	Depends on the I/O slot could be (16 per each slot)	Depend on output pins number, (8 or 9 applications)
The Cost	Much Expensive	Cheap

Network interfacing card	1 card, usually with two RJ45 connectors	1 card, with one RJ45 connector
CPU	32 bit	8 Bit
Security	convinced	weak
Automation type	both for the centralized and decentralized	Only for decentralized
Programming concept	Easy	Complicated
Isochronous mode	Yes	No
Communication protocol	TCP and UDP	TCP

Table 3.4. Comparison table.

3.7. Conclusion

In this chapter, we presented the proposed solution with associated algorithms and a HMI developed for remote control system via Ethernet using a microcontroller as a web server.

This application uses the EtherCard library with the format lines HTML inside and the reading of the HTTP request by customers. Also, the application integrate some functions in the Arduino programming language.

GENERAL CONCLUSION AND OUTLOOK

Ethernet is steadily establishing itself as the bedrock for almost all communication. The world's most used field bus technology, Profibus, has a successor, Profinet, which uses Ethernet based communications.

As a conclusion, Profinet seems like a solid concept but the devices used is much expensive specially for small applications, also it may have vulnerabilities and security issues because the Profinet networks are secured with the same technologies as other.

The overall our prototype system meets all the objectives proposed in this project. The hardware and the control algorithms implemented are capable of acquiring data from the clients. Moreover, it can process data in both directions, consequently is a bidirectional system, this project is available for using as an acquisition and controlling system for different applications compatible with varied devices and operating systems as well. The proposed network control system is pointed to small scale automation scenarios, or non-critical applications, also it could be widely used in various sectors such as home automation.

Further development of this subject could include designing and building advanced HMI for isochronous industrial network applications.

Interfacing Arduino with the ENC28J60 will further gives us the freedom of using the internet on Arduino, thus allowing us to jump into the next step and make IoT (The Internet of Things) devices, which are quite famous lately.

The Internet of Things (IoT) has been called the next Industrial Revolution, it will change the way all businesses, governments, and consumers interact with the physical world. By 2020, there will be 34 billion devices connected to the internet.

Appendix A- Application code

A.1 The application code uploaded to the Arduino is detailed below:

```
/*Messai Oussama @copyright is reserved
Contact: mr.oussama.messai@gmail.com*/

#include <EtherCard.h>

static byte mymac[] = { 0x74,0x69,0x69,0x2D,0x30,0x31  };
static byte myip[] = { 192,168,1,20 };
static byte gwip[] = { 192,168,1,1 };

#define BUFFER_SIZE   500
#define CS_PIN 10
#define RELAY 4
#define Red 7
#define Green 6

byte Ethernet::buffer[BUFFER_SIZE];
BufferFiller bfill;
bool relayStatus = false;


const char http_OK[] PROGMEM =
"HTTP/1.0 200 OK\r\n"
"Content-Type: text/html\r\n"
"Pragma: no-cache\r\n\r\n";

const char http_Found[] PROGMEM =
"HTTP/1.0 302 Found\r\n"
"Location: /\r\n\r\n";
```

```
const char http_Unauthorized[] PROGMEM =
"HTTP/1.0 401 Unauthorized\r\n"
"Content-Type: text/html\r\n\r\n"
"<h1>401 Unauthorized</h1>";

void homePage()
{
  bfill.emit_p(PSTR("$F"
    "<meta http-equiv='refresh' content='5'/>"
    "<title>Controlling System </title>"
    " Motor Status: <a href=\"?relay=$F\">$F</a><br />"
    "<p></p>"
    "<p></p>"
    "<p> MESSAI Oussama   Copyright &#169; </p>"
    "<p><font color=\"blue\">Contact:</font><font color=\"black\">
     mr.oussama.messai@gmail.com</font></p>"),
  http_OK,
  relayStatus?PSTR("off"):PSTR("on"),
  relayStatus?PSTR("<font   color=\"green\"><b>ON</b></font>"):PSTR("<font
  color=\"red\">OFF</font>"));
  }

void setup()
{
  Serial.begin(250000);
  pinMode(RELAY, OUTPUT);
  pinMode(Green, OUTPUT);
  pinMode(Red, OUTPUT);



  if (ether.begin(BUFFER_SIZE, mymac, CS_PIN) == 0)
    Serial.println("Cannot initialise ethernet.");
  else
    Serial.println("Ethernet initialised.");
```

```
  ether.staticSetup(myip);
  ether.printIp("My IP: ", ether.myip);



}

void loop()
{
  digitalWrite(RELAY, relayStatus);
  delay(5);   // necessary for my system
  word len = ether.packetReceive();   // check for ethernet packet
  word pos = ether.packetLoop(len);   // check for tcp packet

  if (pos) {
    bfill = ether.tcpOffset();
    char *data = (char *) Ethernet::buffer + pos;
    if (strncmp("GET /", data, 5) != 0) {
      // Unsupported HTTP request
      // 304 or 501 response would be more appropriate
      bfill.emit_p(http_Unauthorized);
    }
    else {
      Serial.print("----");
      Serial.print(data);
      Serial.println("----");
      data += 5;

      if (data[0] == ' ') {
        // Return home page
        homePage();
      }
      else if (strncmp("?relay=on ", data, 10) == 0) {
        relayStatus = true;
        bfill.emit_p(http_Found);
        digitalWrite(Red, LOW);
```

```
        digitalWrite(Green, HIGH);

      }

      else if (strncmp("?relay=off ", data, 11) == 0) {
        relayStatus = false;
        bfill.emit_p(http_Found);
        digitalWrite(Green, LOW);
        digitalWrite(Red, HIGH);

      }

      else {
        // Page not found
        bfill.emit_p(http_Unauthorized);
      }
    }

    ether.httpServerReply(bfill.position());    // send http response
  }
}
```

Appendix B- Data sheet

B.1 From Data sheet of ATmega32 MCU

Ordering Information Table:

Speed (MHz)	Power Supply	Ordering Code	Package[1]	Operational Range
8	2.7 - 5.5V	ATmega32L-8AC ATmega32L-8PC ATmega32L-8MC	44A 40P6 44M1	Commercial (0°C to 70°C)
		ATmega32L-8AI ATmega32L-8PI ATmega32L-8MI ATmega32L-8AU[2] ATmega32L-8PU[2] ATmega32L-8MU[2]	44A 40P6 44M1 44A 40P6 44M1	Industrial (-40°C to 85°C)
16	4.5 - 5.5V	ATmega32-16AC ATmega32-16PC ATmega32-16MC	44A 40P6 44M1	Commercial (0°C to 70°C)
		ATmega32-16AI ATmega32-16PI ATmega32-16MI ATmega32-16AU[2] ATmega32-16PU[2] ATmega32-16MU[2]	44A 40P6 44M1 44A 40P6 44M1	Industrial (-40°C to 85°C)

This Figure shows the safe Operating area of ATmega328P. Maximum frequency vs Vcc:

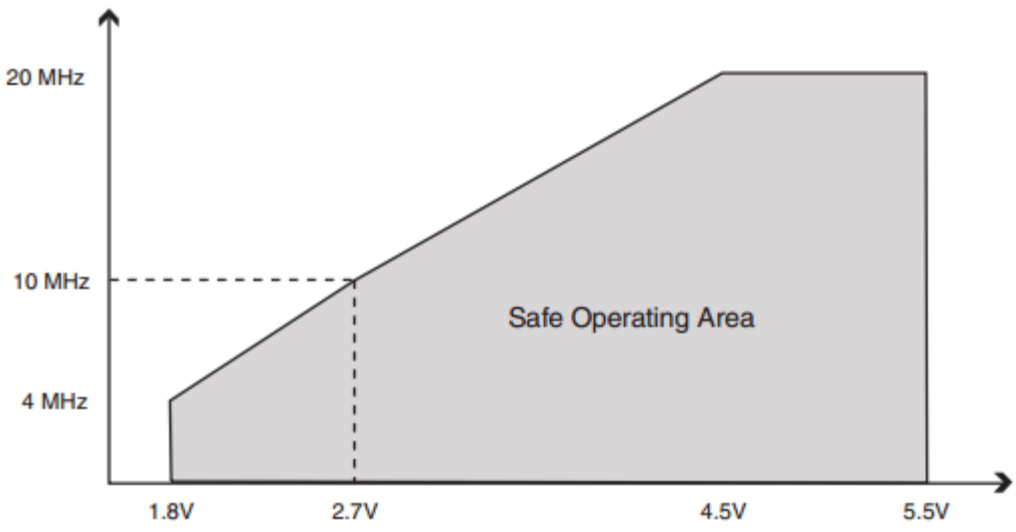

Figure shows I/O Pin Pull-up Resistor Current vs. Input Voltage (VCC = 5V):

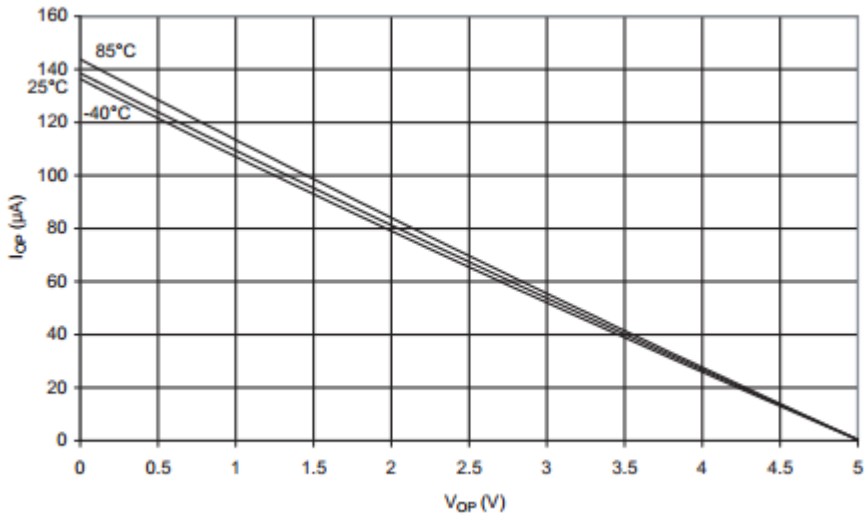

B.1 From Data sheet of JQC-3FF-06 Relay module

Life curve Figure:

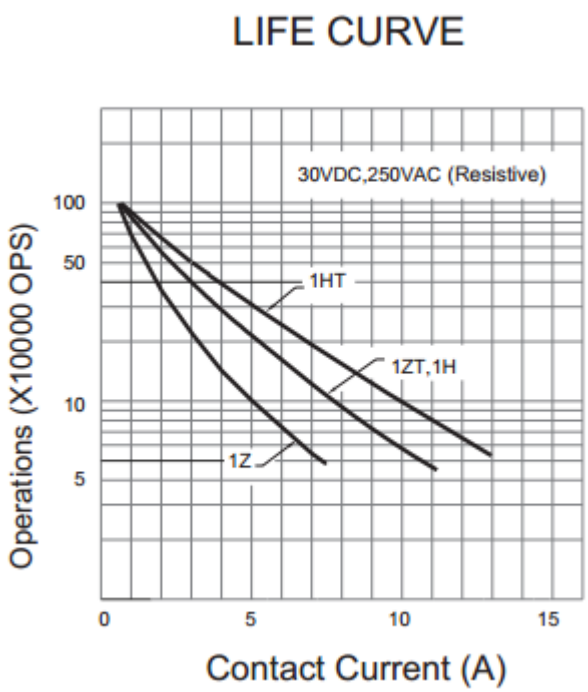

Appendix C- Prices on ebay and CD attached Contents

These are screen shot of products princes (Accessed June 2016)

C.1 SIMATIC TIA Portal Software

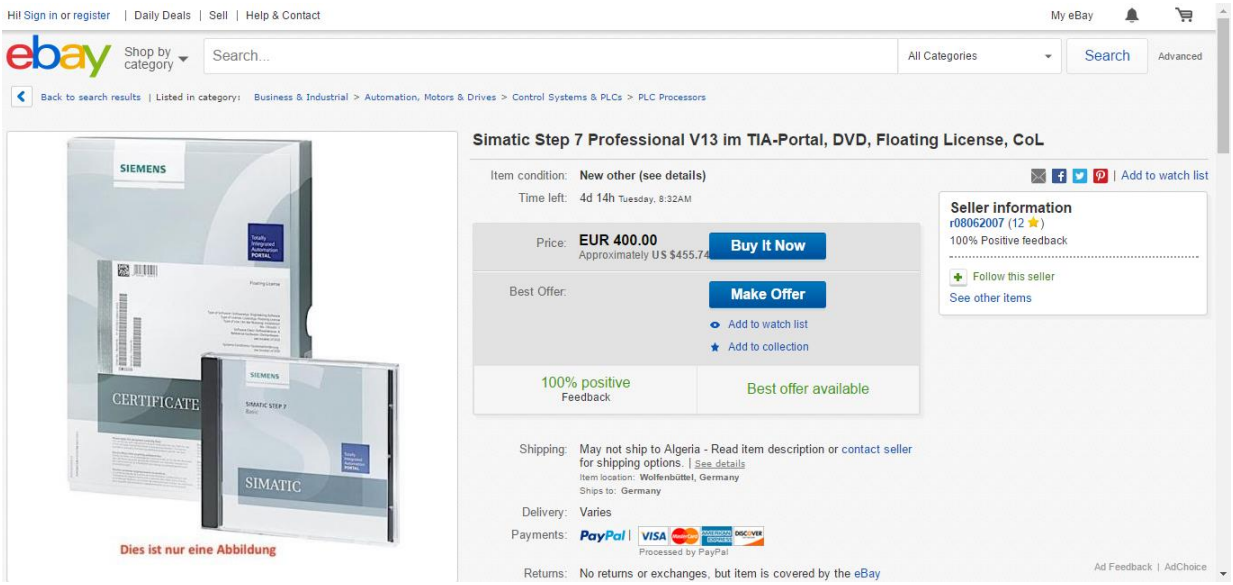

C.2 Siemens CPU 314C-2PN/DP

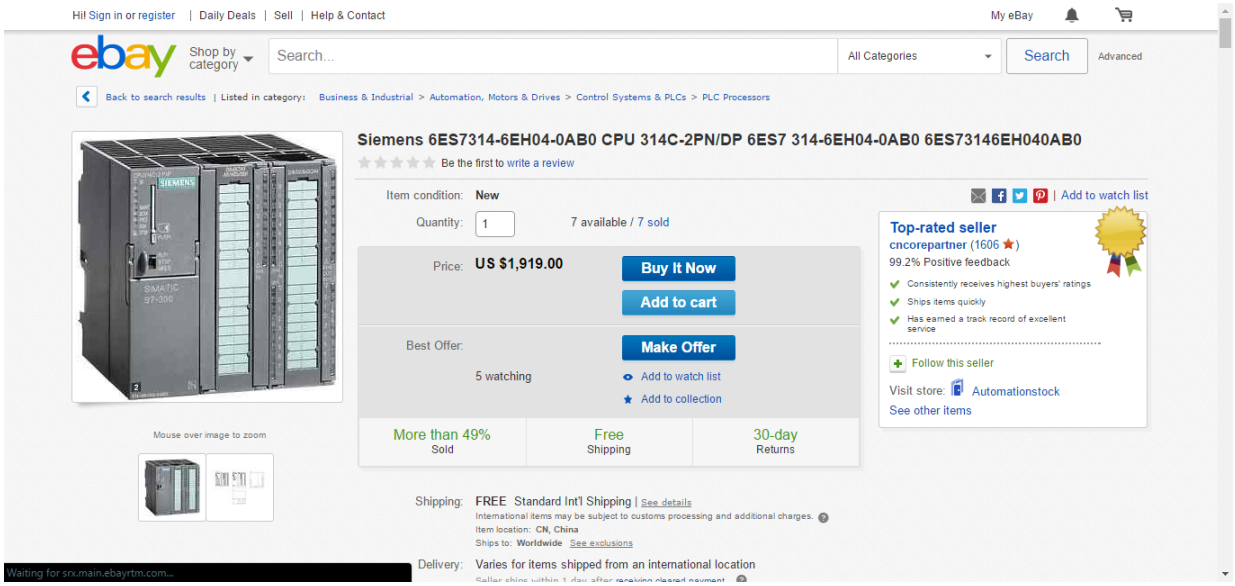

C.3 Siemens Multi Panel 177 6 inch Touch

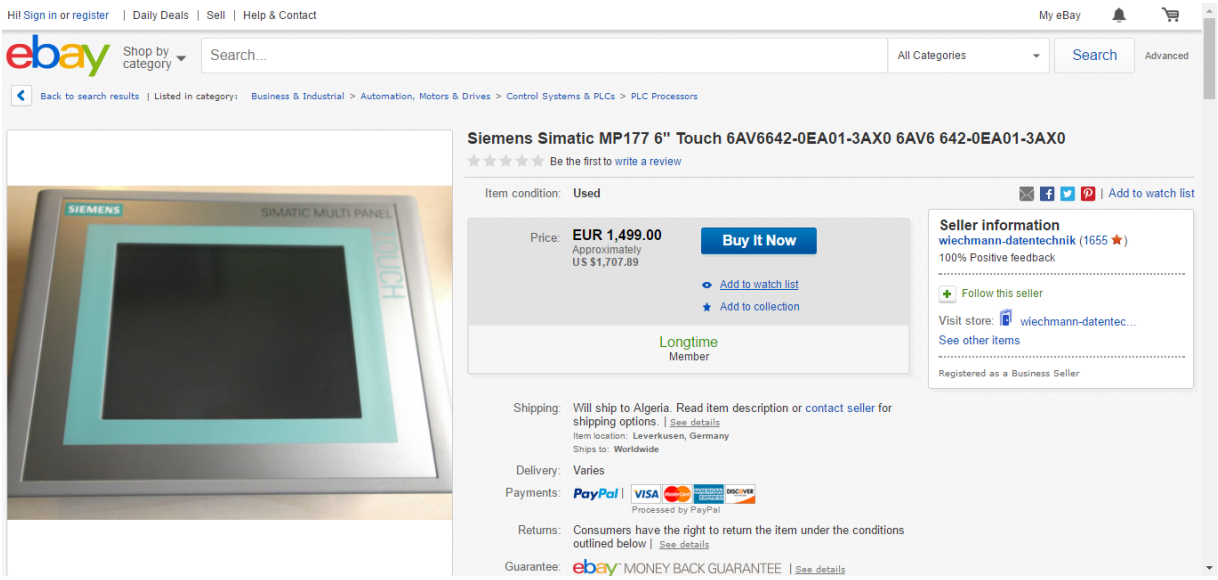

C.4 Arduino Uno Revolution 3 (R3)

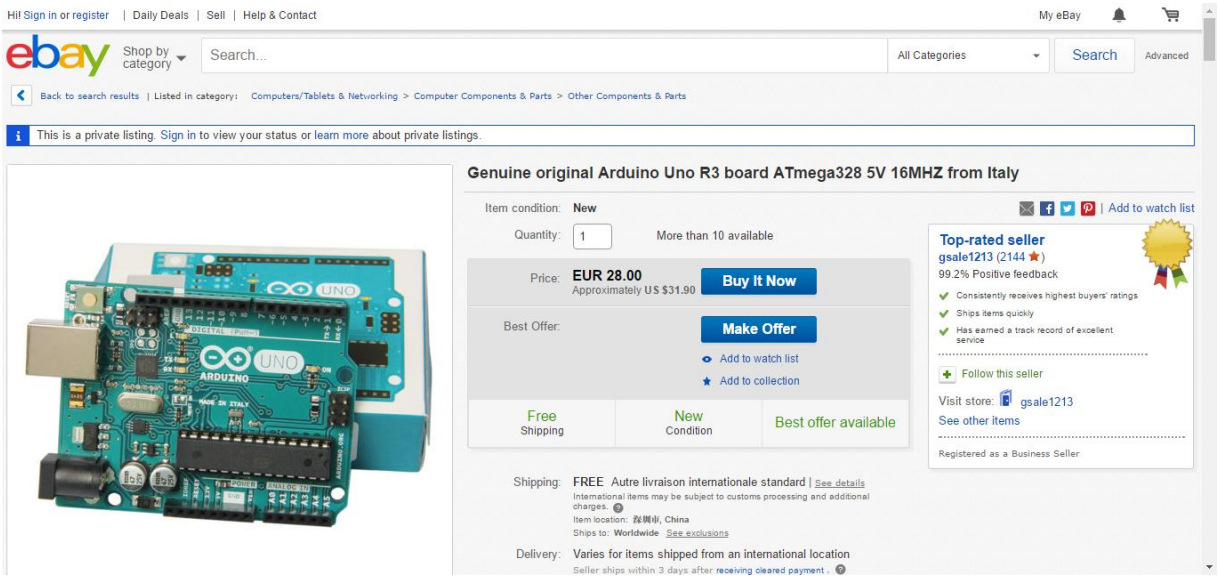

C.5 ENC28j60 Ethernet network card

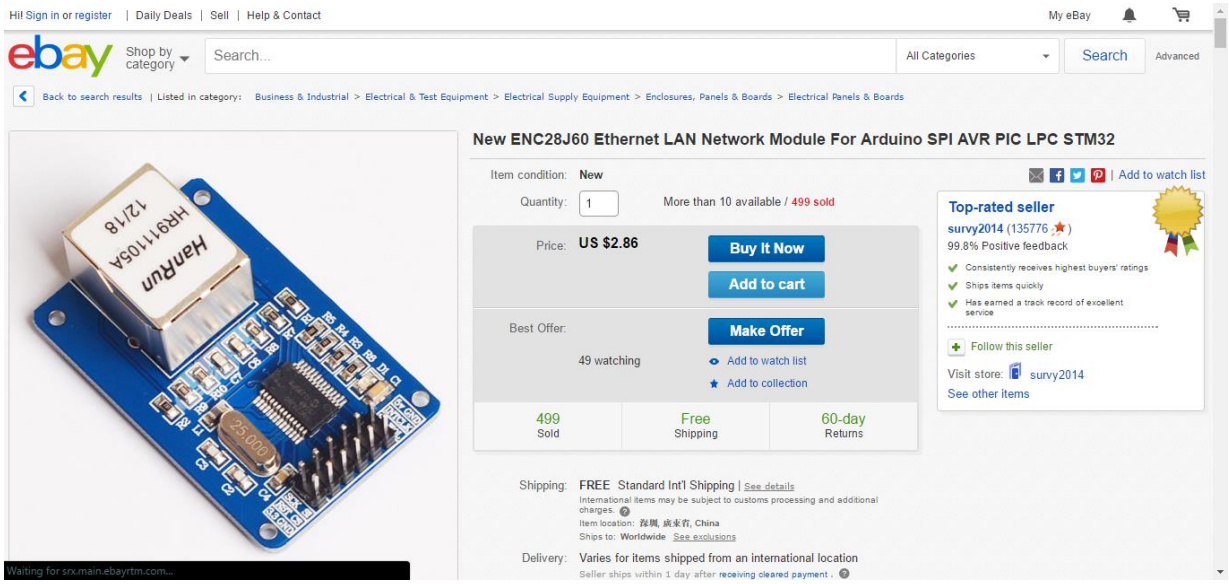

C.6 Contents of the CD attached with this thesis

The CD contents include the following items:

- Thesis in PDF and DOCX format.
- Siemensproject.zip - Compressed project source files of PROFINET simulation (Siemens Solution).
- myproject.zip - Compressed project source with Proteus simulation files (Arduino based Solution).
- Pictures of the project.

Bibliographic references

[1] Wikipedia. OSI Model [WWW document] http://en.wikipedia.org/wiki/OSI_model. (Accessed, 2016)

[2] IHS: Information Handling Services Company, United State, https://www.ihs.com (Accessed, 2016)

[3] Comer, D.E. "*Internetworking with TCP/IP" Vol I: Principles, Protocols, and Architecture*. 4th edition, 2000.

[4] Wikipedia. Twisted pair [WWW document] http://en.wikipedia.org/wiki/Twisted_pair. (Accessed, 2016)

[5] Wikipedia. Fiber Optical [WWW document] http://www.fiberoptics.info/articles/types_of_optical_fiber. (Accessed, 2016)

[6] B. A. Forouzan, "TCP/IP Protocol Suite", Fourth Edition, McGraw-Hill, 2010.

[7] Rostan,M. "Industrial Ethernet Technologies" [PDF document] (Accessed April, 2016). http://www.ethercat.org/download/documents/Industrial_Ethernet_Technologies.pdf

[8] John A. Kay; Rob A. Entzminger; David C. Mazur: "Industrial Ethernet Overview and Best Practices", *IEEE*, 2014.

[9] User Manual: Softing Protocol IP for Profinet v1.20, Softing Industrial Automation GmbH, 2014.

[10] PROFIBUS & PROFINET International. Profinet. http://www.profibus.com/technology/profinet/, 2016.

[11] "PROFINET IRT" Getting Started with the Siemens CPU 315 PLC, Altera

[12] "Siemens Simatic PROFINET" system description, Siemens (2015).

[13] Andrew Ginter, "Method and computer program product for monitoring an industrial network", Jul 17, 2007

[14] I. Muhammad, "Ethernet in Steer-by-wire Applications", Master's thesis, KTH Royal Institute of Technology, Stockholm, Sweden, 2011.

[15] "Standard for Local and Metropolitan Area Networks, virtual bridged local area networks". *IEEE Std, 2006*.

[16] Charles E. Spurgeon, "Practical Networking with Ethernet", International Thomson Computer Press, Boston, 1997.

[17] *IEEE, IEEE Std 802.3* - Part 3: "Carrier sense multiple access with collision detection (CSMA/CD) access method and physical layer specifications", 2005.

[18] David Stokes and Yoav Cohen. *MEF Overview and Carrier Ethernet Introduction*, 2009.

[19] Aref Meddeb. "Why Ethernet WAN Transport?" *IEEE Communications Magazine*, 2005.

[20] Taneli Taira. "A Signaling System for Ethernet Transport". Master's thesis, Aalto University School of Science and Technology, 2010.

[21] "Arduino". [WWW document] http://arduino.cc/ (accessed 2016).

ملـخـص:

في هذا البحث، أعطينا وصف وشرح التحكم من خلال شبكة إيثرنت في المجال الصناعي (بروفينت)، مع استخدام أحدث الأجهزة والبرامج المقدمة من قبل شركة سيمنس، و لأن هناك العديد من التطبيقات الصناعية لا تحتاج إلى حل معقد و لا التشخيص في الوقت الحقيقي، قمنا بإنشاء نضام تحكم عن طريق الشبكة مع اردوينو . وتعتمد الدراسة على التحكم في محرك (بداية مباشرة) عبر الإيثرنت الصناعية كمثال تطبيقي.

كلمـات مفتاحيـــة: الشبكات، الإيثرنت الصناعية، بروفينت، شبكة التحكم، ميكروكنترولر،اردوينو.

Résumé :

Dans cette recherche, nous avons donné une démonstration et explication de contrôle via le réseau Ethernet dans le domaine industriel (Profinet), avec l'aide de la dernière matériel et logiciel fourni par Siemens compagnie, car il y a de nombreuses applications industrielles ne nécessite pas la complexité de solution et des diagnostics en temps réel, nous avons construit une solution de réseau de contrôle avec une carte Arduino. L'étude est basée sur le contrôle moteur (démarrage direct) via Ethernet industriel comme un exemple d'application.

Mots Clés: Réseaux, Ethernet Industriel, Profinet, Réseau de contrôle, Microcontrôleurs, Arduino.

Abstract:

In this research we gave a demonstration and explanation of controlling through Ethernet network in industrial field (Profinet), with using the latest hardware and software provided by Siemens company, since there is many industrial application does not require complex solution and real time diagnostics, we constructed a controlling network solution with Arduino board. The study is based on controlling motor (direct start) via industrial Ethernet as an example application.

Key Words: Networks, Industrial Ethernet, Profinet, Control Network, Microcontrollers, Arduino.

View publication stats