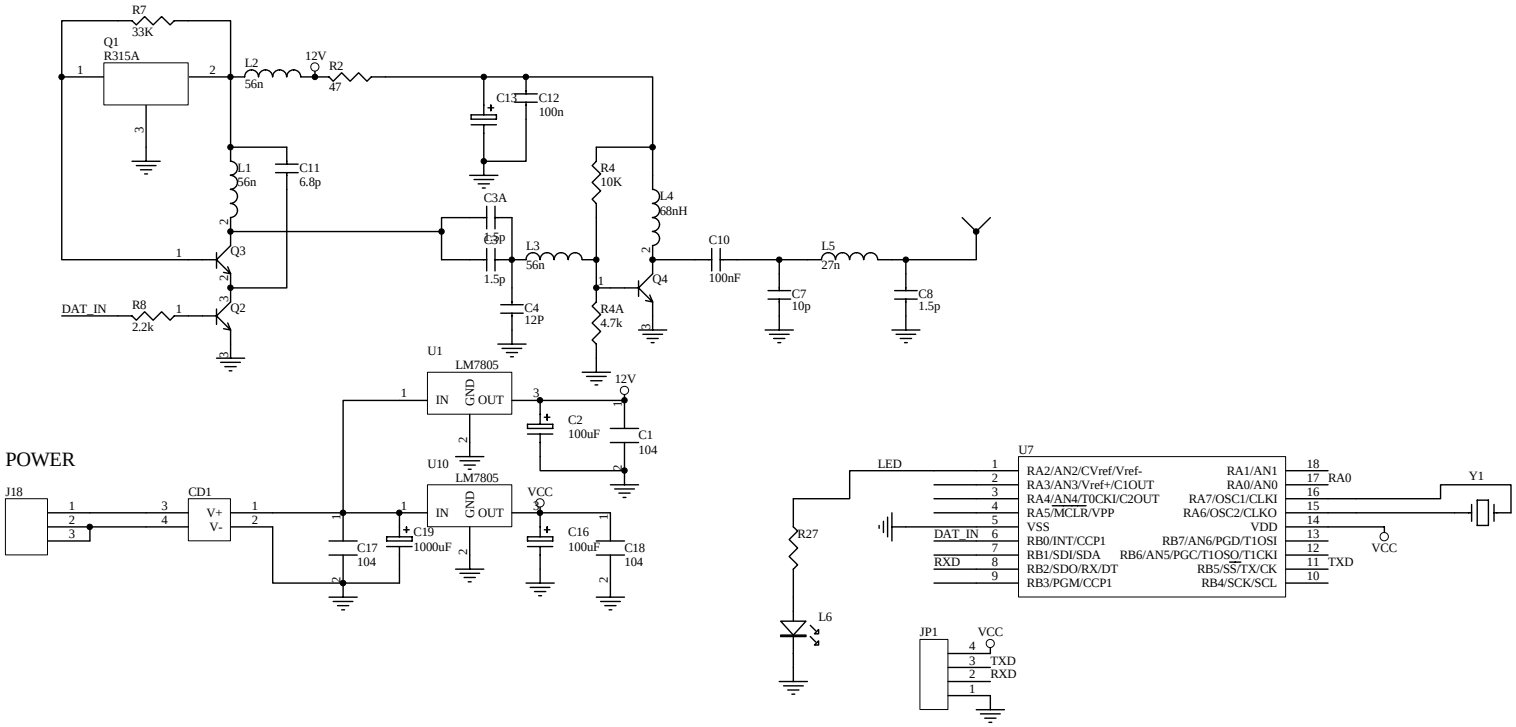

Title		
Size B	Number	Revision
Date: 6-Sep-2008	Sheet of	
File: D:\MinhHa\RF\tx_500MW\RF_500mW.ddb	Drawn By:	