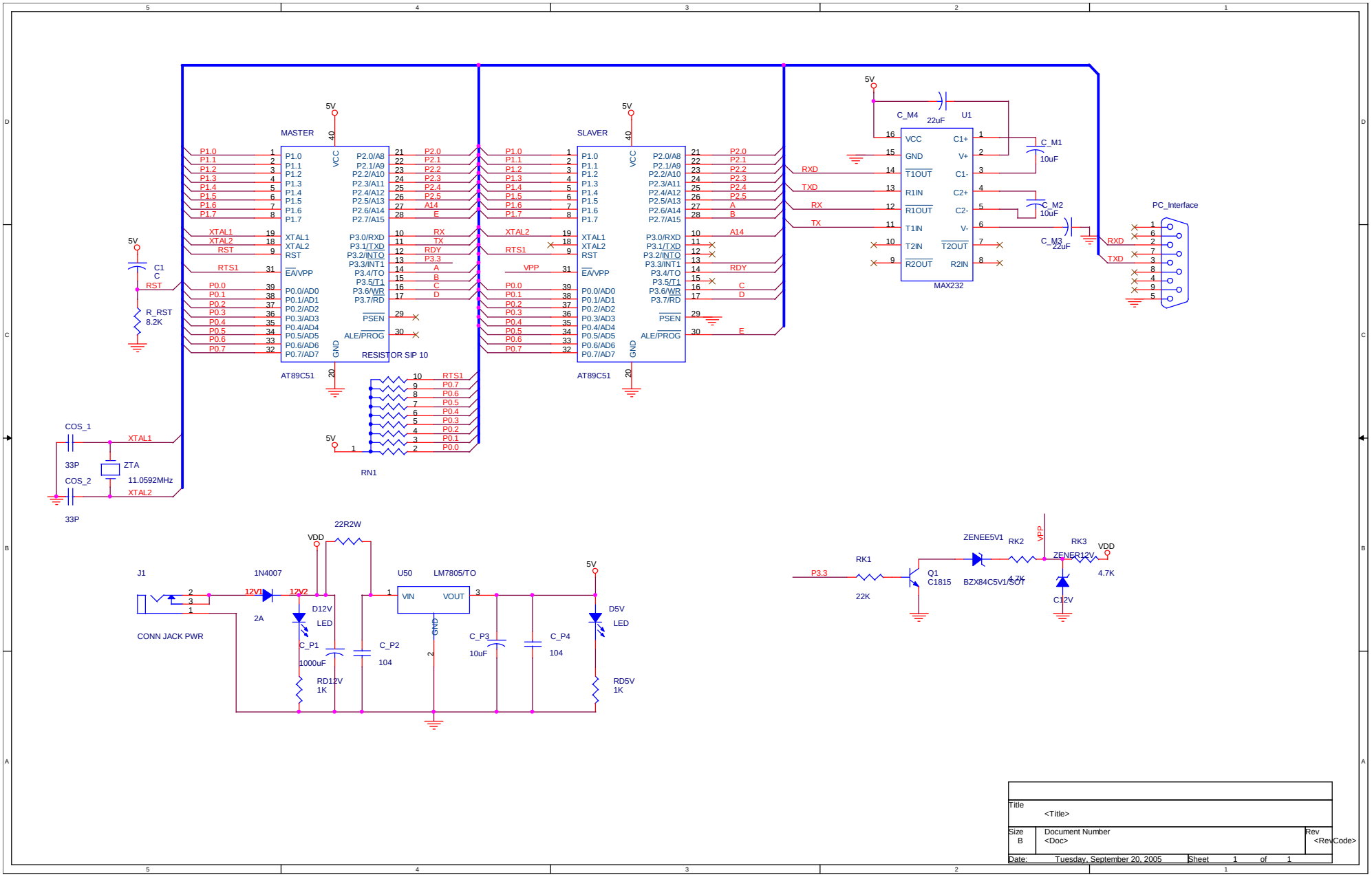

Title <Title>		
Size B	Document Number <Doc>	Rev <RevCode>
Date: Tuesday, September 20, 2005	Sheet 1 of 1	

PDF created with pdfFactory trial version www.pdffactory.com