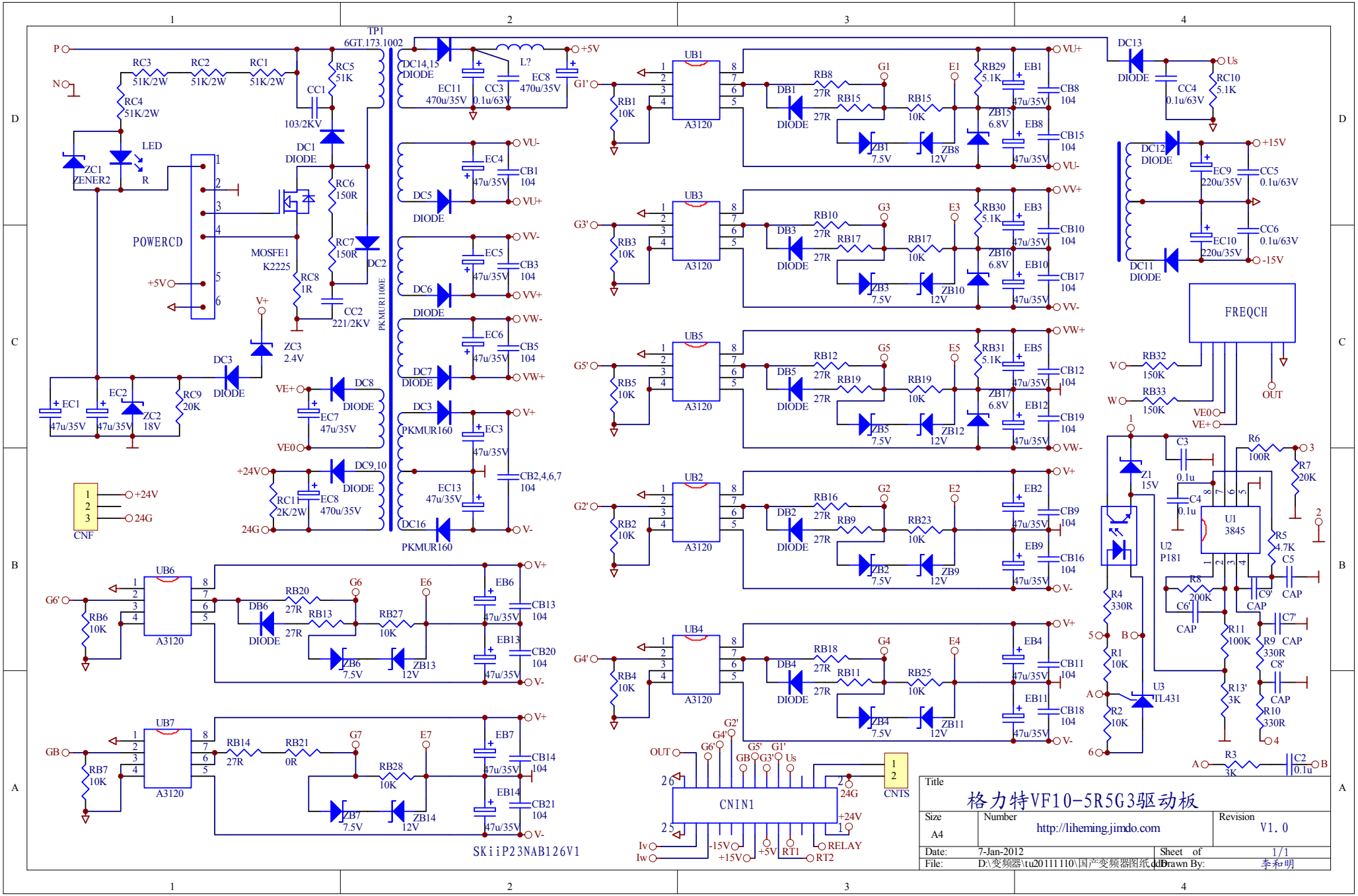
格力特VF10-5R5G3驱动板
Title
Size
A4
Number
http://liheming.jimdo.com
Revision
V1.0
Date: 7-Jan-2012
Sheet of 1/1
File: D:\变频器\tu20111110\国产变频器图纸.ddb
Drawn By: 李和明
TP1
6GT.173.1002
PKMUR100E
POWERCD
MOSFE1
K2225
SKiiP23NAB126V1
CNIN1
CNTS
CNF
FREQCH
A3120
PKMUR160
U1
3845
U2
P181
U3
TL431