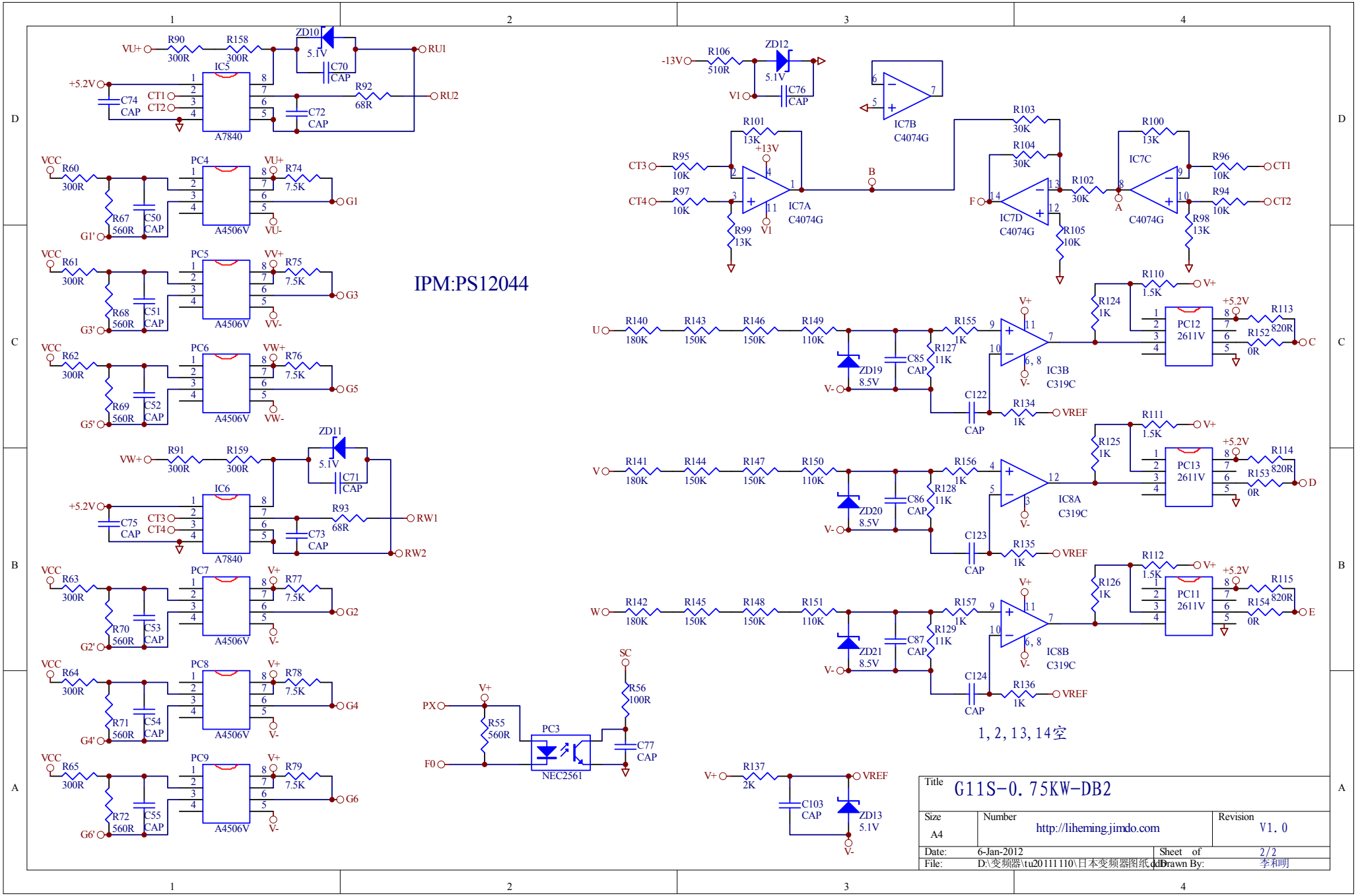
IPM:PS12044
VU+
R90 300R
R158 300R
ZD10 5.1V
C70 CAP
RU1
+5.2V
IC5
CT1
CT2
C74 CAP
R92 68R
RU2
C72 CAP
A7840
VCC
R60 300R
PC4
VU+
R74 7.5K
G1
R67 560R
C50 CAP
G1'
A4506V
VU-
R61 300R
PC5
VV+
R75 7.5K
G3
R68 560R
C51 CAP
G3'
VV-
R62 300R
PC6
VW+
R76 7.5K
G5
R69 560R
C52 CAP
G5'
VW-
VW+
R91 300R
R159 300R
ZD11 5.1V
C71 CAP
IC6
CT3
CT4
C75 CAP
R93 68R
RW1
C73 CAP
RW2
R63 300R
PC7
V+
R77 7.5K
G2
R70 560R
C53 CAP
G2'
R64 300R
PC8
R78 7.5K
G4
R71 560R
C54 CAP
G4'
R65 300R
PC9
R79 7.5K
G6
R72 560R
C55 CAP
G6'
-13V
R106 510R
ZD12 5.1V
V1
C76 CAP
IC7B C4074G
R101 13K
+13V
CT3
R95 10K
CT4
R97 10K
IC7A C4074G
R99 13K
B
R103 30K
R104 30K
F
IC7D C4074G
R105 10K
R102 30K
R100 13K
IC7C
A
C4074G
R96 10K
CT1
R94 10K
CT2
R98 13K
U
R140 180K
R143 150K
R146 150K
R149 110K
ZD19 8.5V
C85 CAP
R155 1K
R127 11K
IC3B C319C
C122 CAP
R134 1K
VREF
R124 1K
R110 1.5K
PC12 2611V
R113 820R
R152 0R
C
V
R141 180K
R144 150K
R147 150K
R150 110K
ZD20 8.5V
C86 CAP
R156 1K
R128 11K
IC8A C319C
C123 CAP
R135 1K
R125 1K
R111 1.5K
PC13 2611V
R114 820R
R153 0R
D
W
R142 180K
R145 150K
R148 150K
R151 110K
ZD21 8.5V
C87 CAP
R157 1K
R129 11K
IC8B C319C
C124 CAP
R136 1K
R126 1K
R112 1.5K
PC11 2611V
R115 820R
R154 0R
E
1,2,13,14空
PX
R55 560R
F0
PC3
NEC2561
SC
R56 100R
C77 CAP
R137 2K
C103 CAP
ZD13 5.1V
Title G11S-0.75KW-DB2
Size A4
Number http://liheming.jimdo.com
Revision V1.0
Date: 6-Jan-2012
Sheet of 2/2
File: D:\变频器\tu20111110\日本变频器图纸.ddb
Drawn By: 李和明