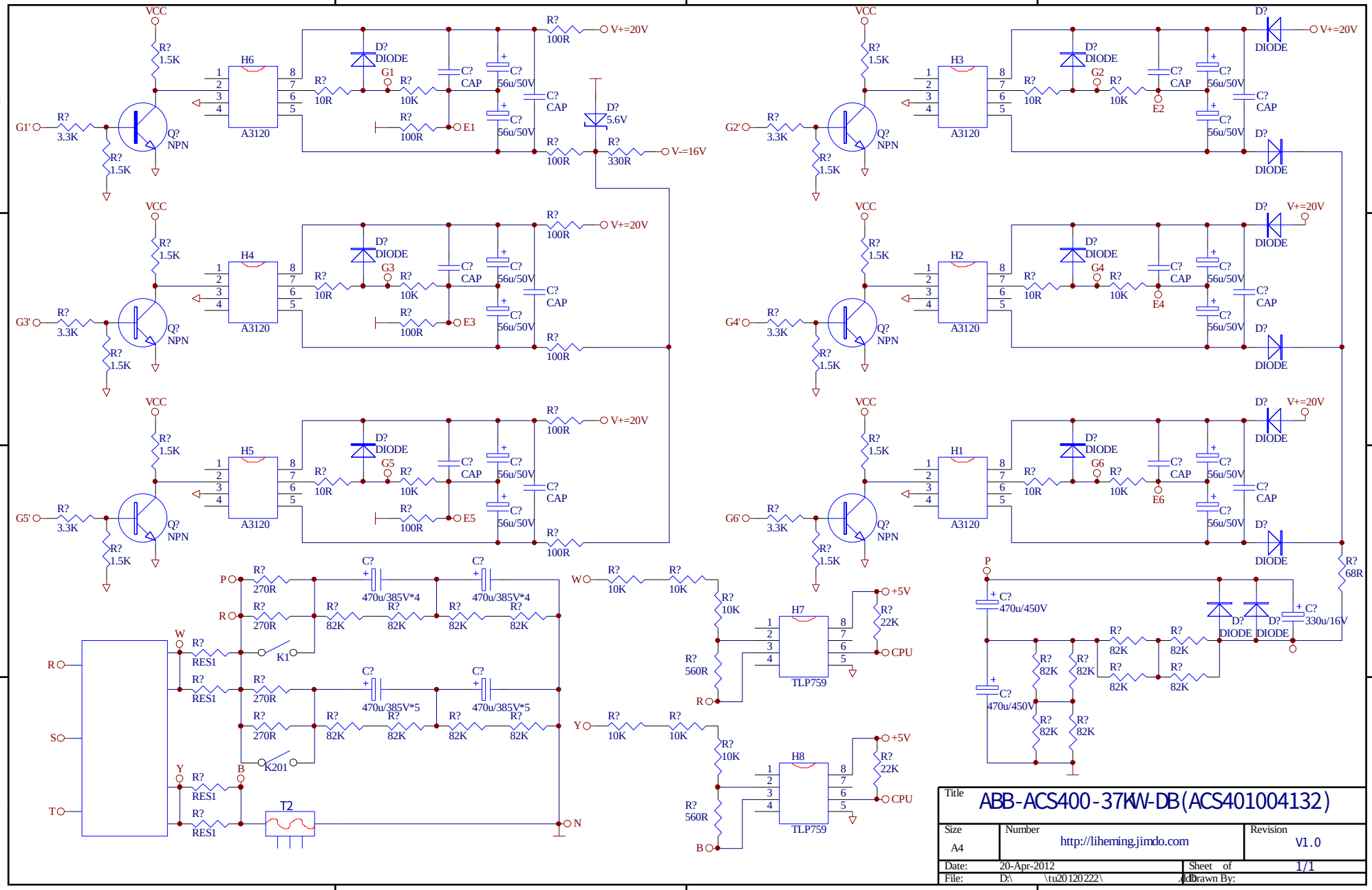
VCC
R? 1.5K
H6
A3120
G1'
R? 3.3K
Q? NPN
D? DIODE
G1
R? 10R
R? 10K
C? CAP
C? 56u/50V
R? 100R
V+=20V
E1
D? 5.6V
R? 330R
V-=16V
H3
G2
E2
H4
G3
E3
H2
G4
E4
H5
G5
E5
H1
G6
E6
DIODE
P
R
S
T
W
Y
B
N
RES1
K1
K201
T2
R? 270R
C? 470u/385V*4
C? 470u/385V*5
R? 82K
R? 10K
R? 560R
H7
H8
TLP759
+5V
R? 22K
CPU
C? 470u/450V
C? 330u/16V
R? 68R
Title
ABB-ACS400-37KW-DB(ACS401004132)
Size
A4
Number
http://liheming.jimdo.com
Revision
V1.0
Date: 20-Apr-2012
Sheet of 1/1
File: D:\ \tu20120222\
Drawn By: