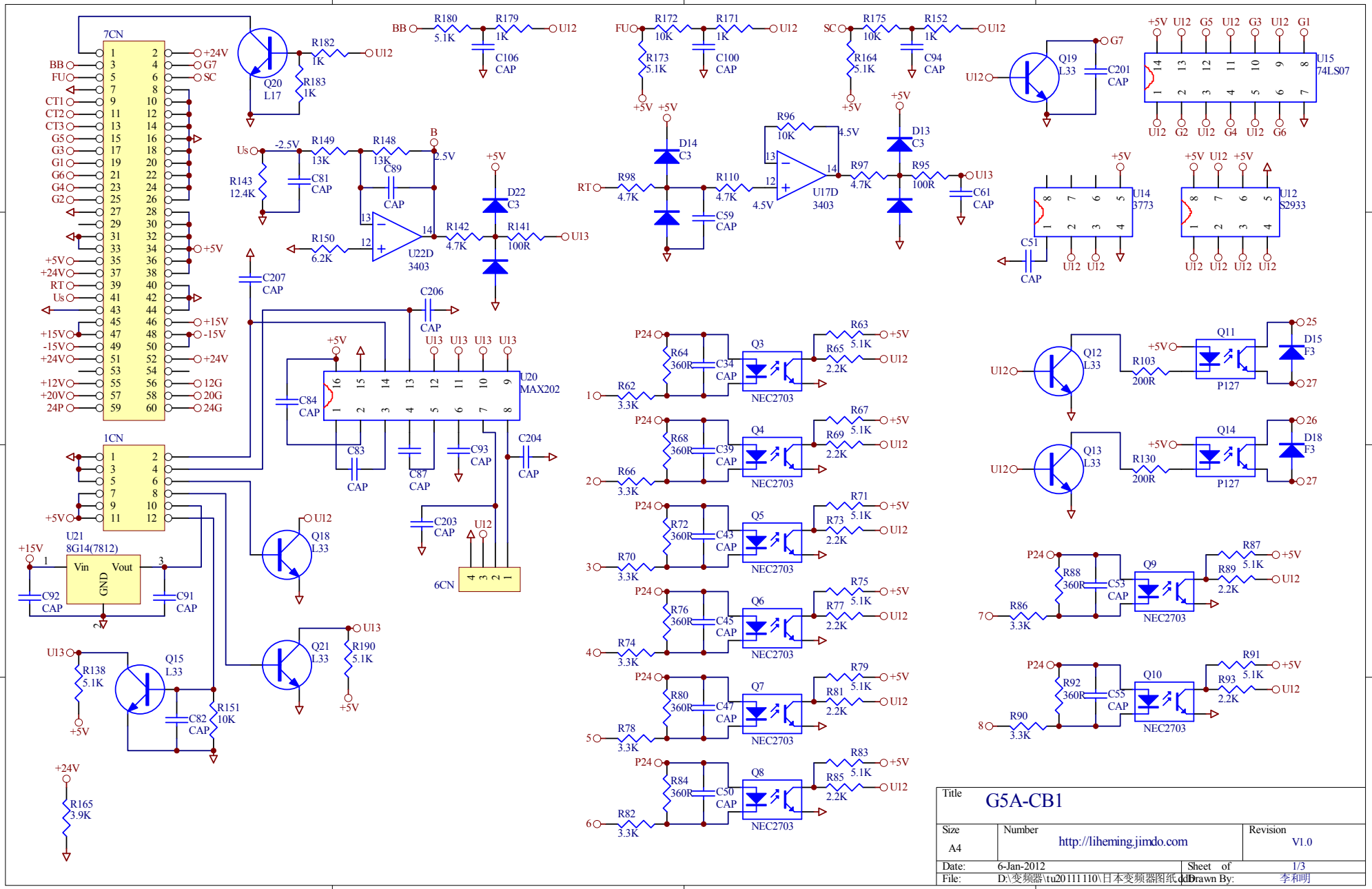
7CN
1CN
6CN
U20 MAX202
U21 8G14(7812)
U22D 3403
U17D 3403
U14 3773
U12 S2933
U15 74LS07
NEC2703
P127
Title G5A-CB1
Size A4
Number http://liheming.jimdo.com
Revision V1.0
Date: 6-Jan-2012
Sheet of 1/3
File: D:\变频器\tu20111110\日本变频器图纸.ddb
Drawn By: 李和明