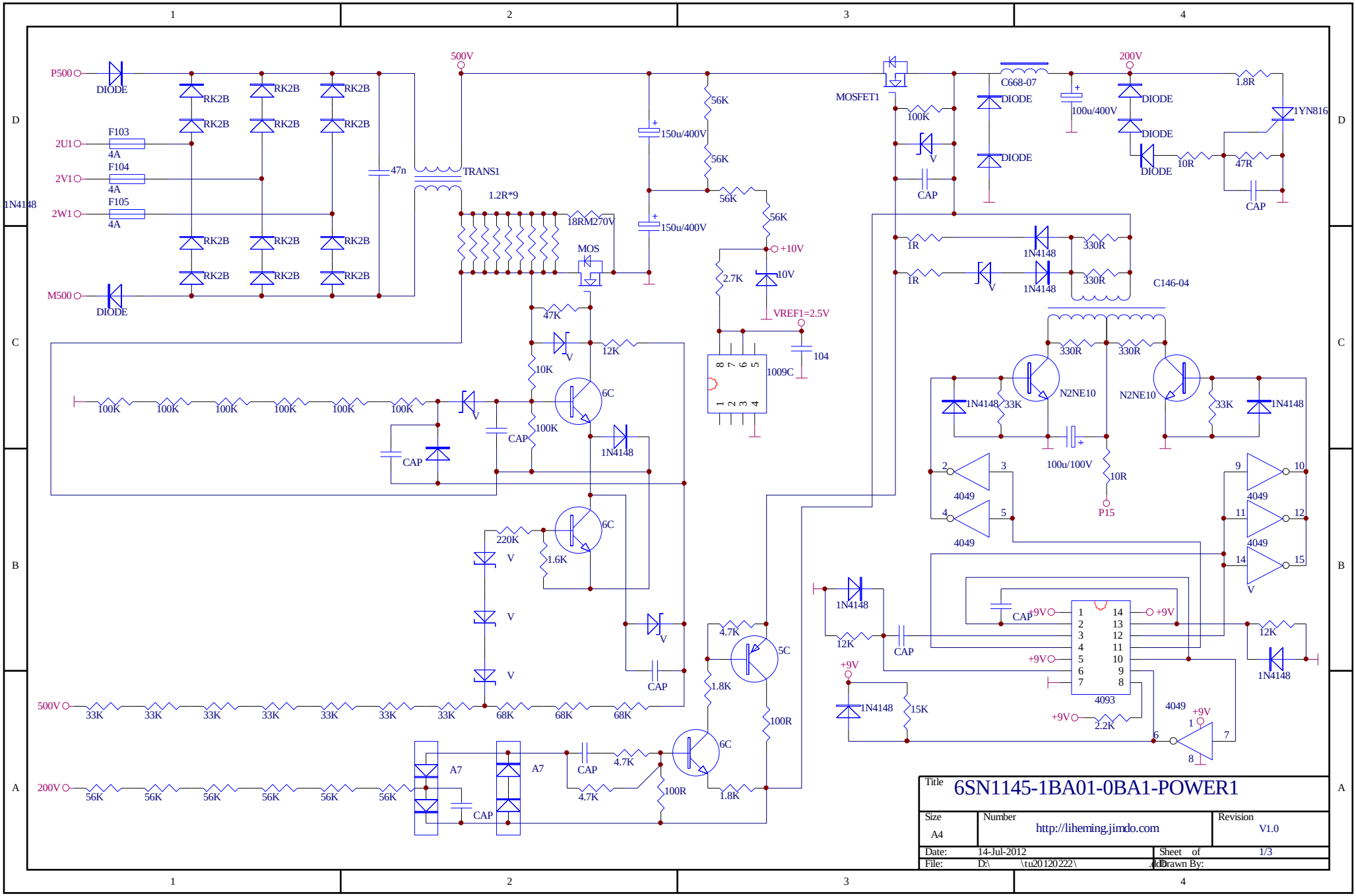

Title	6SN1145-1BA01-0BA1-POWER1	
Size A4	Number http://liheming.jimdo.com	Revision V1.0
Date: 14-Jul-2012	Sheet of 1/3	
File: D:\ \tu20120222\	Drawn By:	