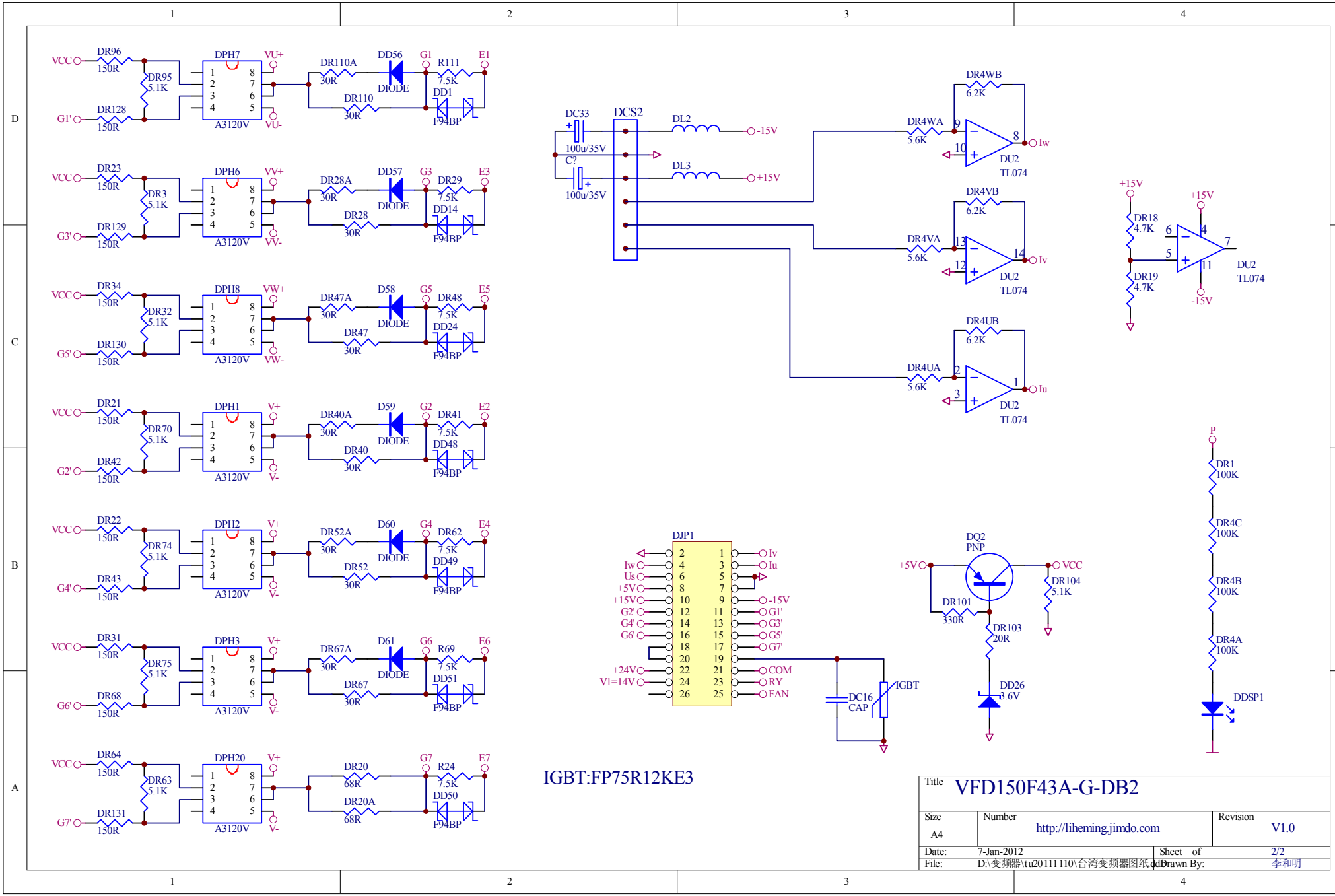

IGBT:FP75R12KE3

Title	VFD150F43A-G-DB2	
Size A4	Number http://liheming.jimdo.com	Revision V1.0
Date: 7-Jan-2012	Sheet of	2/2
File: D:\变频器\tu20111110\台湾变频器图纸.ddb	Drawn By:	李和明