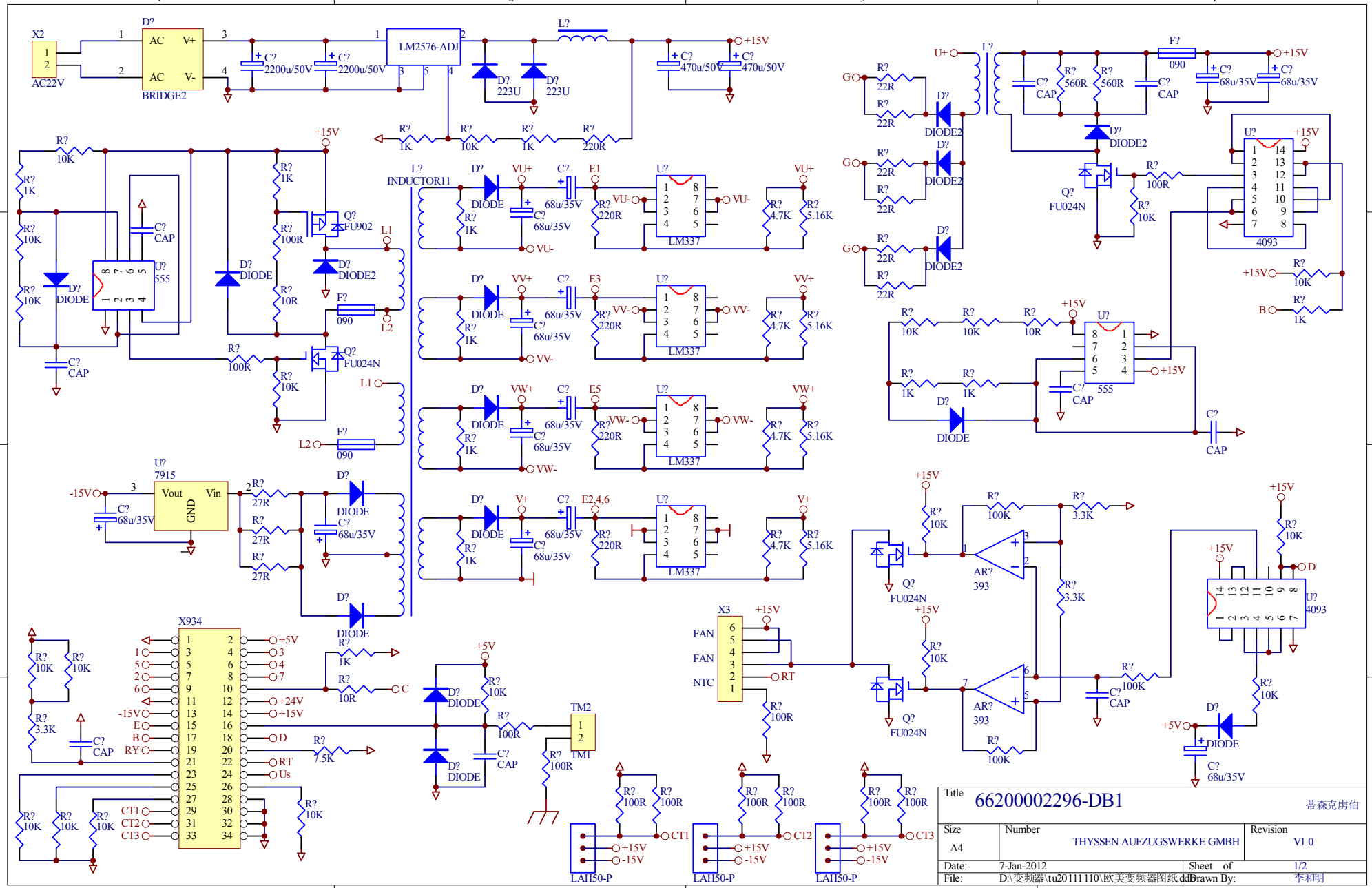
X2
AC22V
D?
BRIDGE2
AC
V+
AC
V-
C?
2200u/50V
LM2576-ADJ
L?
D?
223U
C?
470u/50V
+15V
R?
1K
10K
220R
L?
INDUCTOR11
DIODE
VU+
VU-
VV+
VV-
VW+
VW-
V+
C?
68u/35V
E1
E3
E5
E2,4,6
U?
LM337
R?
4.7K
5.16K
U?
555
C?
CAP
R?
10K
R?
1K
R?
100R
R?
10R
Q?
FU902
Q?
FU024N
D?
DIODE2
F?
090
L1
L2
U?
7915
Vout
Vin
GND
-15V
R?
27R
X934
+5V
+24V
+15V
-15V
D
RT
Us
CT1
CT2
CT3
R?
3.3K
R?
7.5K
TM2
TM1
X3
FAN
NTC
RT
LAH50-P
U+
G
B
F?
090
R?
560R
R?
22R
4093
AR?
393
Title
66200002296-DB1
蒂森克虏伯
Size
A4
Number
THYSSEN AUFZUGSWERKE GMBH
Revision
V1.0
Date:
7-Jan-2012
Sheet of
1/2
File:
D:\变频器\tu20111110\欧美变频器图纸.ddb
Drawn By:
李和明