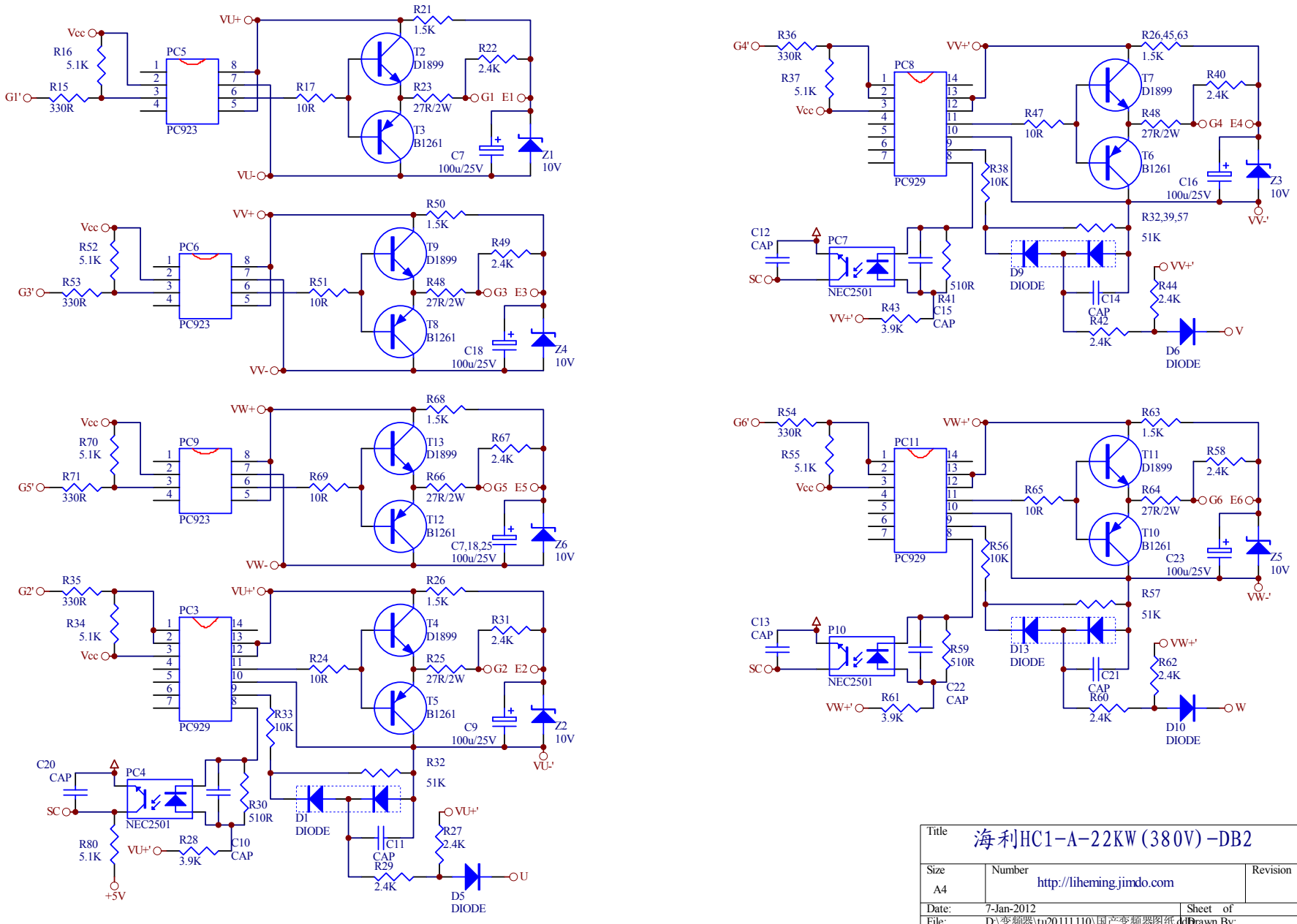

Title	海利HC1-A-22KW(380V)-DB2	
Size A4	Number http://liheming.jimdo.com	Revision V1.0
Date: 7-Jan-2012	Sheet of	2/2
File: D:\变频器\tu20111110\国产变频器图纸.ddb	Drawn By:	李和明