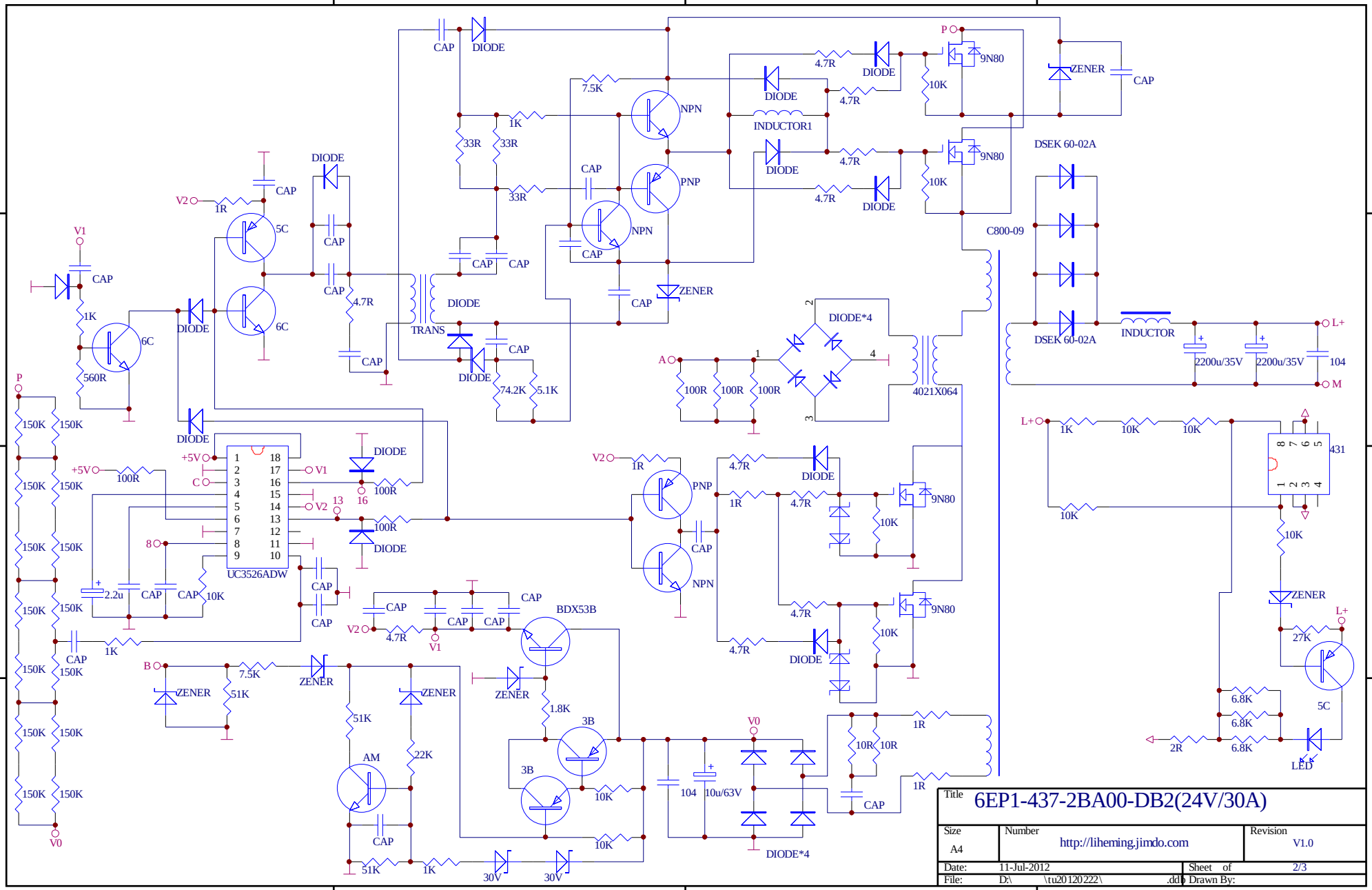
Title
6EP1-437-2BA00-DB2(24V/30A)
Size
A4
Number
http://liheming.jimdo.com
Revision
V1.0
Date: 11-Jul-2012
Sheet of 2/3
File: D:\ \tu20120222\ .ddb
Drawn By:
UC3526ADW
TRANS
INDUCTOR1
C800-09
DSEK 60-02A
INDUCTOR
4021X064
BDX53B
431
LED