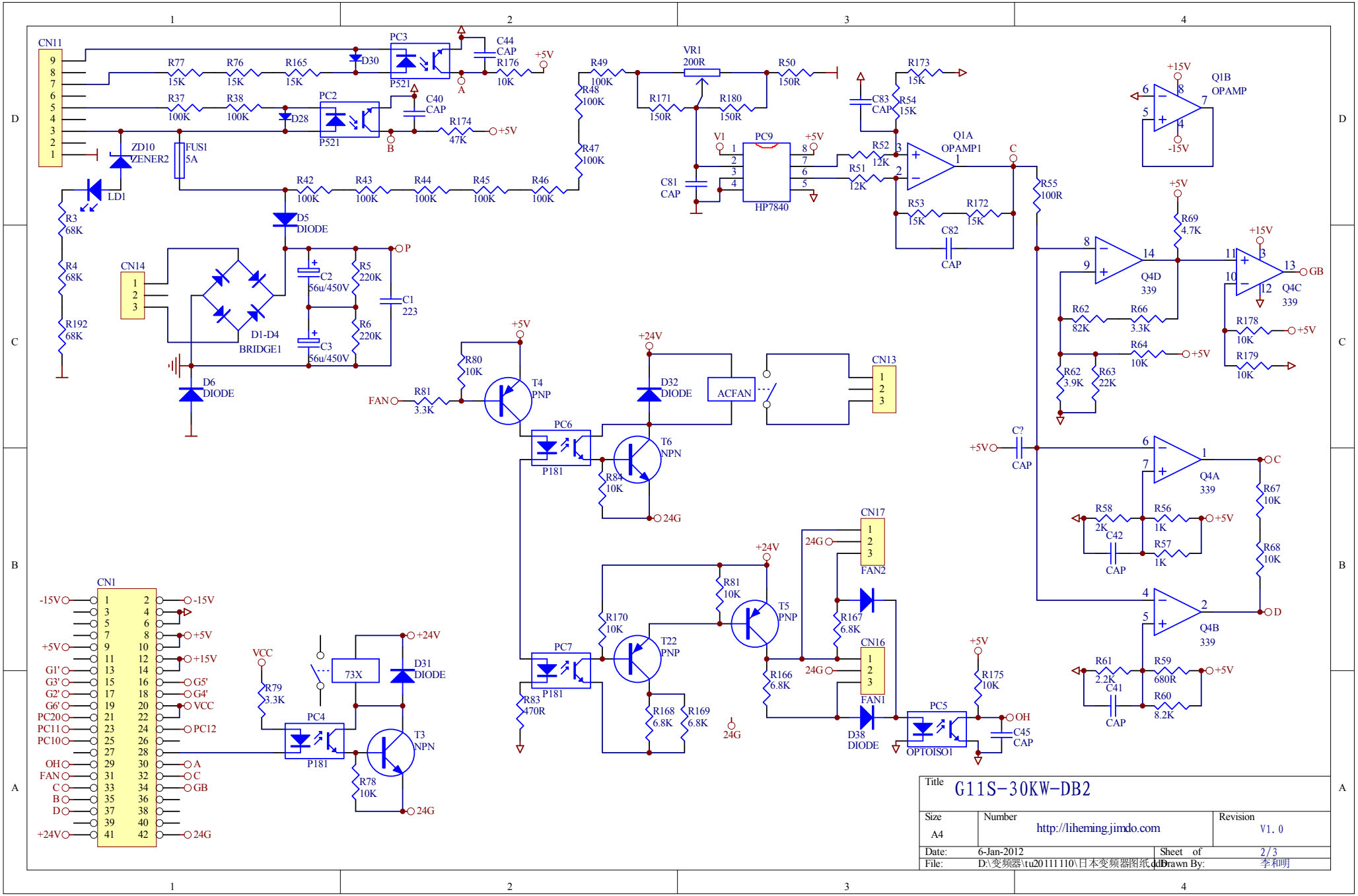
CN11
R77 15K
R76 15K
R165 15K
D30
PC3
P521
C44 CAP
R176 10K
+5V
R37 100K
R38 100K
D28
PC2
P521
C40 CAP
R174 47K
ZD10 ZENER2
FUS1 5A
LD1
R3 68K
R4 68K
R192 68K
R42 100K
R43 100K
R44 100K
R45 100K
R46 100K
R49 100K
R48 100K
R47 100K
VR1 200R
R171 150R
R180 150R
R50 150R
V1
PC9
HP7840
C81 CAP
R173 15K
C83 CAP
R54 15K
R52 12K
R51 12K
Q1A OPAMP1
R53 15K
R172 15K
C82 CAP
R55 100R
Q1B OPAMP
+15V
-15V
R69 4.7K
Q4D 339
R62 82K
R66 3.3K
R64 10K
R62 3.9K
R63 22K
Q4C 339
GB
R178 10K
R179 10K
CN14
D5 DIODE
C2 56u/450V
C3 56u/450V
R5 220K
R6 220K
C1 223
D1-D4 BRIDGE1
D6 DIODE
R80 10K
T4 PNP
FAN
R81 3.3K
PC6
P181
T6 NPN
R84 10K
24G
D32 DIODE
ACFAN
CN13
C?
CAP
Q4A 339
R58 2K
C42 CAP
R56 1K
R57 1K
R67 10K
R68 10K
Q4B 339
R61 2.2K
C41 CAP
R59 680R
R60 8.2K
CN17
FAN2
R167 6.8K
CN16
FAN1
D38 DIODE
R166 6.8K
T5 PNP
R170 10K
T22 PNP
R168 6.8K
R169 6.8K
R83 470R
PC7
PC5
OPTOISO1
R175 10K
OH
C45 CAP
CN1
-15V
+5V
+15V
G1'
G3'
G2'
G6'
PC20
PC11
PC10
OH
FAN
C
B
D
+24V
G5'
G4'
VCC
PC12
A
GB
VCC
R79 3.3K
PC4
P181
73X
D31 DIODE
T3 NPN
R78 10K
Title G11S-30KW-DB2
Size A4
Number http://liheming.jimdo.com
Revision V1.0
Date: 6-Jan-2012
Sheet of 2/3
File: D:\变频器\tu20111110\日本变频器图纸.ddb
Drawn By: 李和明