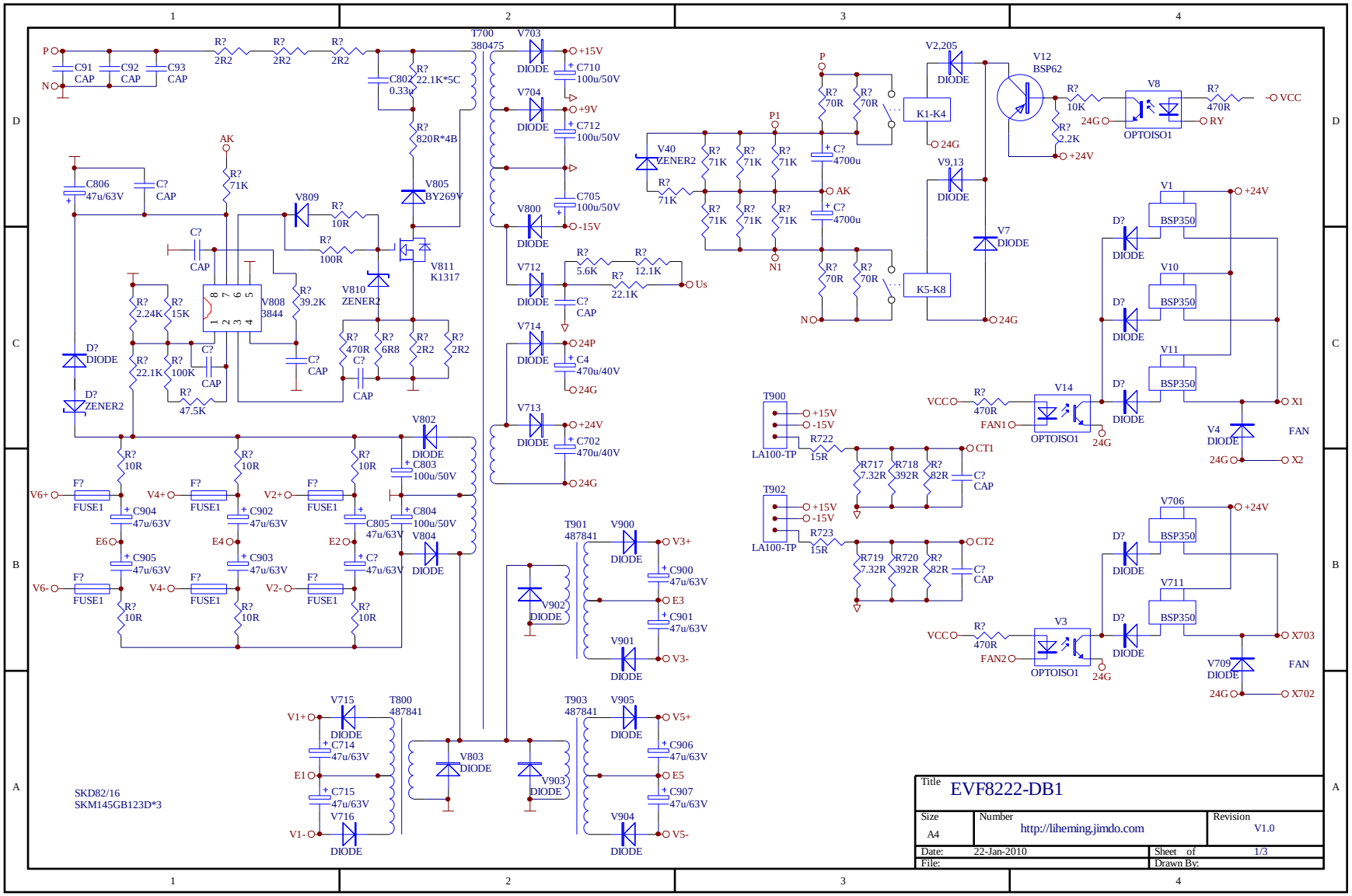

Title	EVF8222-DB1	
Size A4	Number http://liheming.jimdo.com	Revision V1.0
Date: 22-Jan-2010		Sheet of 1/3
File:		Drawn By: