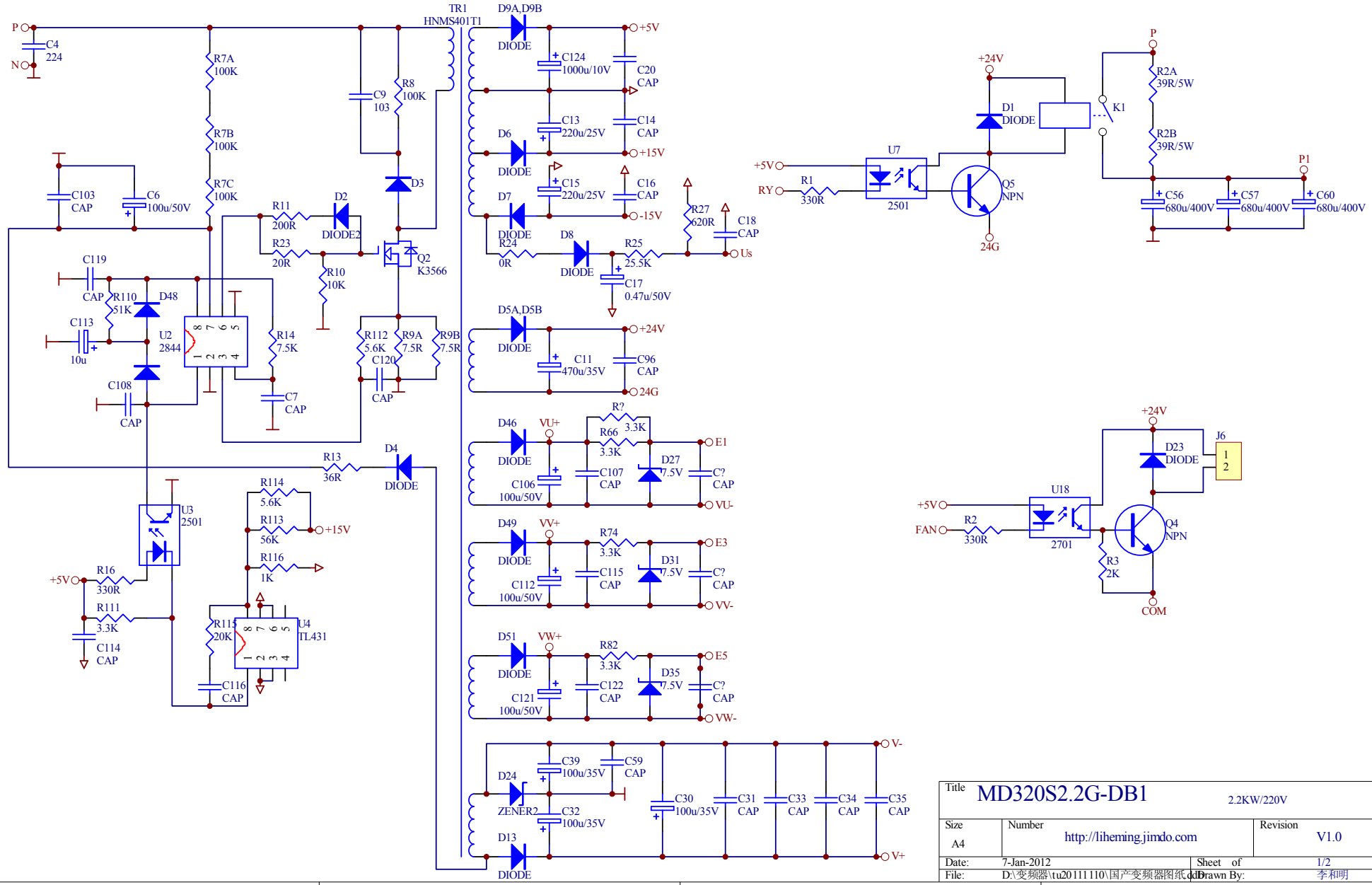

Title	MD320S2.2G-DB1	2.2KW/220V	
Size A4	Number http://liheming.jimdo.com		Revision V1.0
Date: 7-Jan-2012		Sheet of	1/2
File: D:\变频器\tu20111110\国产变频器图纸.ddb		Drawn By:	李和明