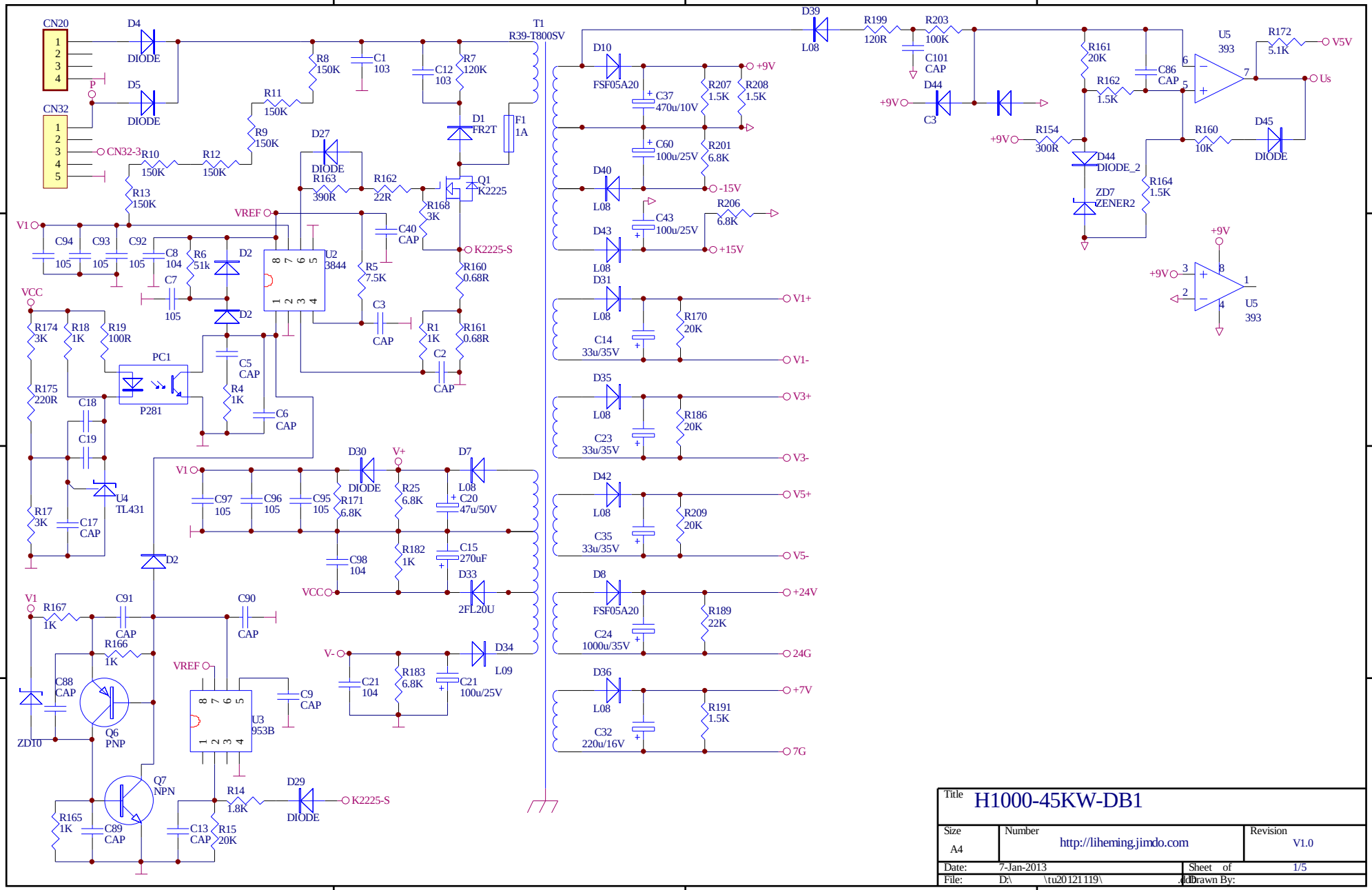

Title	H1000-45KW-DB1	
Size A4	Number http://liheming.jimdo.com	Revision V1.0
Date: 7-Jan-2013	Sheet of 1/5	
File: D:\ \tu20121119\	Drawn By:	