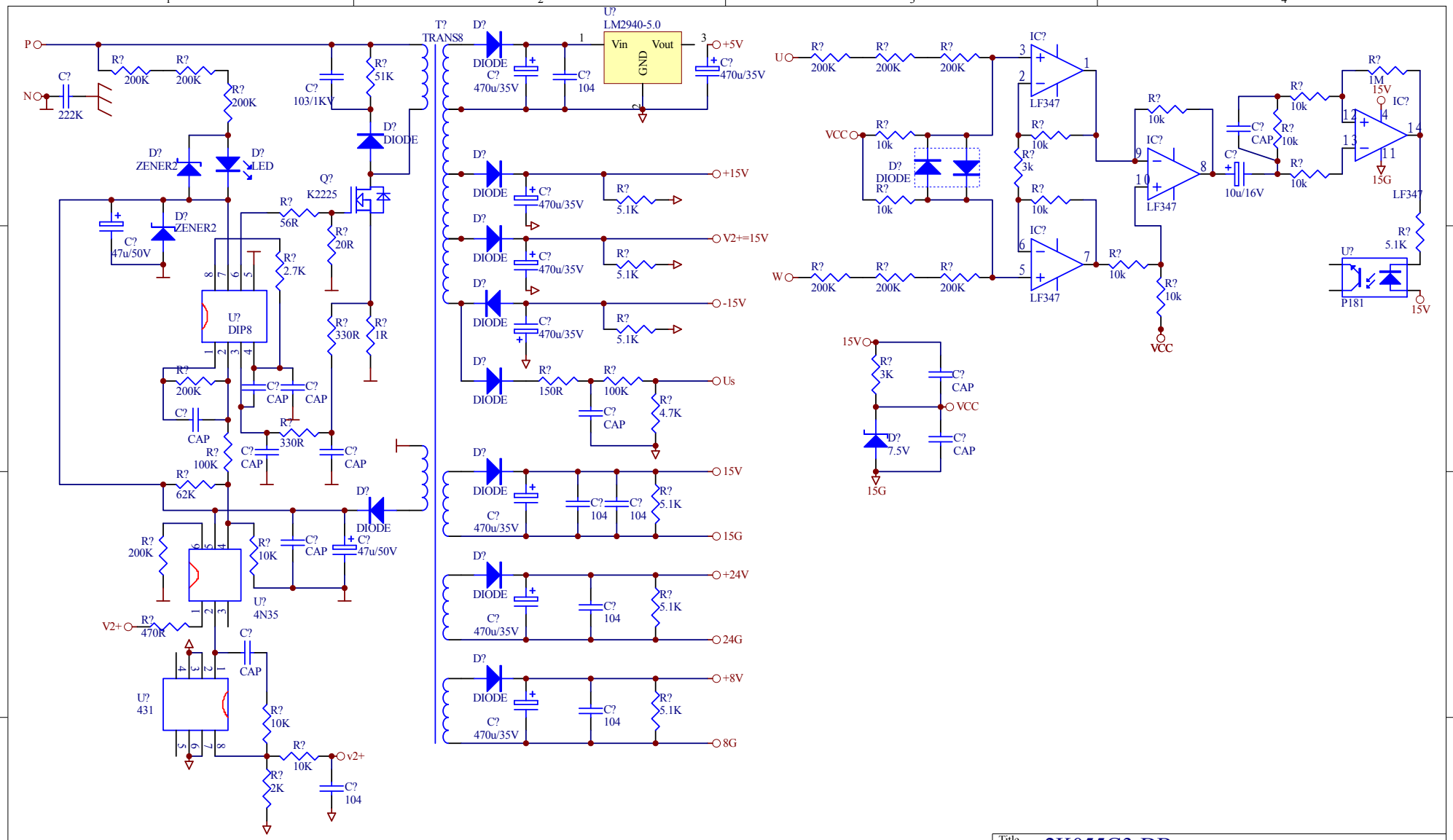

Title	2K055G3-DB		
Size A4	Number http://liheming.jimdo.com		Revision V1.0
Date: 7-Jan-2012		Sheet of	1/1
File: D:\变频器\tu20111110\国产变频器图纸.ddb		Drawn By:	李和明