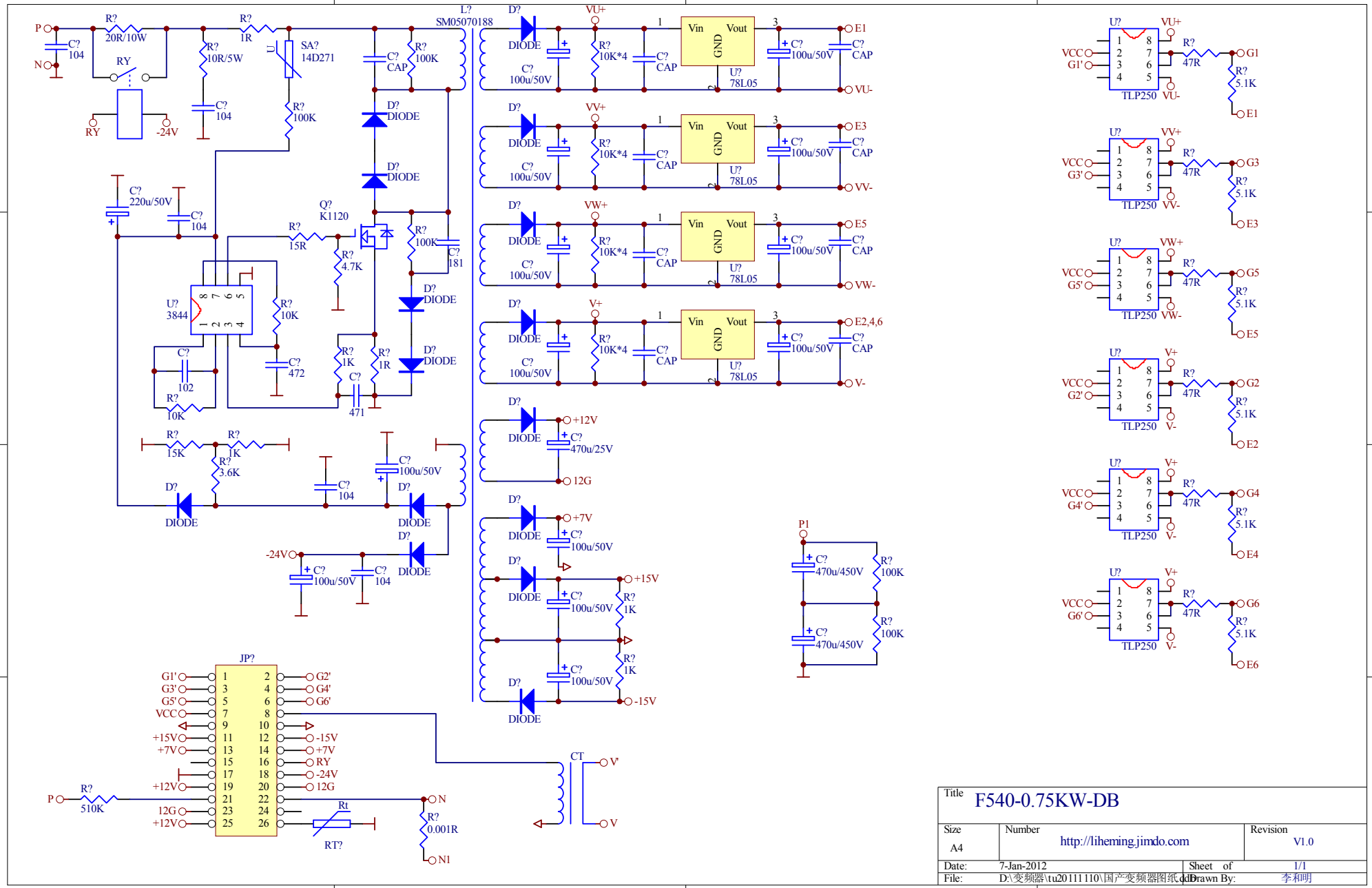

Title	F540-0.75KW-DB	
Size A4	Number http://liheming.jimdo.com	Revision V1.0
Date: 7-Jan-2012	Sheet of 1/1	
File: D:\变频器\tu20111110\国产变频器图纸.ddb	Drawn By: 李和明	