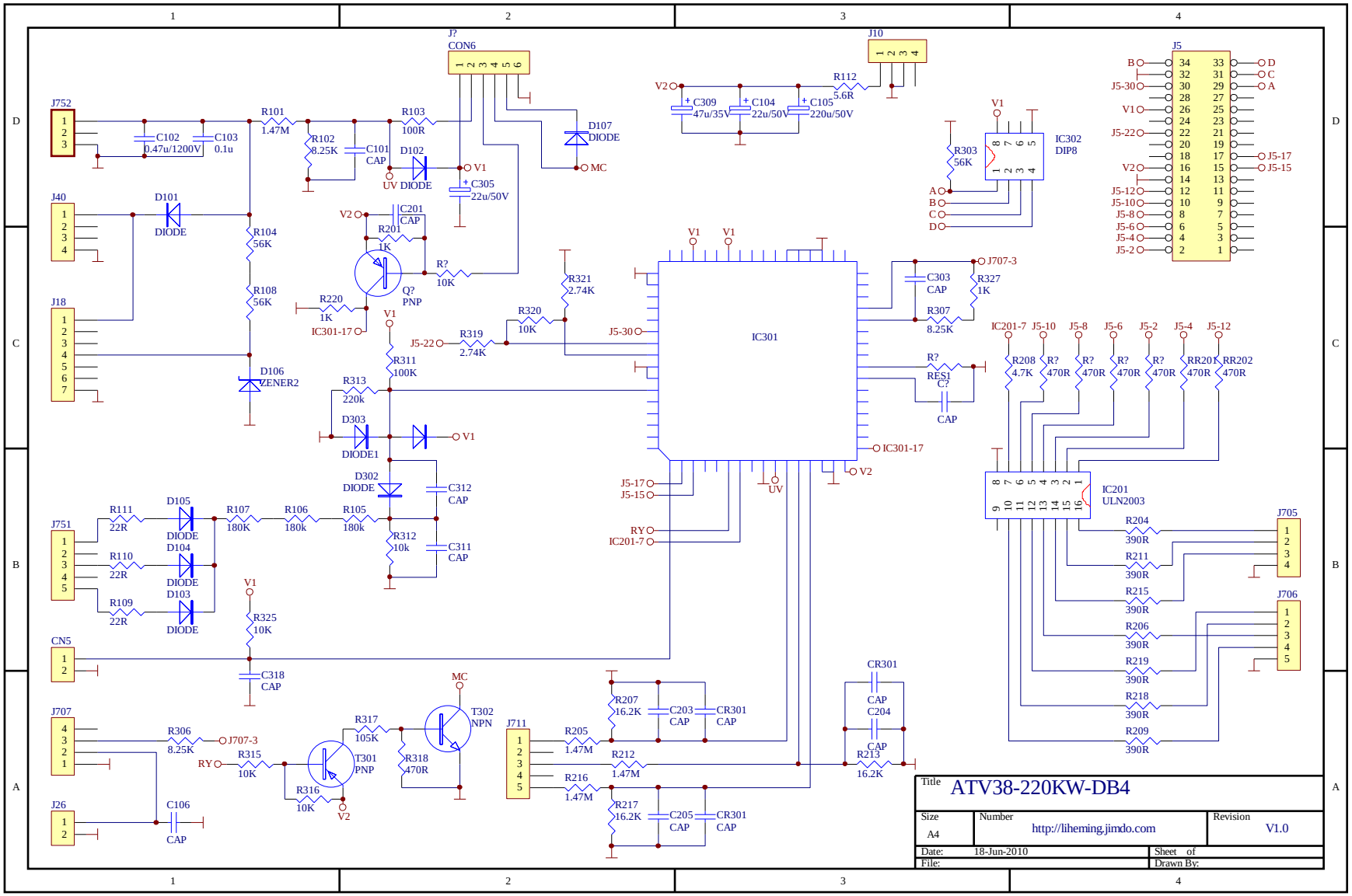
J?
CON6
J10
J5
J752
J40
J18
J751
CN5
J707
J26
J711
J705
J706
IC301
IC302
DIP8
IC201
ULN2003
Q?
PNP
T301
PNP
T302
NPN
D101
DIODE
D102
DIODE
D103
DIODE
D104
DIODE
D105
DIODE
D106
ZENER2
D107
DIODE
D302
DIODE
D303
DIODE1
R101
1.47M
R102
8.25K
R103
100R
R104
56K
R108
56K
R111
22R
R110
22R
R109
22R
R107
180K
R106
180k
R105
180k
R312
10k
R311
100K
R313
220k
R325
10K
R306
8.25K
R315
10K
R316
10K
R317
105K
R318
470R
R320
10K
R321
2.74K
R319
2.74K
R220
1K
R201
1K
R?
10K
R303
56K
R112
5.6R
R327
1K
R307
8.25K
R?
RES1
R208
4.7K
R204
390R
R211
390R
R215
390R
R206
390R
R219
390R
R218
390R
R209
390R
R205
1.47M
R212
1.47M
R216
1.47M
R207
16.2K
R217
16.2K
R213
16.2K
C102
0.47u/1200V
C103
0.1u
C101
CAP
C201
CAP
C305
22u/50V
C309
47u/35V
C104
22u/50V
C105
220u/50V
C303
CAP
C?
CAP
C312
CAP
C311
CAP
C318
CAP
C106
CAP
C203
CAP
C205
CAP
CR301
CAP
C204
CAP
UV
MC
RY
IC301-17
IC201-7
J707-3
J5-30
J5-22
J5-17
J5-15
V1
V2
Title
ATV38-220KW-DB4
Size
A4
Number
http://liheming.jimdo.com
Revision
V1.0
Date:
18-Jun-2010
Sheet of
File:
Drawn By: