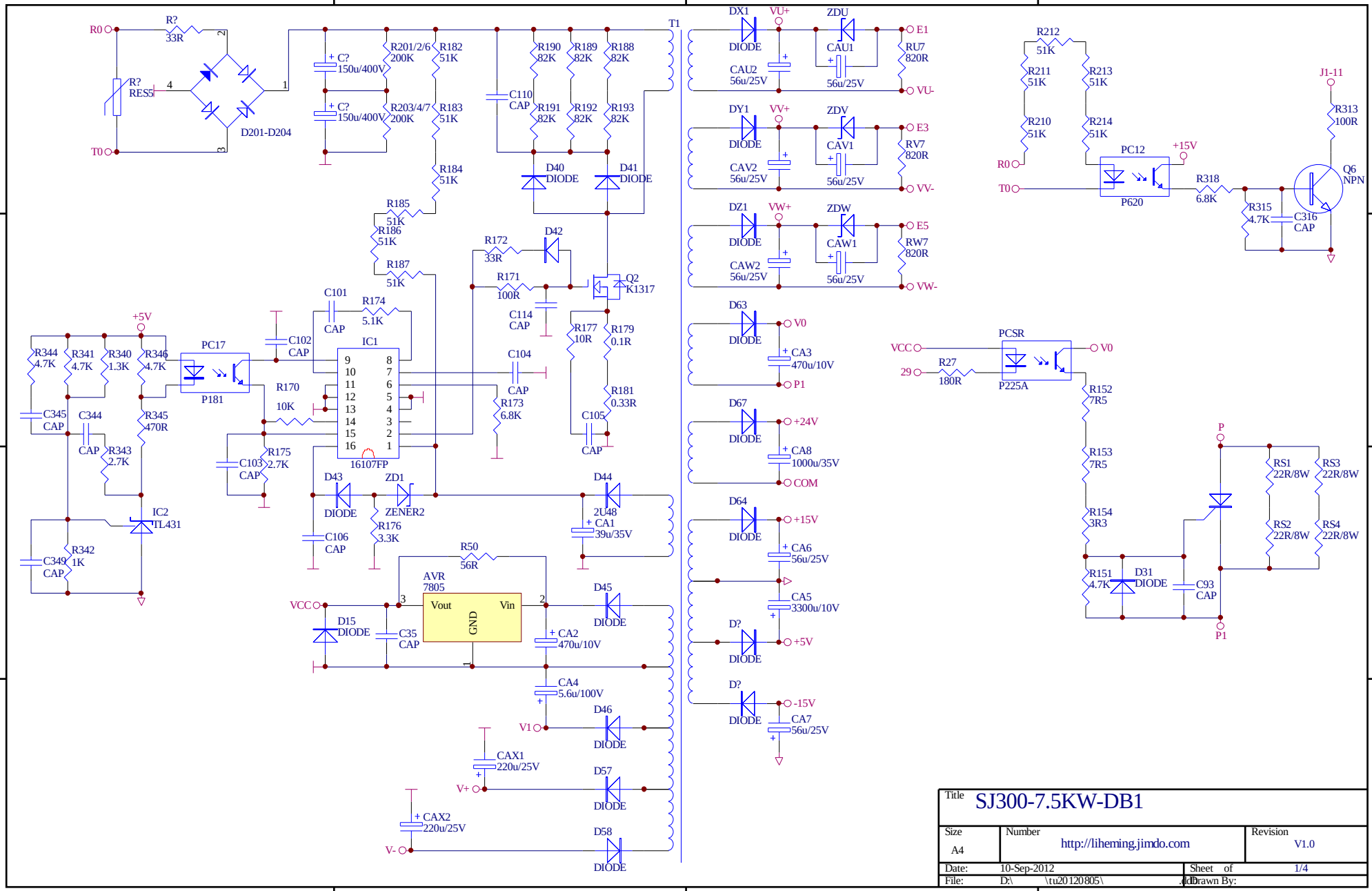

Title	SJ300-7.5KW-DB1	
Size A4	Number http://liheming.jimdo.com	Revision V1.0
Date: 10-Sep-2012	Sheet of 1/4	
File: D:\ \tu20120805\	Drawn By:	