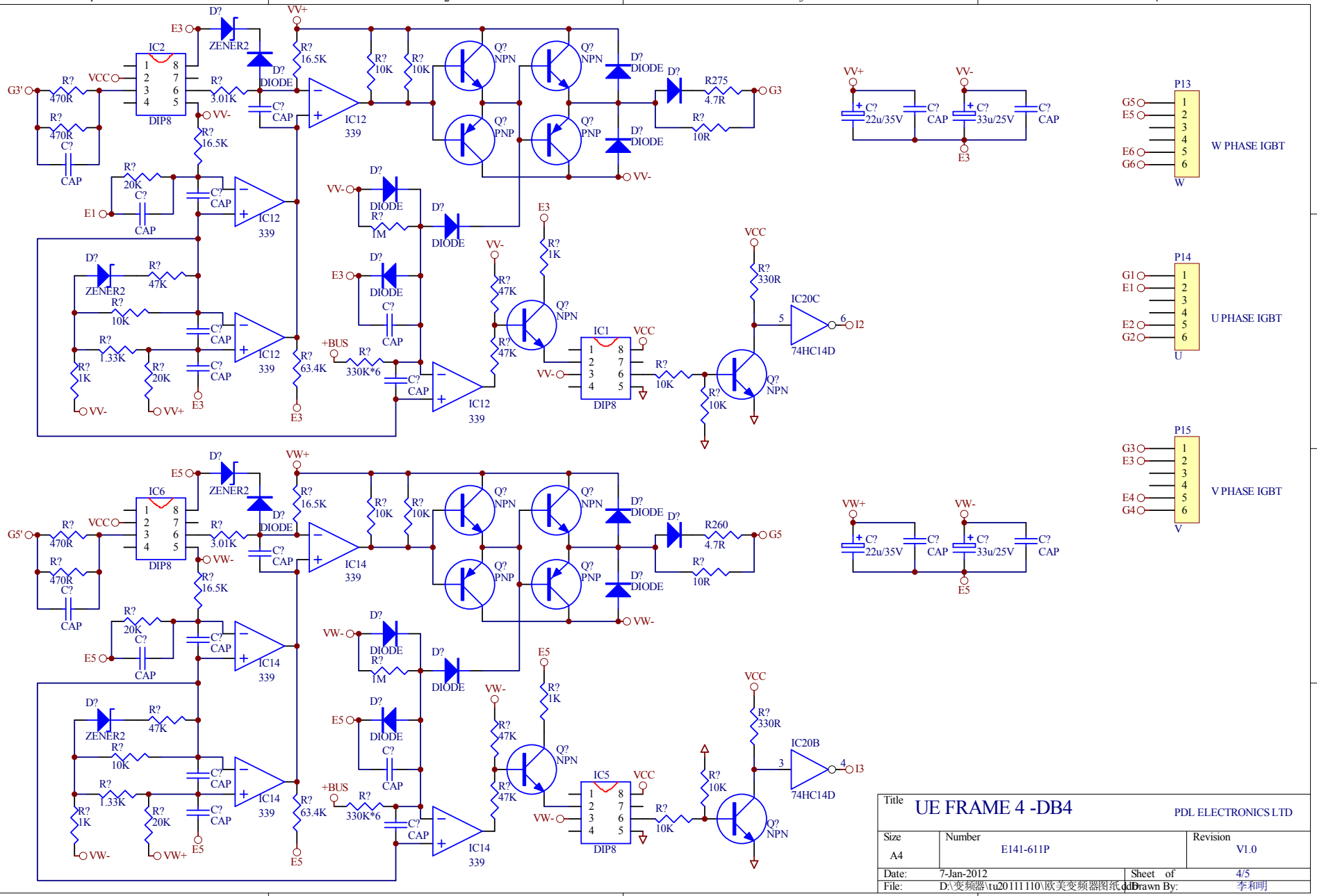

Title	UE FRAME 4 -DB4		PDL ELECTRONICS LTD
Size A4	Number E141-611P		Revision V1.0
Date: 7-Jan-2012		Sheet of	4/5
File: D:\变频器\tu20111110\欧美变频器图纸.ddb		Drawn By:	李和明