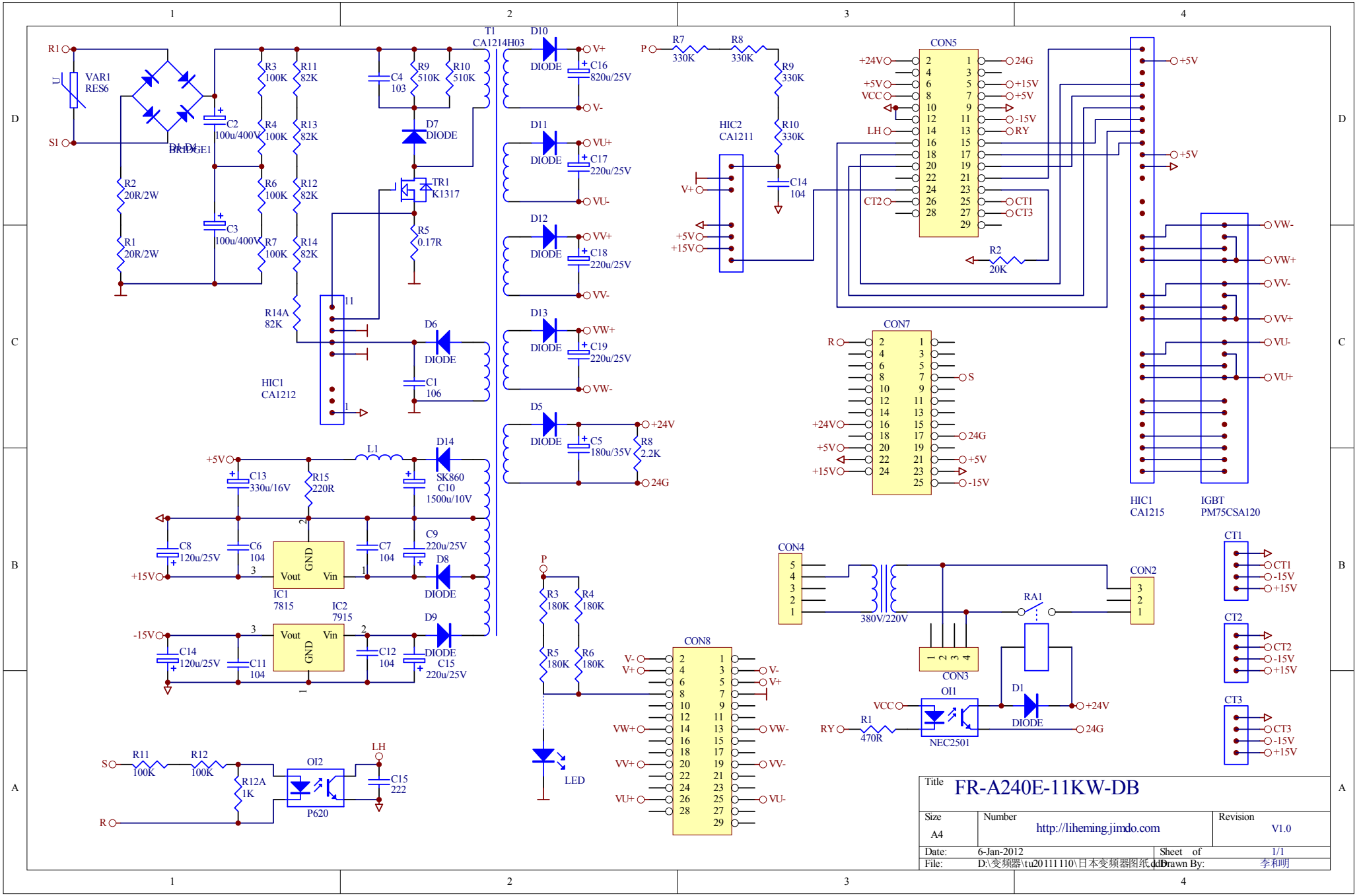
R1
S1
VAR1
RES6
D1-D4
BRIDGE1
C2
100u/400V
C3
100u/400V
R2
20R/2W
R1
20R/2W
R3
100K
R4
100K
R6
100K
R7
100K
R11
82K
R13
82K
R12
82K
R14
82K
R14A
82K
C4
103
R9
510K
R10
510K
D7
DIODE
TR1
K1317
R5
0.17R
T1
CA1214H03
D10
DIODE
C16
820u/25V
D11
DIODE
C17
220u/25V
D12
DIODE
C18
220u/25V
D13
DIODE
C19
220u/25V
D5
DIODE
C5
180u/35V
R8
2.2K
+24V
24G
V+
V-
VU+
VU-
VV+
VV-
VW+
VW-
HIC1
CA1212
D6
DIODE
C1
106
P
R7
330K
R8
330K
R9
330K
R10
330K
HIC2
CA1211
C14
104
CON5
+24V
+5V
VCC
LH
CT2
24G
+15V
+5V
-15V
RY
CT1
CT3
R2
20K
HIC1
CA1215
IGBT
PM75CSA120
CON7
R
S
+24V
+5V
+15V
24G
-15V
+5V
L1
D14
SK860
C13
330u/16V
R15
220R
C10
1500u/10V
C8
120u/25V
C6
104
C7
104
C9
220u/25V
D8
DIODE
+15V
IC1
7815
GND
Vout
Vin
IC2
7915
-15V
C14
120u/25V
C11
104
C12
104
D9
DIODE
C15
220u/25V
R3
180K
R4
180K
R5
180K
R6
180K
LED
CON8
V-
V+
VW+
VW-
VV+
VV-
VU+
VU-
CON4
380V/220V
CON2
RA1
CON3
OI1
NEC2501
D1
DIODE
VCC
RY
R1
470R
+24V
24G
CT1
CT2
CT3
-15V
+15V
S
R
R11
100K
R12
100K
R12A
1K
OI2
P620
LH
C15
222
Title
FR-A240E-11KW-DB
Size
A4
Number
http://liheming.jimdo.com
Revision
V1.0
Date:
6-Jan-2012
Sheet of
1/1
File:
D:\变频器\tu20111110\日本变频器图纸.ddb
Drawn By:
李和明