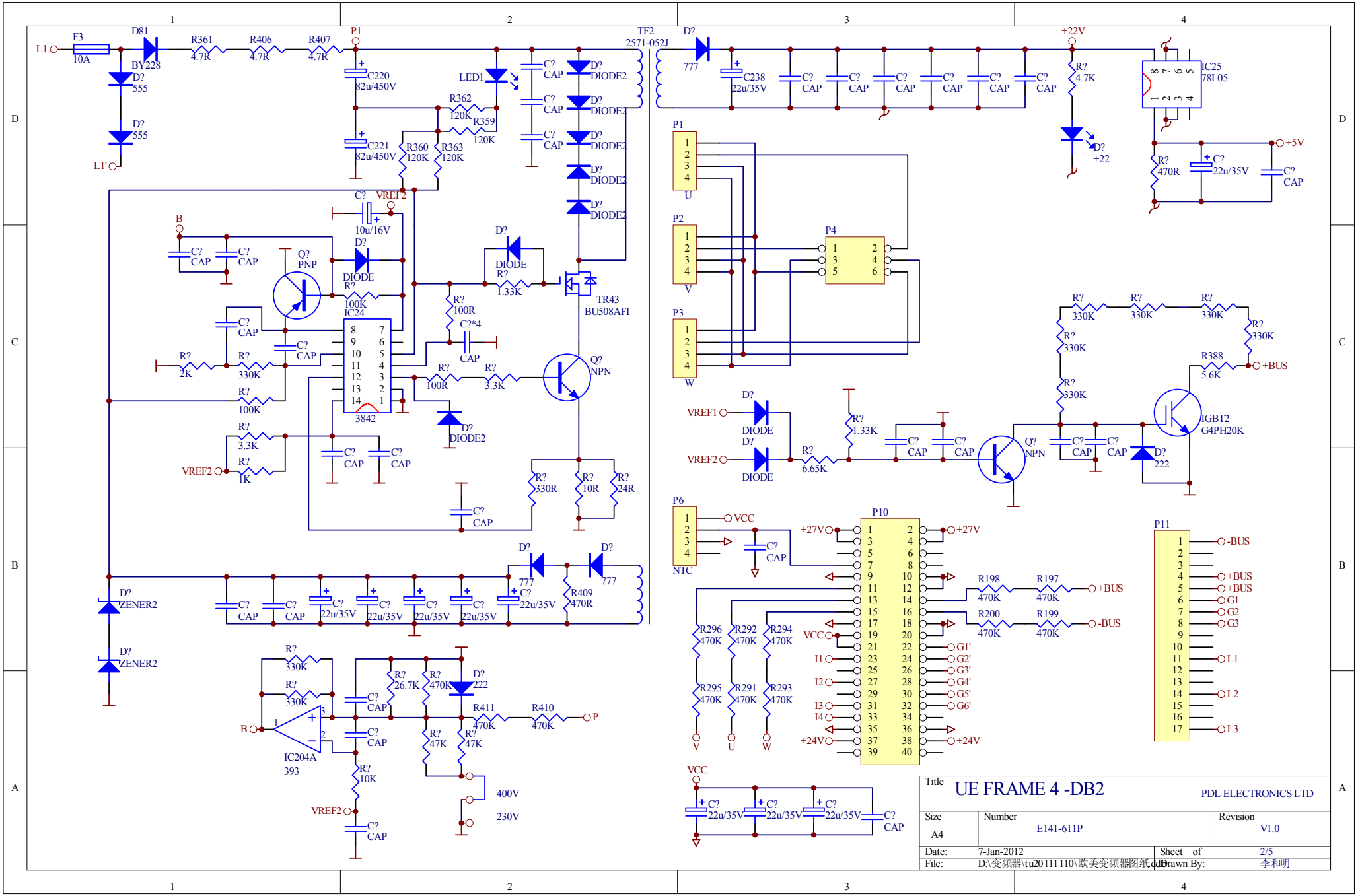
L1
F3
10A
D81
BY228
D?
555
L1'
R361
4.7R
R406
4.7R
R407
4.7R
P1
C220
82u/450V
C221
82u/450V
LED1
R362
120K
R359
120K
R360
120K
R363
120K
TF2
2571-052J
D?
DIODE2
C?
CAP
VREF2
10u/16V
B
Q?
PNP
DIODE
R?
100K
IC24
3842
R?
2K
R?
330K
R?
100K
R?
3.3K
R?
1K
R?
100R
C?*4
R?
1.33K
TR43
BU508AFI
Q?
NPN
R?
3.3K
D?
DIODE2
R?
330R
R?
10R
R?
24R
D?
ZENER2
R409
470R
777
C?
22u/35V
IC204A
393
R?
26.7K
R?
470K
D?
222
R411
470K
R410
470K
P
R?
47K
R?
10K
400V
230V
+22V
C238
22u/35V
R?
4.7K
D?
+22
IC25
78L05
+5V
R?
470R
C?
22u/35V
P2
P3
P4
U
V
W
VREF1
R?
6.65K
R?
330K
R388
5.6K
+BUS
IGBT2
G4PH20K
D?
222
P6
NTC
VCC
P10
+27V
R198
470K
R197
470K
R200
470K
R199
470K
-BUS
R296
470K
R292
470K
R294
470K
R295
470K
R291
470K
R293
470K
I1
I2
I3
I4
+24V
G1'
G2'
G3'
G4'
G5'
G6'
P11
G1
G2
G3
L1
L2
L3
Title
UE FRAME 4 -DB2
PDL ELECTRONICS LTD
Size
A4
Number
E141-611P
Revision
V1.0
Date:
7-Jan-2012
Sheet of
2/5
File:
D:\变频器\tu20111110\欧美变频器图纸.ddb
Drawn By:
李和明