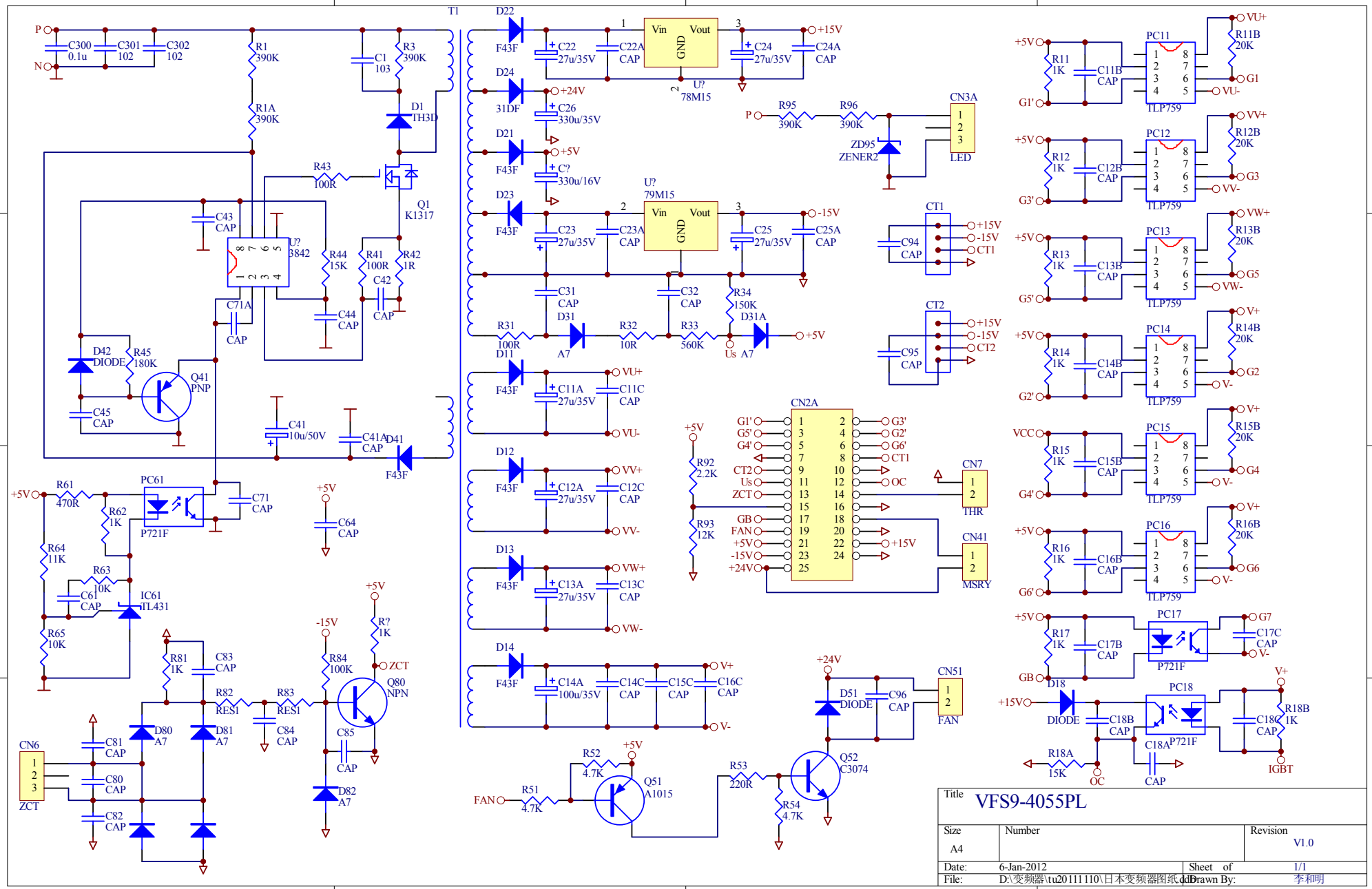
T1
P
N
C300 0.1u
C301 102
C302 102
R1 390K
R1A 390K
C1 103
R3 390K
D1 TH3D
R43 100R
Q1 K1317
C43 CAP
U? 3842
R44 15K
R41 100R
R42 1R
C42 CAP
C44 CAP
C71A CAP
D42 DIODE
R45 180K
Q41 PNP
C45 CAP
C41 10u/50V
C41A CAP
D41 F43F
R61 470R
PC61 P721F
C71 CAP
R62 1K
R64 11K
R63 10K
C61 CAP
IC61 TL431
R65 10K
+5V
C64 CAP
R81 1K
C83 CAP
R82 RES1
R83 RES1
C84 CAP
-15V
R84 100K
R? 1K
ZCT
Q80 NPN
C85 CAP
D82 A7
D80 A7
D81 A7
CN6
C81 CAP
C80 CAP
C82 CAP
D22 F43F
C22 27u/35V
C22A CAP
Vin Vout GND
U? 78M15
C24 27u/35V
C24A CAP
+15V
D24 31DF
+24V
C26 330u/35V
D21 F43F
C? 330u/16V
D23 F43F
C23 27u/35V
C23A CAP
U? 79M15
C25 27u/35V
C25A CAP
-15V
C31 CAP
C32 CAP
R34 150K
R31 100R
D31 A7
R32 10R
R33 560K
Us
D31A A7
D11 F43F
C11A 27u/35V
C11C CAP
VU+
VU-
D12 F43F
C12A 27u/35V
C12C CAP
VV+
VV-
D13 F43F
C13A 27u/35V
C13C CAP
VW+
VW-
D14 F43F
C14A 100u/35V
C14C CAP
C15C CAP
C16C CAP
V+
V-
R95 390K
R96 390K
ZD95 ZENER2
CN3A LED
CT1
C94 CAP
CT2
C95 CAP
CN2A
G1' G5' G4' CT2 Us ZCT GB FAN +5V -15V +24V
G3' G2' G6' CT1 OC +15V
R92 2.2K
R93 12K
CN7 THR
CN41 MSRY
+24V
D51 DIODE
C96 CAP
CN51 FAN
R52 4.7K
Q51 A1015
FAN
R51 4.7K
R53 220R
Q52 C3074
R54 4.7K
PC11 TLP759
R11 1K
C11B CAP
R11B 20K
G1 VU-
PC12
R12 1K
C12B CAP
R12B 20K
G3 VV-
PC13
R13 1K
C13B CAP
R13B 20K
G5 VW-
PC14
R14 1K
C14B CAP
R14B 20K
G2 V-
PC15
R15 1K
C15B CAP
R15B 20K
G4 V-
VCC
PC16
R16 1K
C16B CAP
R16B 20K
G6 V-
PC17 P721F
R17 1K
C17B CAP
C17C CAP
G7
GB
D18 DIODE
C18B CAP
PC18 P721F
C18A CAP
C18C CAP
R18B 1K
IGBT
R18A 15K
OC
Title VFS9-4055PL
Size A4
Number
Revision V1.0
Date: 6-Jan-2012
Sheet of 1/1
File: D:\变频器\tu20111110\日本变频器图纸.ddb
Drawn By: 李和明