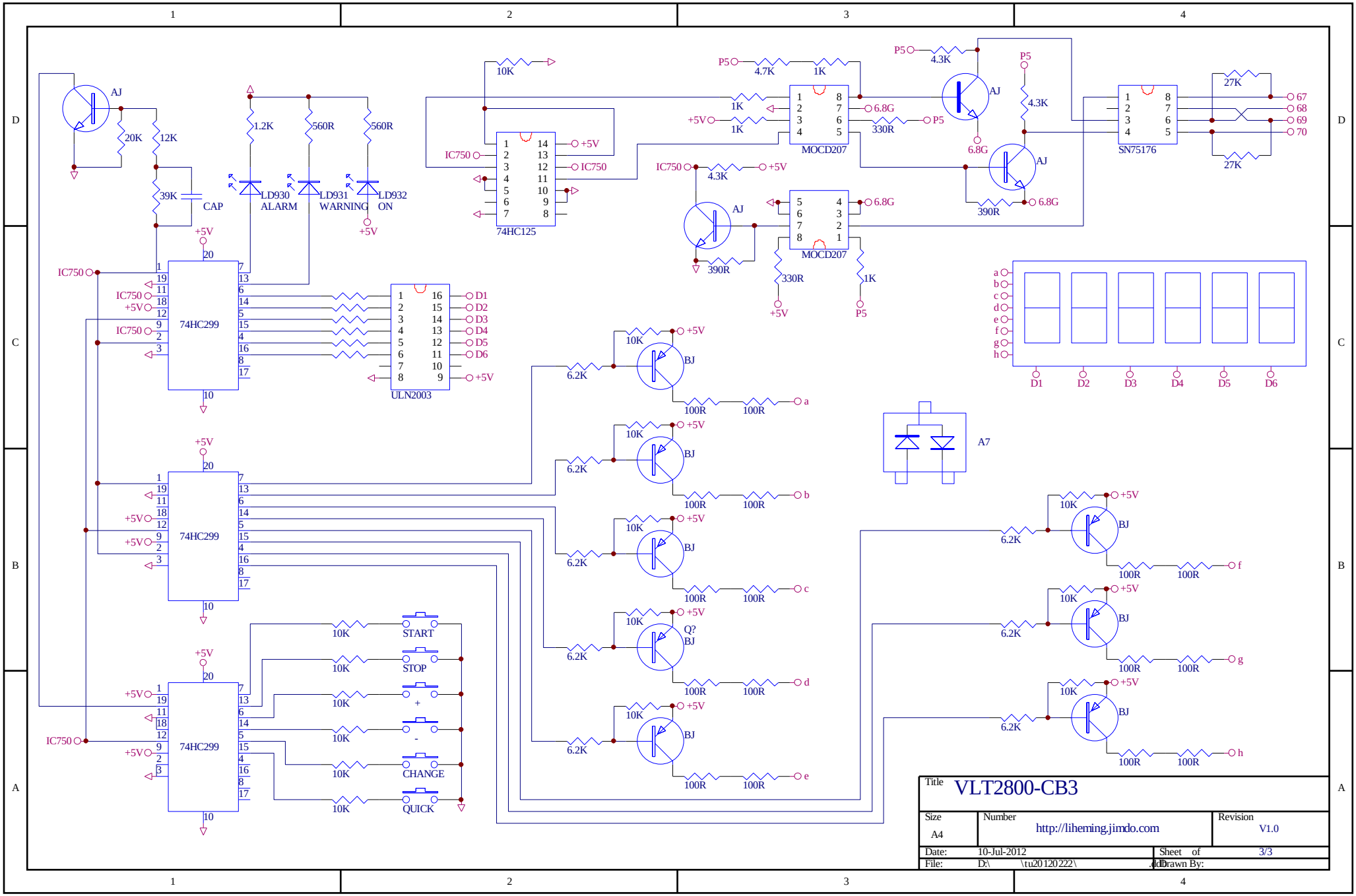
AJ
20K
12K
39K
CAP
1.2K
560R
560R
LD930
ALARM
LD931
WARNING
LD932
ON
+5V
IC750
74HC299
ULN2003
D1
D2
D3
D4
D5
D6
10K
74HC125
4.7K
1K
6.8G
330R
MOCD207
P5
4.3K
390R
SN75176
27K
67
68
69
70
BJ
6.2K
100R
a
b
c
d
e
f
g
h
Q?
START
STOP
+
-
CHANGE
QUICK
A7
Title
VLT2800-CB3
Size
A4
Number
http://liheming.jimdo.com
Revision
V1.0
Date:
10-Jul-2012
Sheet of
3/3
File:
D:\ \tu20120222\
Drawn By: