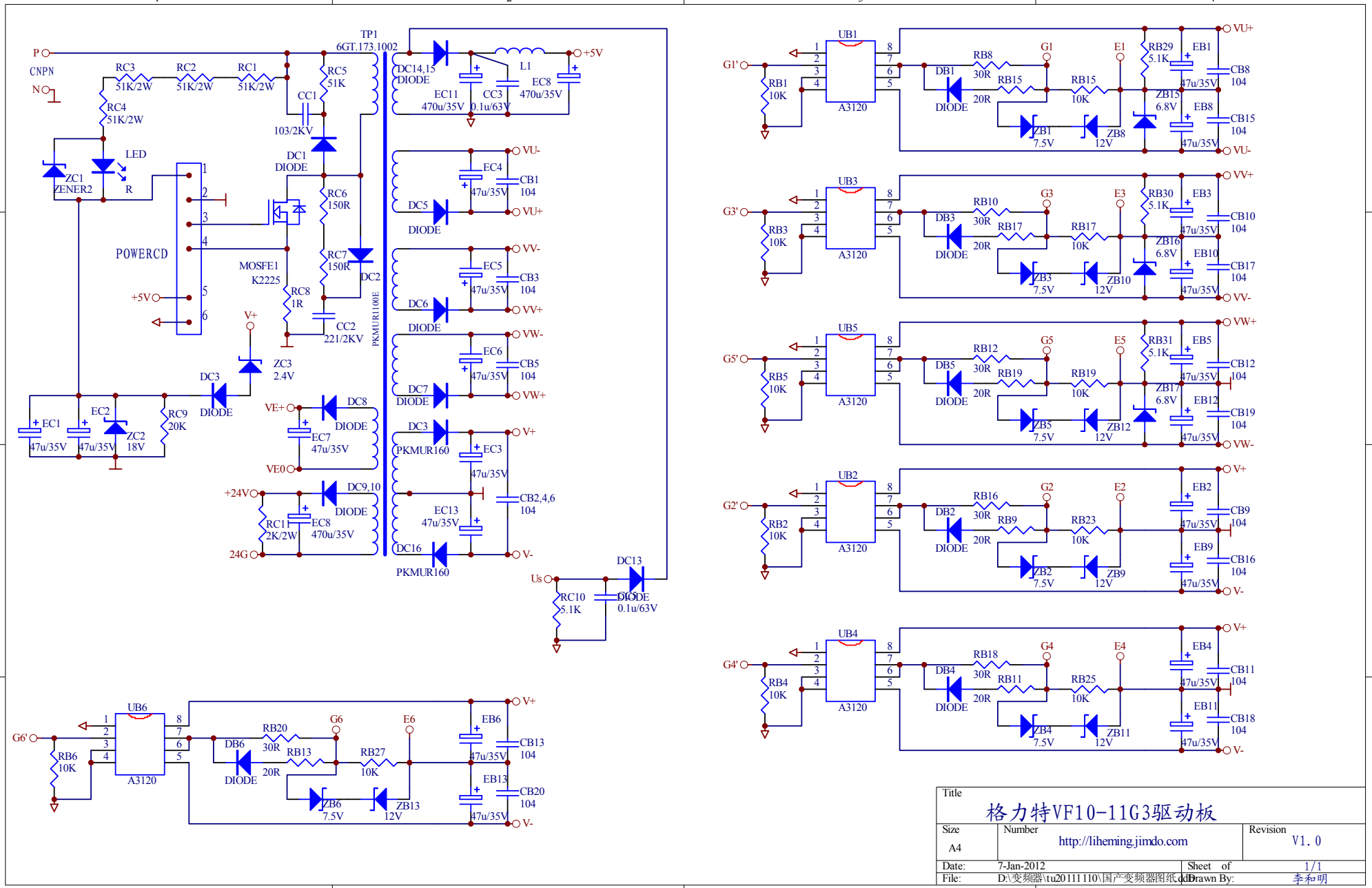
P
CNPN
N
RC3 51K/2W
RC2 51K/2W
RC1 51K/2W
RC4 51K/2W
RC5 51K
CC1 103/2KV
LED
R
ZC1 ZENER2
DC1 DIODE
RC6 150R
RC7 150R
DC2
MOSFE1 K2225
RC8 1R
CC2 221/2KV
POWERCD
+5V
V+
ZC3 2.4V
DC3 DIODE
EC1 47u/35V
EC2 47u/35V
ZC2 18V
RC9 20K
TP1 6GT.173.1002
PKMUR1100E
DC14,15 DIODE
EC11 470u/35V
CC3 0.1u/63V
L1
EC8 470u/35V
+5V
VU-
EC4 47u/35V
CB1 104
DC5 DIODE
VU+
VV-
EC5 47u/35V
CB3 104
DC6 DIODE
VV+
VW-
EC6 47u/35V
CB5 104
DC7 DIODE
VW+
VE+
DC8 DIODE
EC7 47u/35V
VE0
+24V
DC9,10 DIODE
RC11 2K/2W
EC8 470u/35V
24G
DC3 PKMUR160
V+
EC3 47u/35V
CB2,4,6 104
EC13 47u/35V
DC16 PKMUR160
V-
Us
RC10 5.1K
DC13 DIODE
CC4 0.1u/63V
UB1
G1'
RB1 10K
A3120
DB1 DIODE
RB8 30R
RB15 20R
G1
RB15 10K
E1
RB29 5.1K
EB1 47u/35V
CB8 104
ZB1 7.5V
ZB8 12V
ZB15 6.8V
EB8 47u/35V
CB15 104
VU+
VU-
UB3
G3'
RB3 10K
DB3 DIODE
RB10 30R
RB17 20R
G3
RB17 10K
E3
RB30 5.1K
EB3 47u/35V
CB10 104
ZB3 7.5V
ZB10 12V
ZB16 6.8V
EB10 47u/35V
CB17 104
VV+
VV-
UB5
G5'
RB5 10K
DB5 DIODE
RB12 30R
RB19 20R
G5
RB19 10K
E5
RB31 5.1K
EB5 47u/35V
CB12 104
ZB5 7.5V
ZB12 12V
ZB17 6.8V
EB12 47u/35V
CB19 104
VW+
VW-
UB2
G2'
RB2 10K
DB2 DIODE
RB16 30R
RB9 20R
G2
RB23 10K
E2
EB2 47u/35V
CB9 104
ZB2 7.5V
ZB9 12V
EB9 47u/35V
CB16 104
V+
V-
UB4
G4'
RB4 10K
DB4 DIODE
RB18 30R
RB11 20R
G4
RB25 10K
E4
EB4 47u/35V
CB11 104
ZB4 7.5V
ZB11 12V
EB11 47u/35V
CB18 104
V+
V-
UB6
G6'
RB6 10K
DB6 DIODE
RB20 30R
RB13 20R
G6
RB27 10K
E6
EB6 47u/35V
CB13 104
ZB6 7.5V
ZB13 12V
EB13 47u/35V
CB20 104
V+
V-
Title
格力特VF10-11G3驱动板
Size
A4
Number
http://liheming.jimdo.com
Revision
V1.0
Date: 7-Jan-2012
Sheet of 1/1
File: D:\变频器\tu20111110\国产变频器图纸.ddb
Drawn By: 李和明