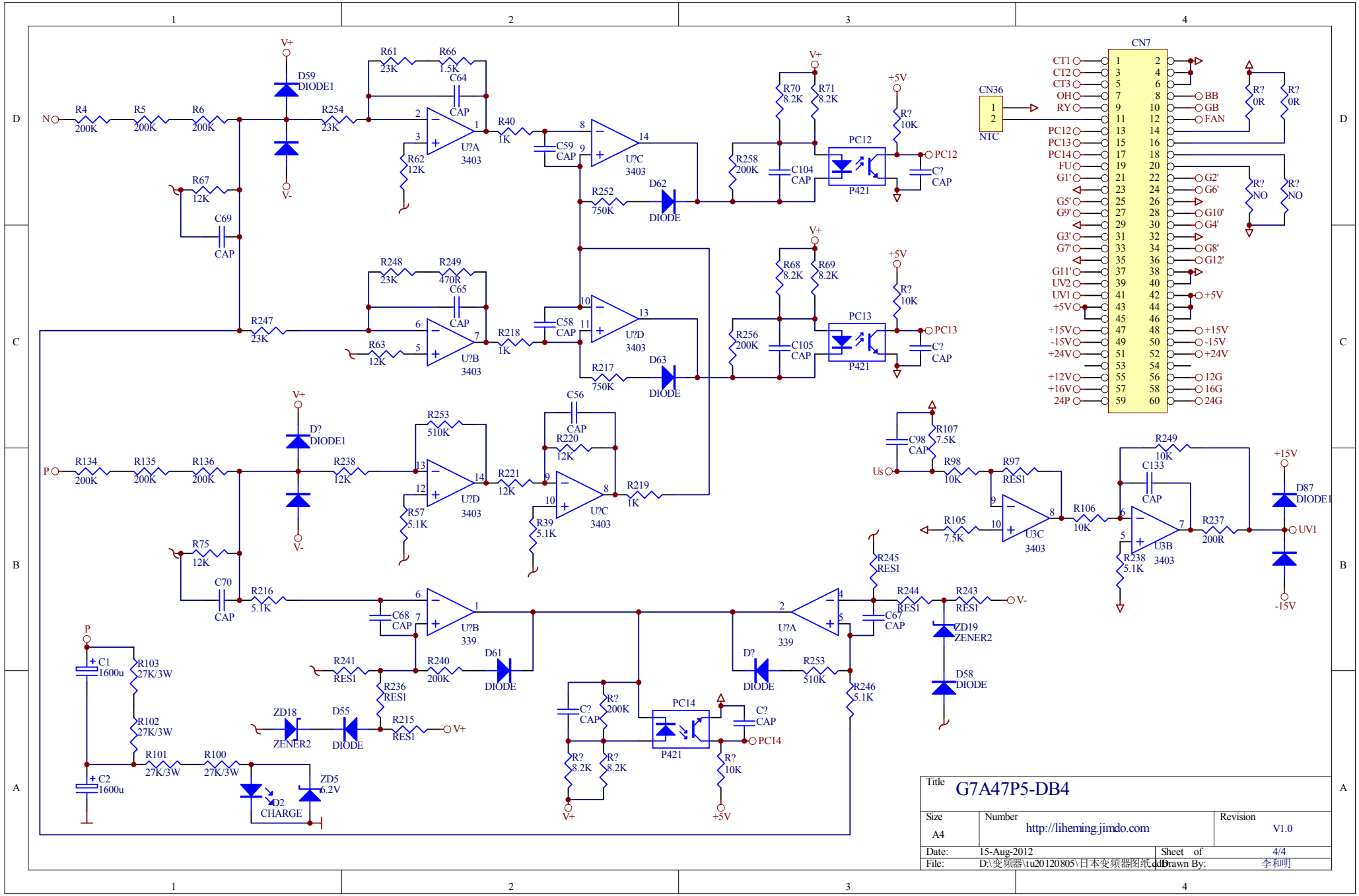
CN7
CN36
NTC
N
P
Us
UV1
PC12
PC13
PC14
BB
GB
FAN
G2'
G6'
G10'
G4'
G8'
G12'
+15V
-15V
+24V
12G
16G
24G
CT1
CT2
CT3
OH
RY
FU
G1'
G5'
G9'
G3'
G7'
G11'
UV2
UV1
+5V
+12V
+16V
24P
V+
V-
+5V
+15V
-15V
D59 DIODE1
D? DIODE1
D87 DIODE1
D62 DIODE
D63 DIODE
D61 DIODE
D55 DIODE
D? DIODE
D58 DIODE
ZD18 ZENER2
ZD19 ZENER2
ZD5 6.2V
D2 CHARGE
P421
U?A 3403
U?B 3403
U?C 3403
U?D 3403
U3B 3403
U3C 3403
U?A 339
U?B 339
Title
G7A47P5-DB4
Size
A4
Number
http://liheming.jimdo.com
Revision
V1.0
Date:
15-Aug-2012
Sheet of
4/4
File:
D:\变频器\tu20120805\日本变频器图纸.ddb
Drawn By:
李和明