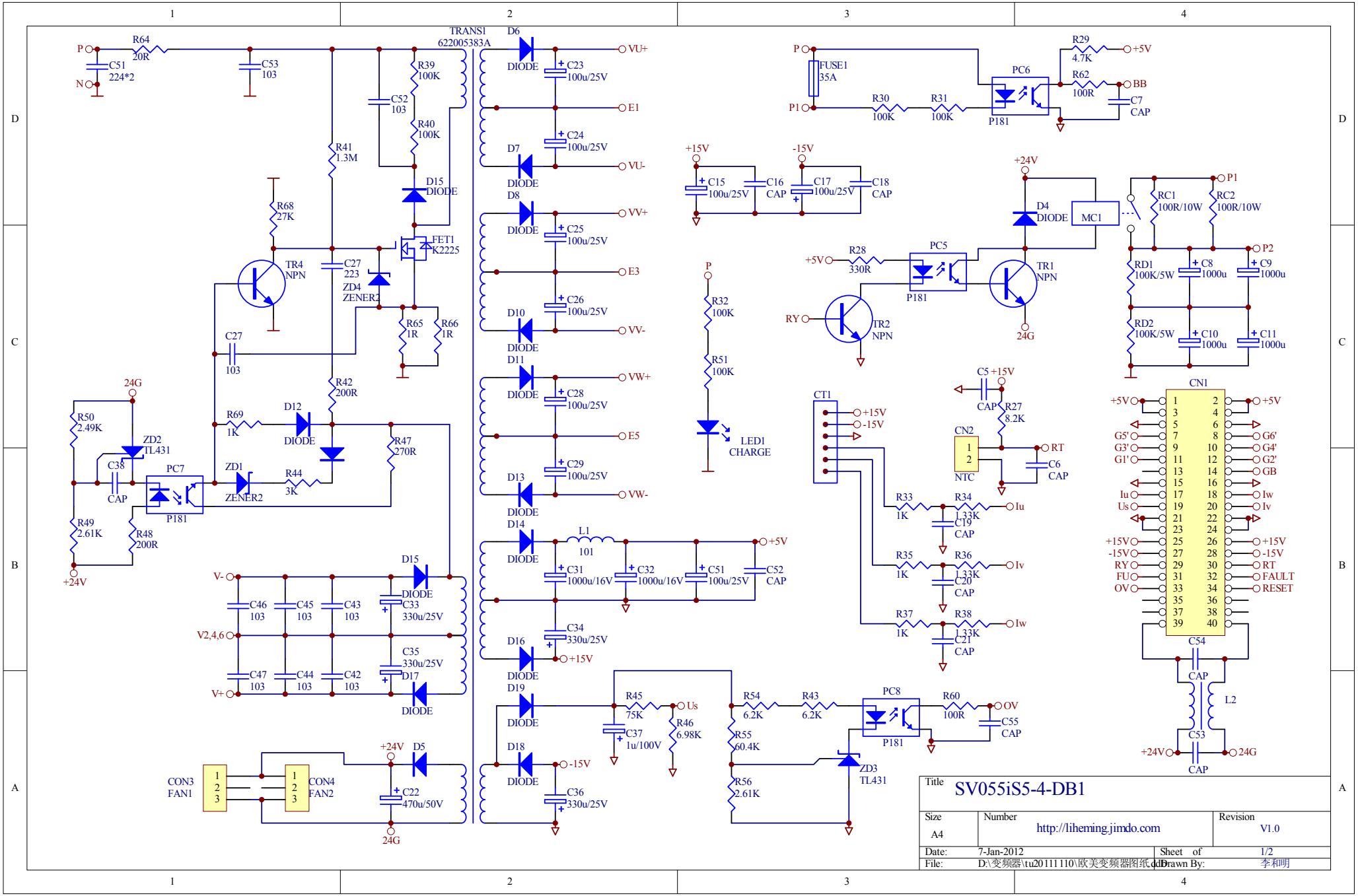

Title	SV055iS5-4-DB1	
Size A4	Number http://liheming.jimdo.com	Revision V1.0
Date: 7-Jan-2012	Sheet of	1/2
File: D:\变频器\tu20111110\欧美变频器图纸.ddb	Drawn By:	李和明