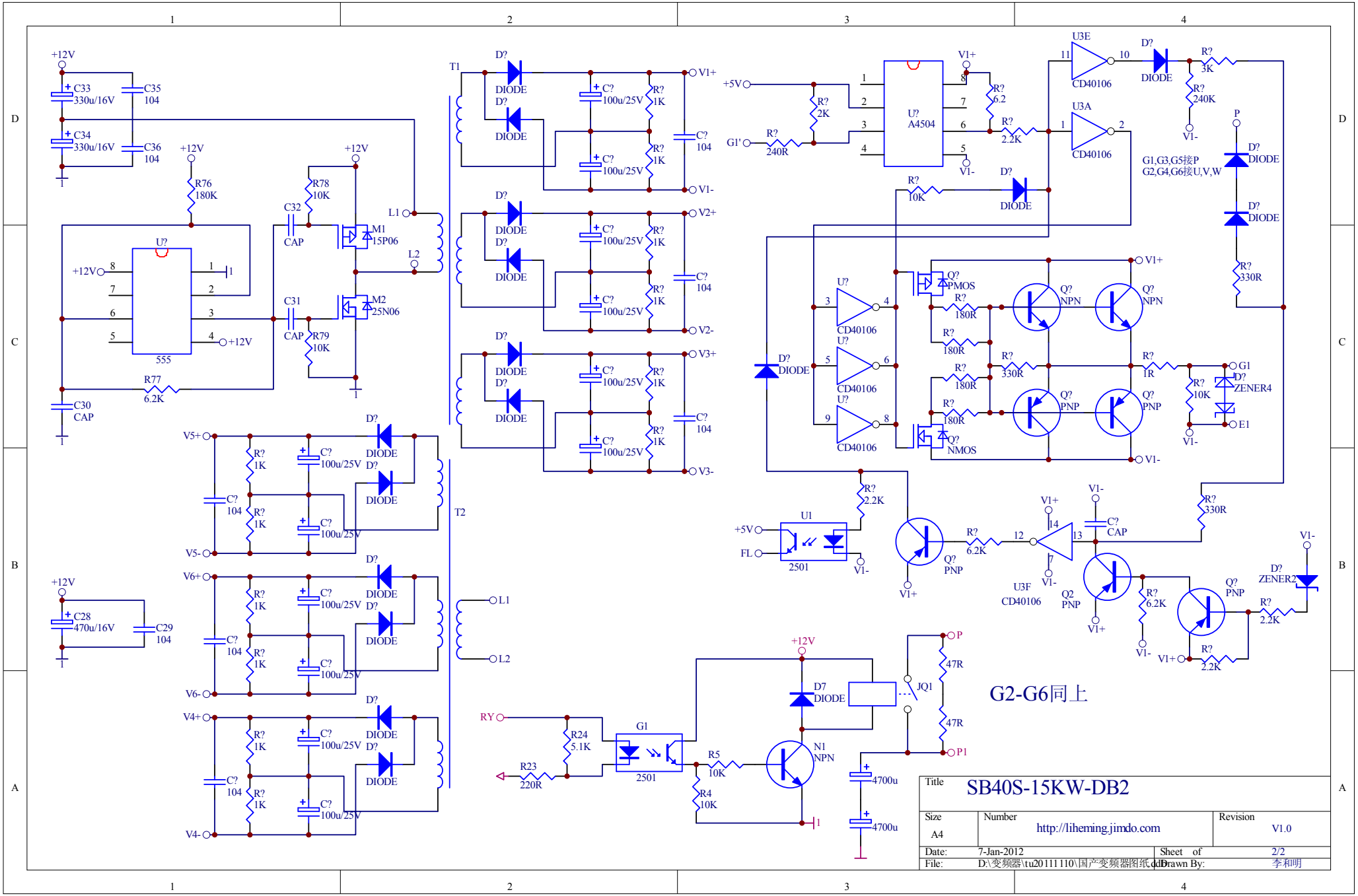
+12V
C33 330u/16V
C35 104
C34 330u/16V
C36 104
R76 180K
R78 10K
C32 CAP
M1 15P06
L1
L2
U?
555
C31 CAP
M2 25N06
R79 10K
R77 6.2K
C30 CAP
T1
DIODE
C? 100u/25V
R? 1K
C? 104
V1+
V1-
V2+
V2-
V3+
V3-
T2
V5+
V5-
V6+
V6-
V4+
V4-
C28 470u/16V
C29 104
+5V
G1'
R? 240R
R? 2K
U? A4504
R? 6.2
R? 2.2K
R? 10K
U3E CD40106
U3A CD40106
R? 3K
R? 240K
P
G1,G3,G5接P
G2,G4,G6接U,V,W
R? 330R
CD40106
Q? PMOS
Q? NPN
Q? PNP
Q? NMOS
R? 180R
R? 1R
G1
E1
ZENER4
U1
2501
FL
Q? PNP
U3F CD40106
Q2 PNP
C? CAP
ZENER2
RY
R24 5.1K
R23 220R
G1
R5 10K
R4 10K
N1 NPN
D7 DIODE
JQ1
47R
P1
4700u
G2-G6同上
Title
SB40S-15KW-DB2
Size
A4
Number
http://liheming.jimdo.com
Revision
V1.0
Date: 7-Jan-2012
Sheet of 2/2
File: D:\变频器\tu20111110\国产变频器图纸.ddb
Drawn By: 李和明