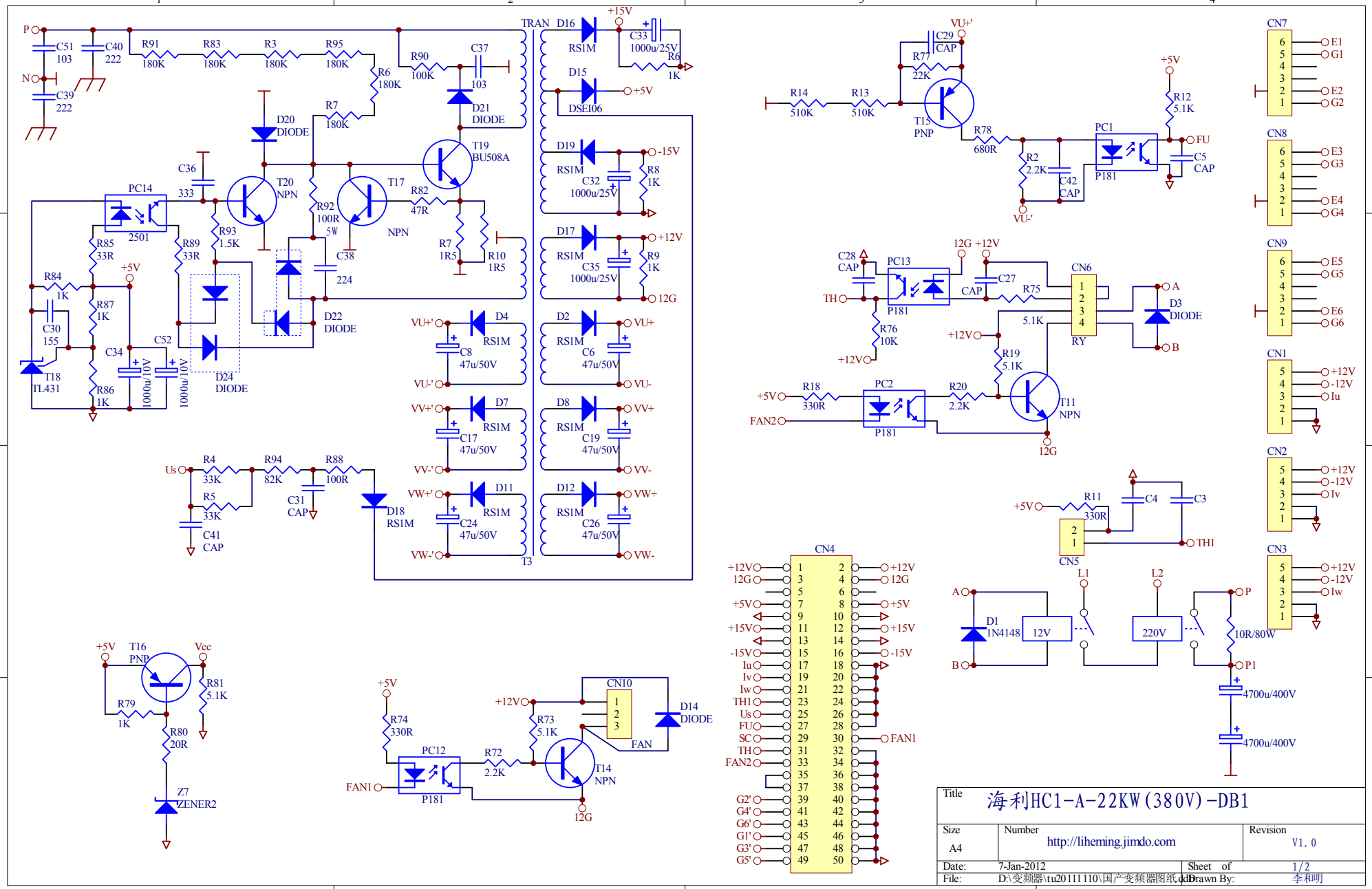
P
N
C51 103
C40 222
C39 222
R91 180K
R83 180K
R3 180K
R95 180K
R6 180K
R90 100K
C37 103
D21 DIODE
R7 180K
D20 DIODE
T19 BU508A
T20 NPN
T17 NPN
R92 100R 5W
R82 47R
R7 1R5
R10 1R5
C38 224
C36 333
PC14 2501
R93 1.5K
R85 33R
R89 33R
R84 1K
+5V
R87 1K
C30 155
T18 TL431
R86 1K
C34 1000u/10V
C52 1000u/10V
D24 DIODE
D22 DIODE
TRAN
D16 RS1M
+15V
C33 1000u/25V
R6 1K
D15 DSEI06
+5V
D19 RS1M
-15V
C32 1000u/25V
R8 1K
D17 RS1M
+12V
C35 1000u/25V
R9 1K
12G
VU+'
D4 RS1M
C8 47u/50V
VU-'
D2 RS1M
VU+
C6 47u/50V
VU-
VV+'
D7 RS1M
C17 47u/50V
VV-'
D8 RS1M
VV+
C19 47u/50V
VV-
VW+'
D11 RS1M
C24 47u/50V
VW-'
D12 RS1M
VW+
C26 47u/50V
VW-
T3
Us
R4 33K
R5 33K
C41 CAP
R94 82K
R88 100R
C31 CAP
D18 RS1M
+5V
T16 PNP
Vcc
R81 5.1K
R79 1K
R80 20R
Z7 ZENER2
+5V
R74 330R
PC12 P181
FAN1
R72 2.2K
+12V
R73 5.1K
CN10
FAN
D14 DIODE
T14 NPN
12G
CN4
+12V
12G
+5V
+15V
-15V
Iu
Iv
Iw
TH1
Us
FU
SC
TH
FAN2
G2'
G4'
G6'
G1'
G3'
G5'
FAN1
VU+'
C29 CAP
R77 22K
R14 510K
R13 510K
T15 PNP
R78 680R
R2 2.2K
C42 CAP
VU'
PC1 P181
R12 5.1K
FU
C5 CAP
C28 CAP
TH
PC13 P181
12G +12V
C27 CAP
R75 5.1K
CN6 RY
A
D3 DIODE
B
R76 10K
+12V
R19 5.1K
+5V
R18 330R
FAN2
PC2 P181
R20 2.2K
T11 NPN
12G
R11 330R
CN5
C4
C3
TH1
A
D1 1N4148
B
L1 12V
L2 220V
P
10R/80W
P1
4700u/400V
4700u/400V
CN7
E1
G1
E2
G2
CN8
E3
G3
E4
G4
CN9
E5
G5
E6
G6
CN1
+12V
-12V
Iu
CN2
+12V
-12V
Iv
CN3
+12V
-12V
Iw
Title
海利HC1-A-22KW(380V)-DB1
Size
A4
Number
http://liheming.jimdo.com
Revision
V1.0
Date: 7-Jan-2012
Sheet of 1/2
File: D:\变频器\tu20111110\国产变频器图纸.ddb
Drawn By: 李和明