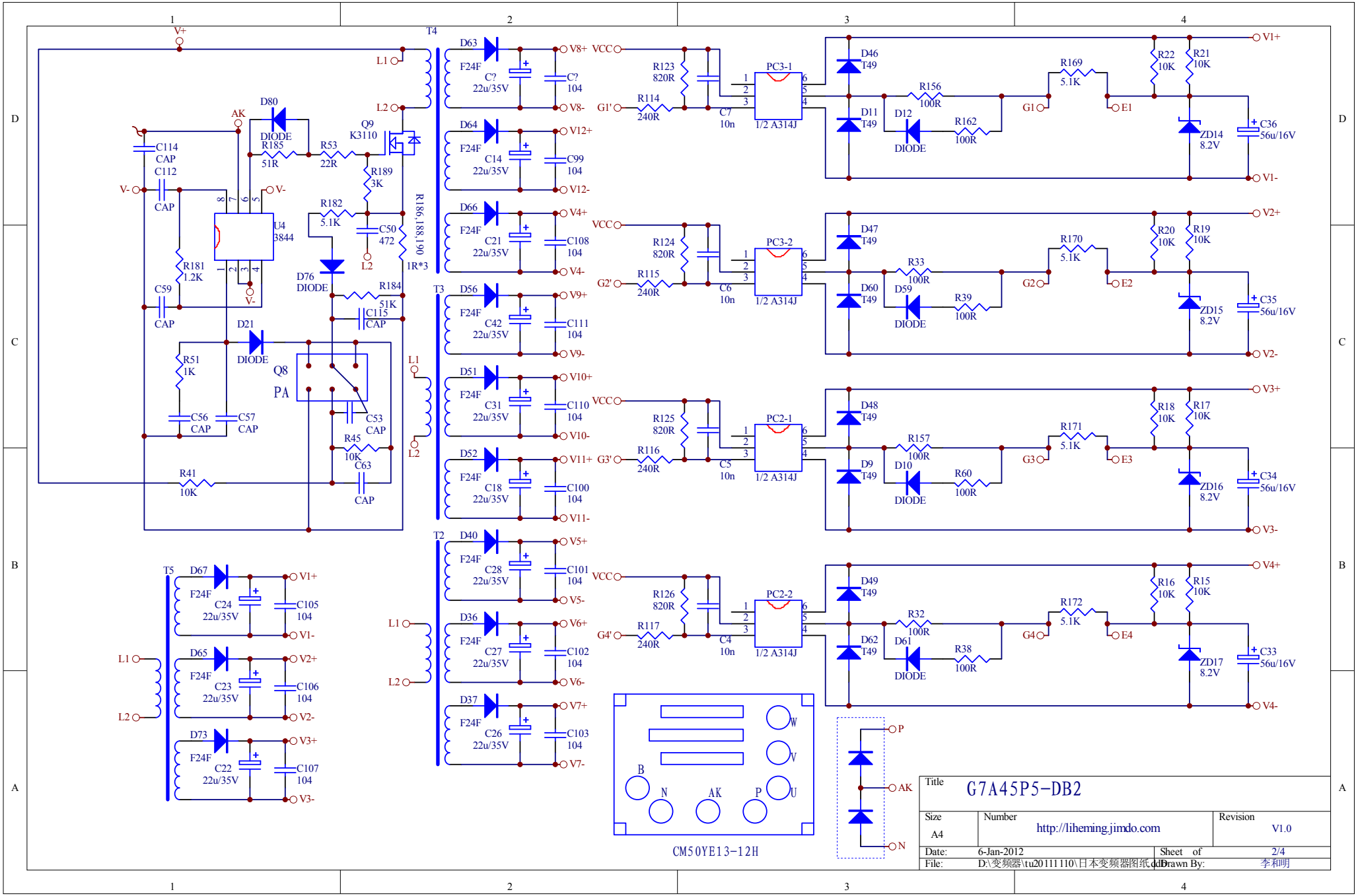

Title	G7A45P5-DB2	
Size A4	Number http://liheming.jimdo.com	Revision V1.0
Date: 6-Jan-2012	Sheet of 2/4	
File: D:\变频器\tu20111110\日本变频器图纸.ddb	Drawn By: 李和明	