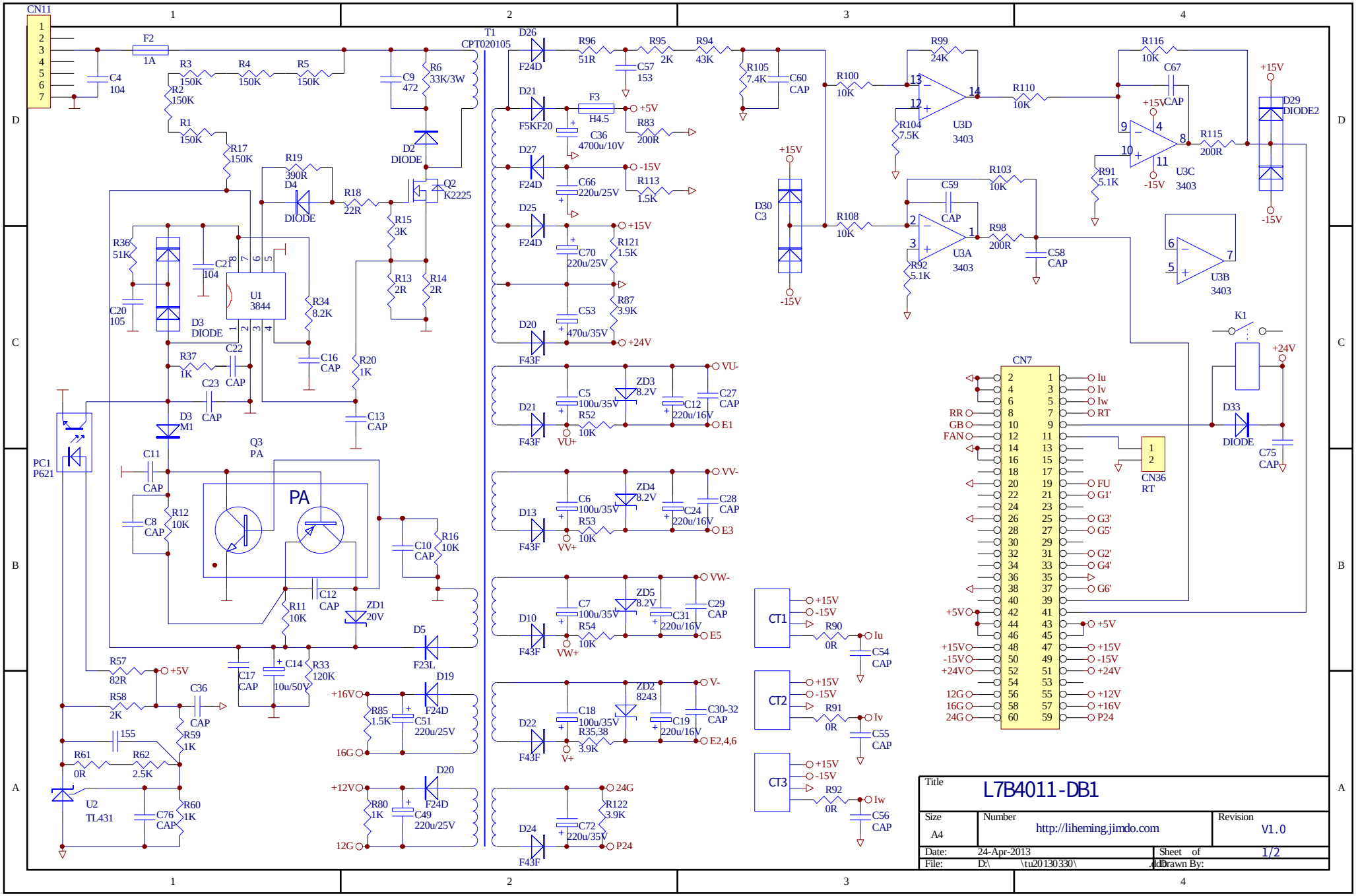
CN11
F2
1A
C4
104
R3
150K
R4
150K
R5
150K
R2
150K
R1
150K
R17
150K
C9
472
R6
33K/3W
D2
DIODE
T1
CPT020105
D26
F24D
R96
51R
R95
2K
R94
43K
C57
153
R105
7.4K
C60
CAP
D21
F5KF20
F3
H4.5
+5V
R83
200R
C36
4700u/10V
D27
F24D
-15V
R113
1.5K
C66
220u/25V
D25
F24D
+15V
R121
1.5K
C70
220u/25V
R87
3.9K
C53
470u/35V
D20
F43F
+24V
R19
390R
D4
DIODE
R18
22R
Q2
K2225
R15
3K
R36
51K
C21
104
U1
3844
R34
8.2K
R13
2R
R14
2R
C20
105
D3
DIODE
R37
1K
C22
C23
CAP
C16
CAP
R20
1K
C13
CAP
D3
M1
PC1
P621
C11
CAP
Q3
PA
PA
C8
CAP
R12
10K
C10
CAP
R16
10K
C12
CAP
R11
10K
ZD1
20V
D5
F23L
R57
82R
+5V
C17
CAP
C14
10u/50V
R33
120K
R58
2K
C36
CAP
R59
1K
155
R61
0R
R62
2.5K
U2
TL431
C76
CAP
R60
1K
+16V
R85
1.5K
D19
F24D
C51
220u/25V
16G
+12V
R80
1K
D20
F24D
C49
220u/25V
12G
VU-
ZD3
8.2V
C5
100u/35V
C27
CAP
C12
220u/16V
R52
10K
D21
F43F
VU+
E1
VV-
ZD4
8.2V
C6
100u/35V
C28
CAP
C24
220u/16V
R53
10K
D13
F43F
VV+
E3
VW-
ZD5
8.2V
C7
100u/35V
C29
CAP
C31
220u/16V
R54
10K
D10
F43F
VW+
E5
V-
ZD2
8243
C18
100u/35V
C30-32
CAP
C19
220u/16V
R35,38
3.9K
D22
F43F
V+
E2,4,6
24G
R122
3.9K
C72
220u/35V
D24
F43F
P24
R99
24K
R100
10K
R104
7.5K
U3D
3403
R110
10K
R116
10K
C67
CAP
+15V
R115
200R
R91
5.1K
U3C
3403
-15V
D29
DIODE2
+15V
D30
C3
-15V
R108
10K
C59
CAP
R103
10K
R98
200R
C58
CAP
R92
5.1K
U3A
3403
U3B
3403
K1
+24V
D33
DIODE
C75
CAP
CN7
RR
GB
FAN
FU
G1'
G3'
G5'
G2'
G4'
G6'
+5V
+15V
-15V
+24V
12G
16G
24G
Iu
Iv
Iw
RT
CN36
RT
CT1
CT2
CT3
R90
0R
R91
0R
R92
0R
C54
CAP
C55
CAP
C56
CAP
Title
L7B4011-DB1
Size
A4
Number
http://liheming.jimdo.com
Revision
V1.0
Date:
24-Apr-2013
Sheet of
1/2
File:
D:\ \tu20130330\
Drawn By: