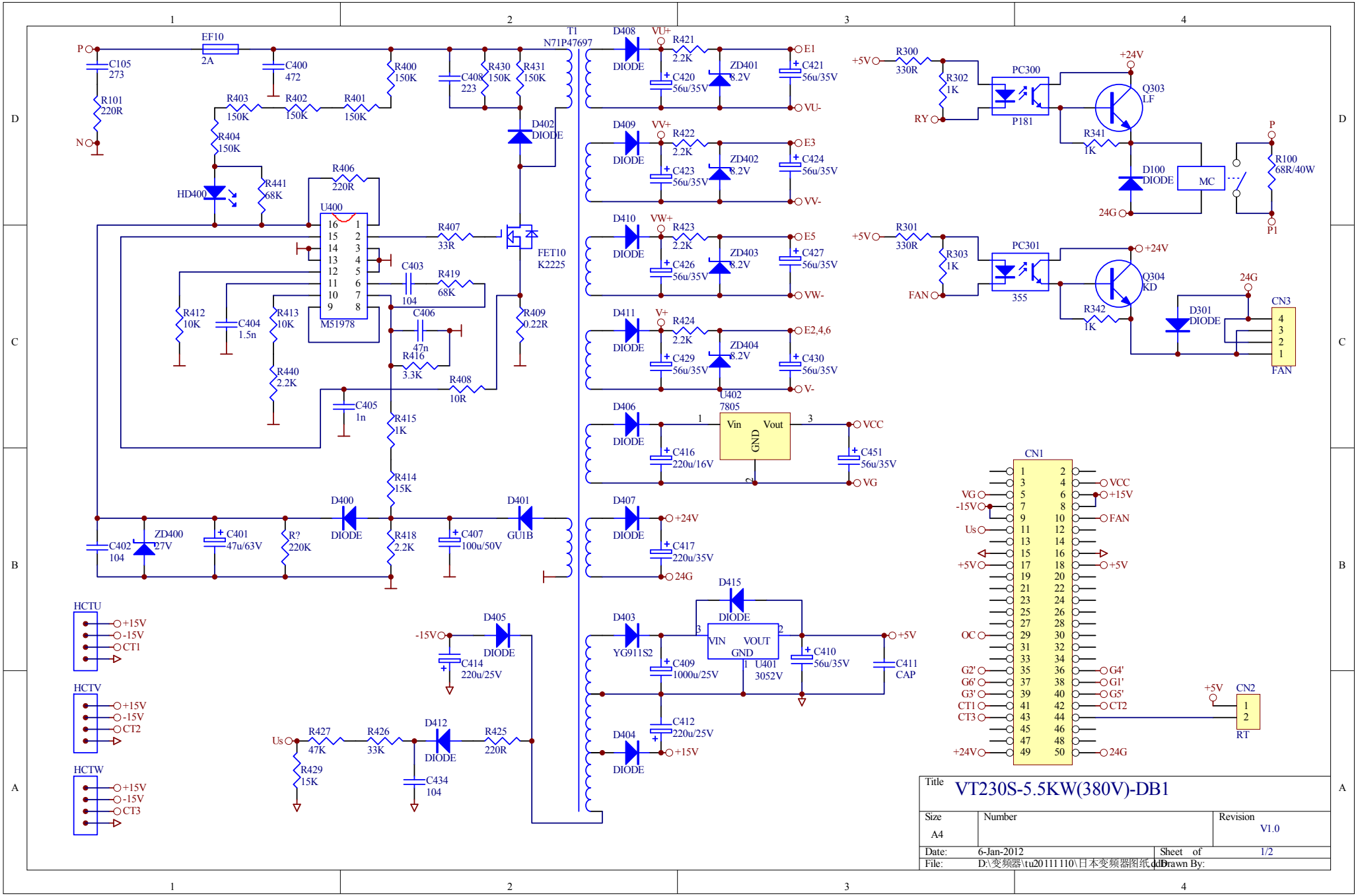
P
N
C105 273
R101 220R
EF10 2A
C400 472
R400 150K
C408 223
R430 150K
R431 150K
T1 N71P47697
R403 150K
R402 150K
R401 150K
R404 150K
HD400
R441 68K
R406 220R
U400
M51978
R407 33R
FET10 K2225
D402 DIODE
C403 104
R419 68K
C406 47n
R412 10K
C404 1.5n
R413 10K
R440 2.2K
R416 3.3K
R408 10R
R409 0.22R
C405 1n
R415 1K
R414 15K
D400 DIODE
D401 GU1B
C402 104
ZD400 27V
C401 47u/63V
R? 220K
R418 2.2K
C407 100u/50V
HCTU
+15V
-15V
CT1
HCTV
+15V
-15V
CT2
HCTW
+15V
-15V
CT3
-15V
D405 DIODE
C414 220u/25V
Us
R427 47K
R426 33K
D412 DIODE
R425 220R
R429 15K
C434 104
D408 DIODE
VU+
R421 2.2K
C420 56u/35V
ZD401 8.2V
C421 56u/35V
E1
VU-
D409 DIODE
VV+
R422 2.2K
C423 56u/35V
ZD402 8.2V
C424 56u/35V
E3
VV-
D410 DIODE
VW+
R423 2.2K
C426 56u/35V
ZD403 8.2V
C427 56u/35V
E5
VW-
D411 DIODE
V+
R424 2.2K
C429 56u/35V
ZD404 8.2V
C430 56u/35V
E2,4,6
V-
D406 DIODE
C416 220u/16V
U402 7805
Vin
Vout
GND
VCC
C451 56u/35V
VG
D407 DIODE
+24V
C417 220u/35V
24G
D415 DIODE
D403 YG911S2
C409 1000u/25V
VIN
VOUT
GND
U401 3052V
C410 56u/35V
+5V
C411 CAP
D404 DIODE
C412 220u/25V
+15V
+5V
R300 330R
R302 1K
RY
PC300
P181
+24V
Q303 LF
R341 1K
D100 DIODE
MC
24G
P
R100 68R/40W
P1
+5V
R301 330R
R303 1K
FAN
PC301
355
+24V
Q304 KD
R342 1K
24G
D301 DIODE
CN3
FAN
CN1
VCC
+15V
VG
-15V
FAN
Us
+5V
OC
G2'
G6'
G3'
CT1
CT3
G4'
G1'
G5'
CT2
+24V
24G
+5V
CN2
RT
Title
VT230S-5.5KW(380V)-DB1
Size
A4
Number
Revision
V1.0
Date:
6-Jan-2012
Sheet of
1/2
File:
D:\变频器\tu20111110\日本变频器图纸.ddb
Drawn By: