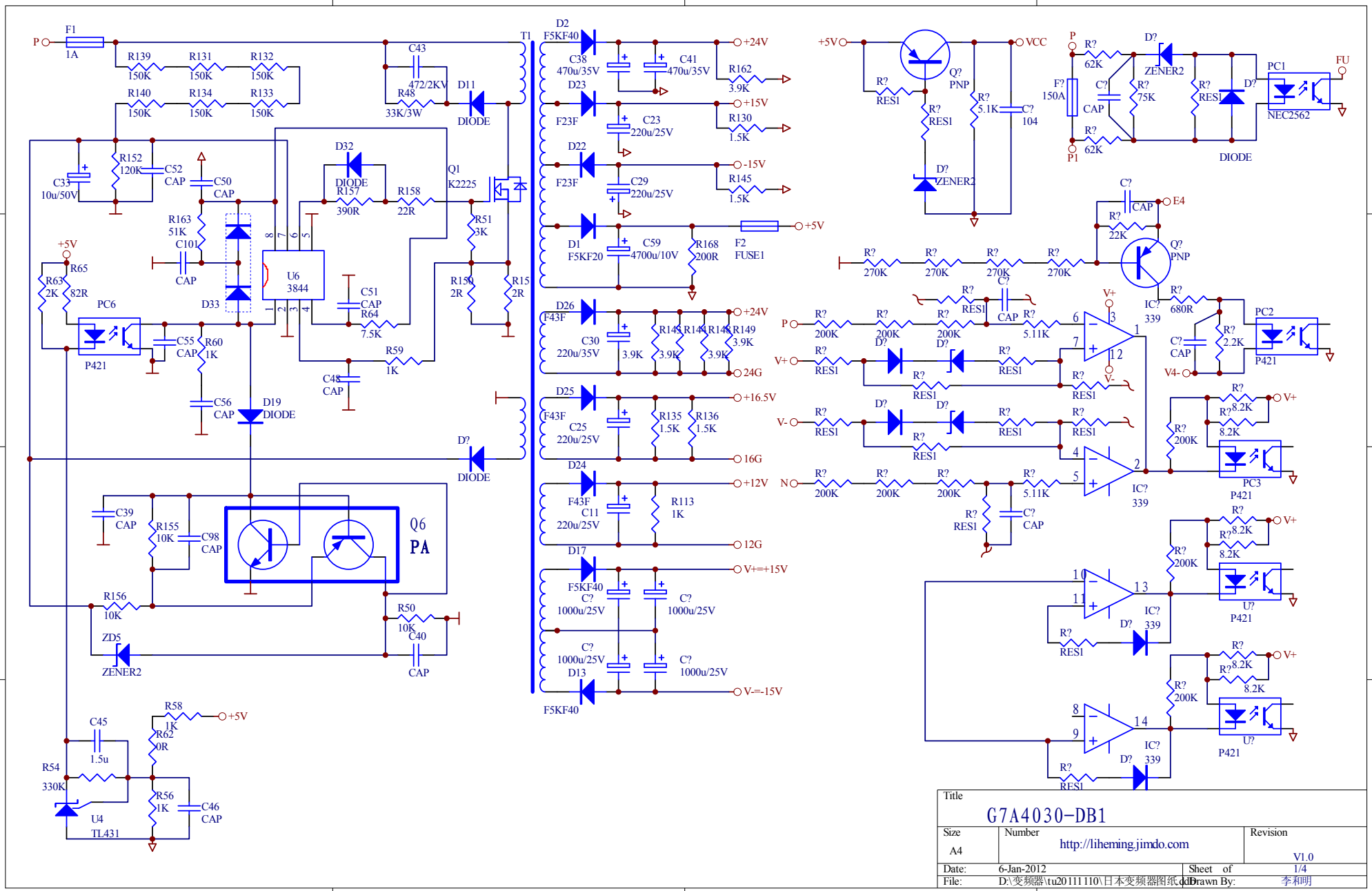

Title	G7A4030-DB1
Size	A4
Number	http://liheming.jimdo.com
Revision	V1.0
Date:	6-Jan-2012
Sheet of	1/4
File:	D:\变频器\tu20111110\日本变频器图纸.ddb
Drawn By:	李和明