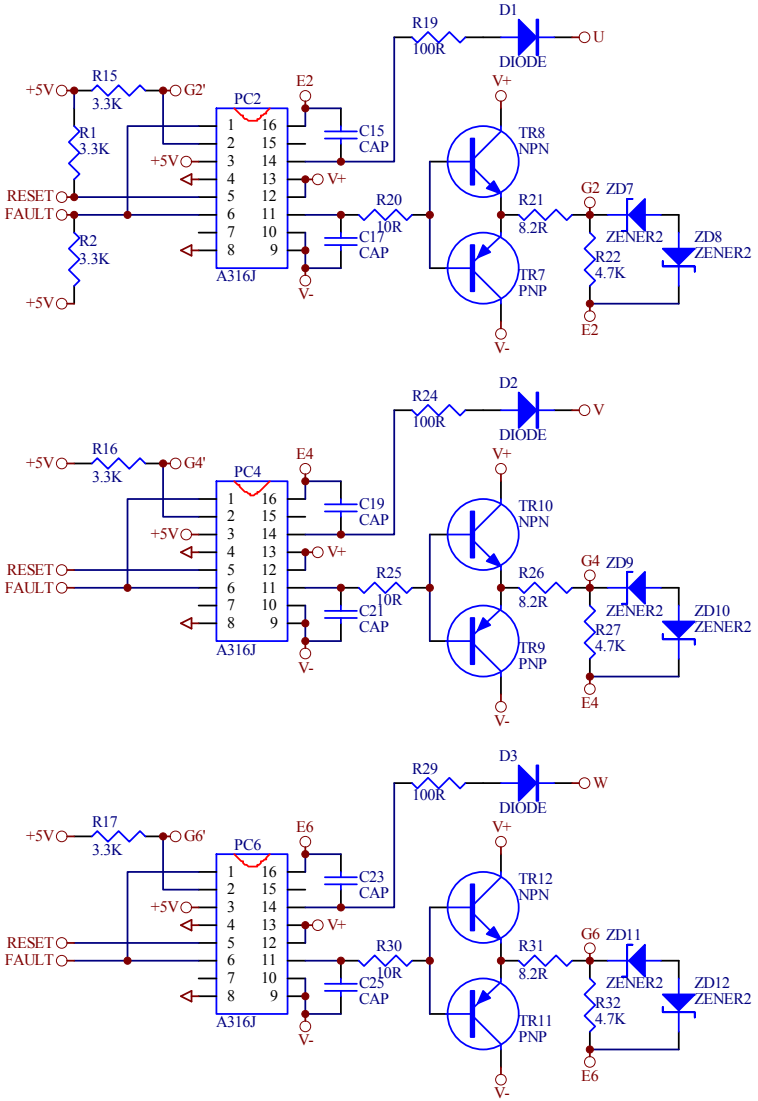

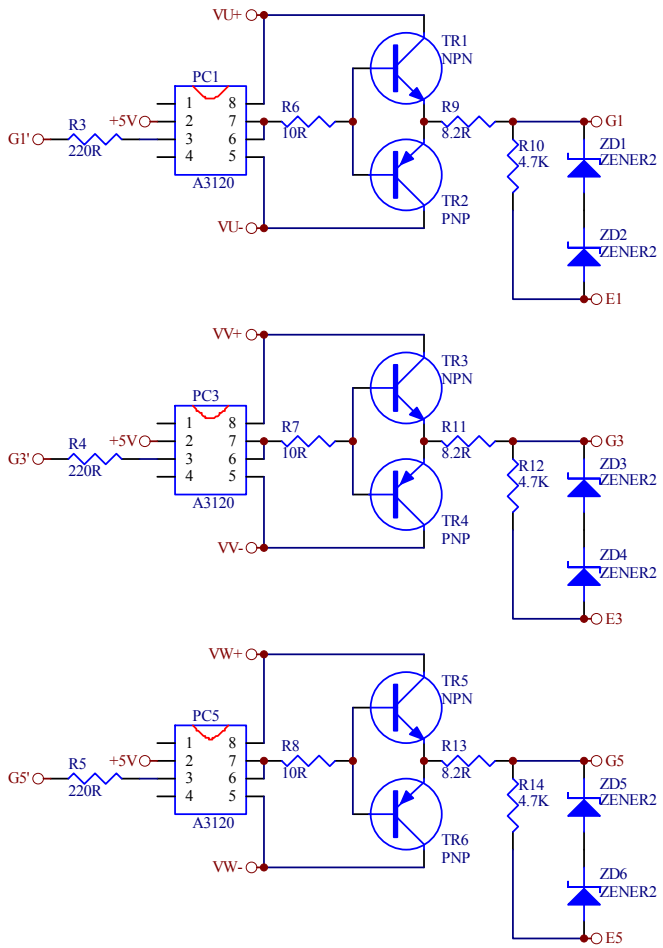

Title	SV150iS5-4-DB2		
Size A4	Number		Revision V1.0
Date:	7-Jan-2012	Sheet of	2/3
File:	D:\变频器\tu20111110\欧美变频器图纸.ddb	Drawn By:	李和明