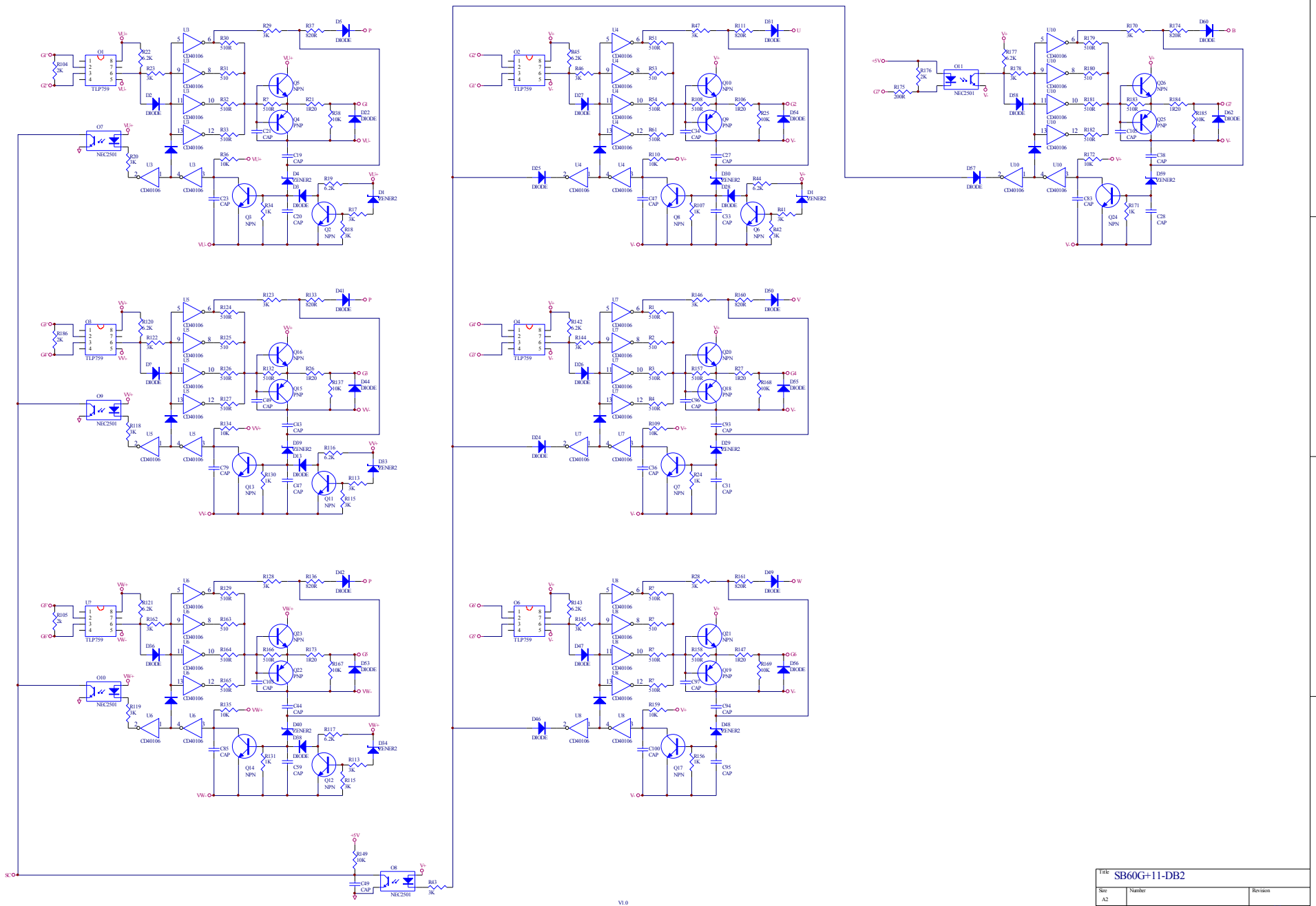
Title SB60G+11-DB2
Size A2
Number
Revision
Date: 7-Jan-2012
Sheet of 2/3
File: D:\变频器\m2011111\0国产变频器图纸.dsn
Drawn By: 李 阳明
V1.0