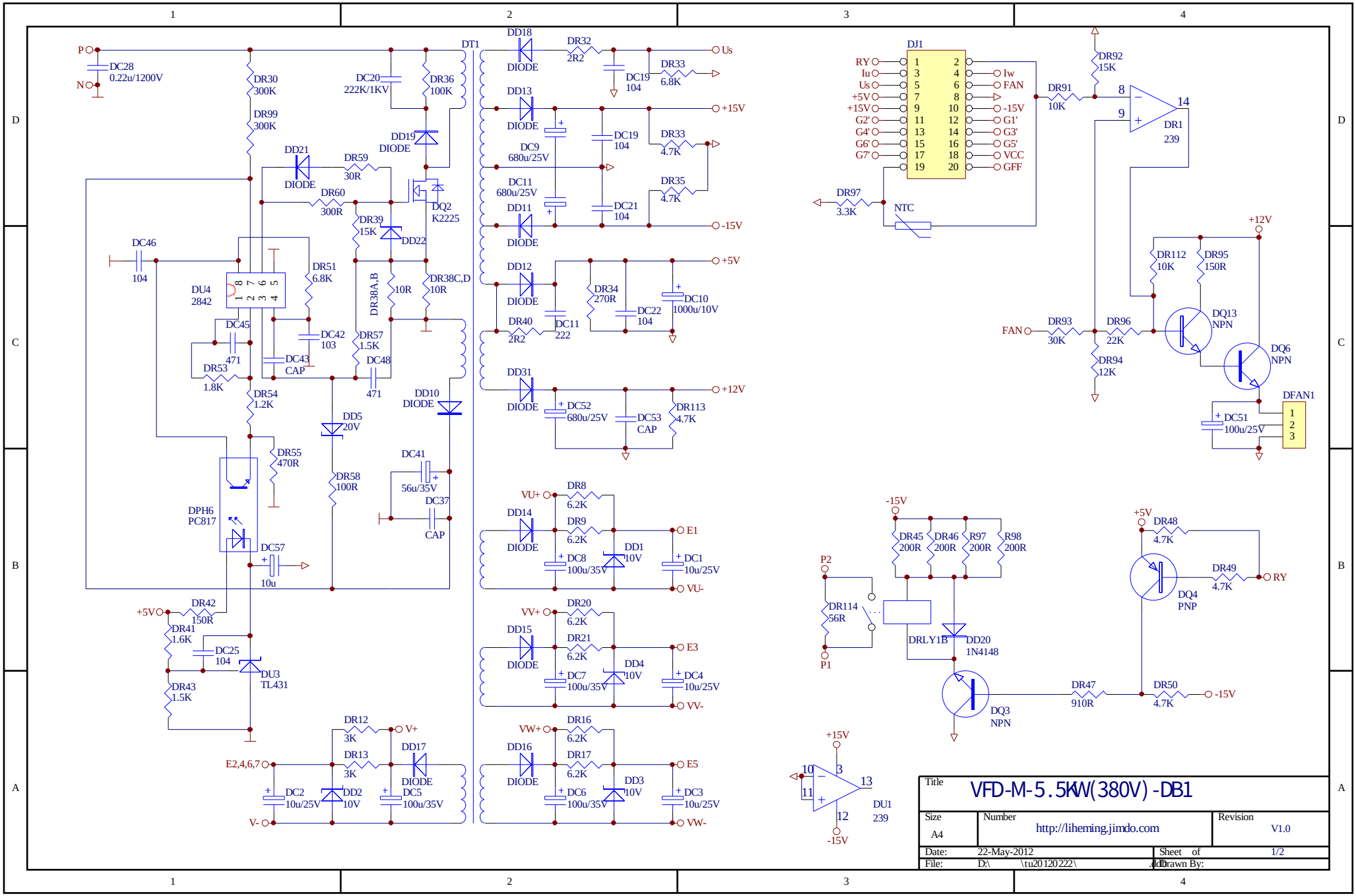
P
N
DC28
0.22u/1200V
DR30
300K
DR99
300K
DC20
222K/1KV
DR36
100K
DT1
DD18
DIODE
DR32
2R2
DC19
104
DR33
6.8K
Us
DD13
DIODE
DC9
680u/25V
DC19
104
DR33
4.7K
+15V
DD19
DIODE
DD21
DIODE
DR59
30R
DR60
300R
DC11
680u/25V
DR35
4.7K
DC21
104
DD11
DIODE
-15V
DQ2
K2225
DR39
15K
DD22
DC46
104
DU4
2842
DR51
6.8K
DR38A,B
10R
DR38C,D
10R
DD12
DIODE
DR34
270R
DC10
1000u/10V
+5V
DC45
471
DC42
103
DR57
1.5K
DR40
2R2
DC11
222
DC22
104
DR53
1.8K
DC43
CAP
DC48
471
DD31
DIODE
DC52
680u/25V
DC53
CAP
DR113
4.7K
+12V
DR54
1.2K
DD10
DIODE
DD5
20V
DR55
470R
DC41
56u/35V
DR58
100R
DC37
CAP
DPH6
PC817
DC57
10u
VU+
DR8
6.2K
DD14
DIODE
DR9
6.2K
DC8
100u/35V
DD1
10V
DC1
10u/25V
E1
VU-
+5V
DR42
150R
DR41
1.6K
DC25
104
DU3
TL431
DR43
1.5K
VV+
DR20
6.2K
DD15
DIODE
DR21
6.2K
DC7
100u/35V
DD4
10V
DC4
10u/25V
E3
VV-
DR12
3K
V+
DD17
DIODE
DR13
3K
E2,4,6,7
DC2
10u/25V
DD2
10V
DC5
100u/35V
V-
VW+
DR16
6.2K
DD16
DIODE
DR17
6.2K
DC6
100u/35V
DD3
10V
DC3
10u/25V
E5
VW-
DJ1
RY
Iu
Us
+5V
+15V
G2'
G4'
G6'
G7'
Iw
FAN
-15V
G1'
G3'
G5'
VCC
GFF
DR91
10K
DR92
15K
DR1
239
DR97
3.3K
NTC
+12V
DR112
10K
DR95
150R
DQ13
NPN
FAN
DR93
30K
DR96
22K
DR94
12K
DQ6
NPN
DFAN1
DC51
100u/25V
-15V
DR45
200R
DR46
200R
R97
200R
R98
200R
P2
DR114
56R
P1
DRLY1B
DD20
1N4148
DQ3
NPN
DR47
910R
DR50
4.7K
+5V
DR48
4.7K
DR49
4.7K
RY
DQ4
PNP
+15V
DU1
239
-15V
Title
VFD-M-5.5KW(380V)-DB1
Size
A4
Number
http://liheming.jimdo.com
Revision
V1.0
Date:
22-May-2012
Sheet of
1/2
File:
D:\ \tu20120222\
Drawn By: