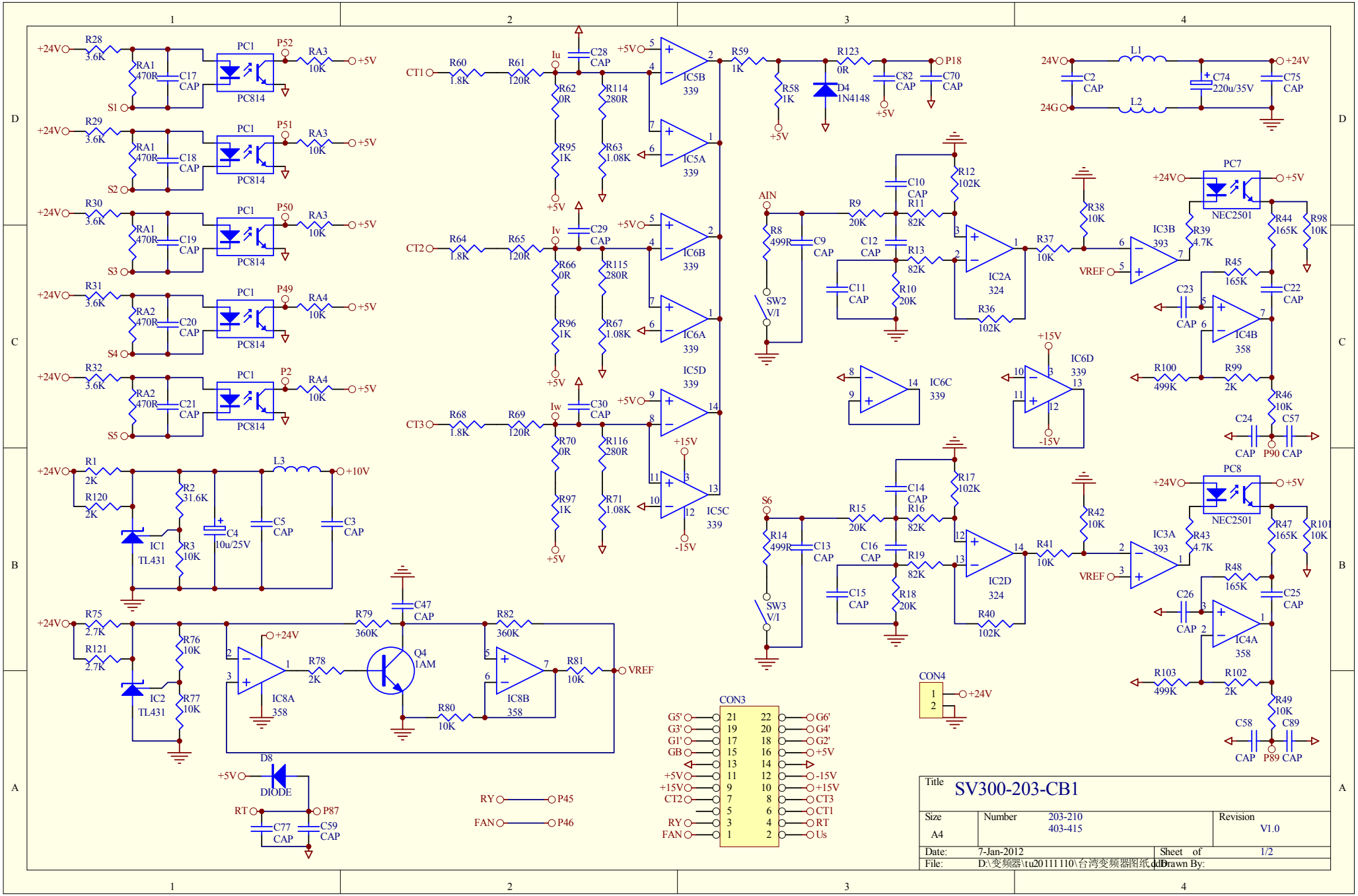
Title
SV300-203-CB1
Size
A4
Number
203-210
403-415
Revision
V1.0
Date: 7-Jan-2012
Sheet of 1/2
File: D:\变频器\tu20111110\台湾变频器图纸.ddb
Drawn By:
PC814
PC1
PC7
PC8
NEC2501
IC1 TL431
IC2 TL431
IC5B 339
IC5A 339
IC6B 339
IC6A 339
IC5D 339
IC5C 339
IC6C 339
IC6D 339
IC2A 324
IC2D 324
IC3B 393
IC3A 393
IC4B 358
IC4A 358
IC8A 358
IC8B 358
Q4 1AM
D4 1N4148
D8 DIODE
CON3
CON4
+24V
+5V
+15V
-15V
+10V
VREF
AIN
SW2 V/I
SW3 V/I
CT1
CT2
CT3
RY
FAN
RT
P45
P46
P87
P89
P90
P18
P52
P51
P50
P49
P2
S1
S2
S3
S4
S5
S6
24V
24G
L1
L2
L3
R28 3.6K
R29 3.6K
R30 3.6K
R31 3.6K
R32 3.6K
RA1 470R
RA2 470R
RA3 10K
RA4 10K
C17 CAP
C18 CAP
C19 CAP
C20 CAP
C21 CAP
R1 2K
R120 2K
R2 31.6K
R3 10K
C4 10u/25V
C5 CAP
C3 CAP
R75 2.7K
R121 2.7K
R76 10K
R77 10K
R78 2K
R79 360K
R80 10K
R81 10K
R82 360K
C47 CAP
C77 CAP
C59 CAP
R60 1.8K
R61 120R
R62 0R
R63 1.08K
R64 1.8K
R65 120R
R66 0R
R67 1.08K
R68 1.8K
R69 120R
R70 0R
R71 1.08K
R95 1K
R96 1K
R97 1K
R114 280R
R115 280R
R116 280R
C28 CAP
C29 CAP
C30 CAP
Iu
Iv
Iw
R59 1K
R58 1K
R123 0R
C82 CAP
C70 CAP
C2 CAP
C74 220u/35V
C75 CAP
R8 499R
R14 499R
C9 CAP
C13 CAP
R9 20K
R15 20K
C10 CAP
C11 CAP
C12 CAP
C14 CAP
C15 CAP
C16 CAP
R11 82K
R13 82K
R16 82K
R19 82K
R10 20K
R18 20K
R12 102K
R17 102K
R36 102K
R40 102K
R37 10K
R41 10K
R38 10K
R42 10K
R39 4.7K
R43 4.7K
R44 165K
R47 165K
R98 10K
R101 10K
R45 165K
R48 165K
C22 CAP
C25 CAP
C23 CAP
C26 CAP
R100 499K
R103 499K
R99 2K
R102 2K
R46 10K
R49 10K
C24 CAP
C57 CAP
C58 CAP
C89 CAP
G5'
G3'
G1'
GB
G6'
G4'
G2'
Us