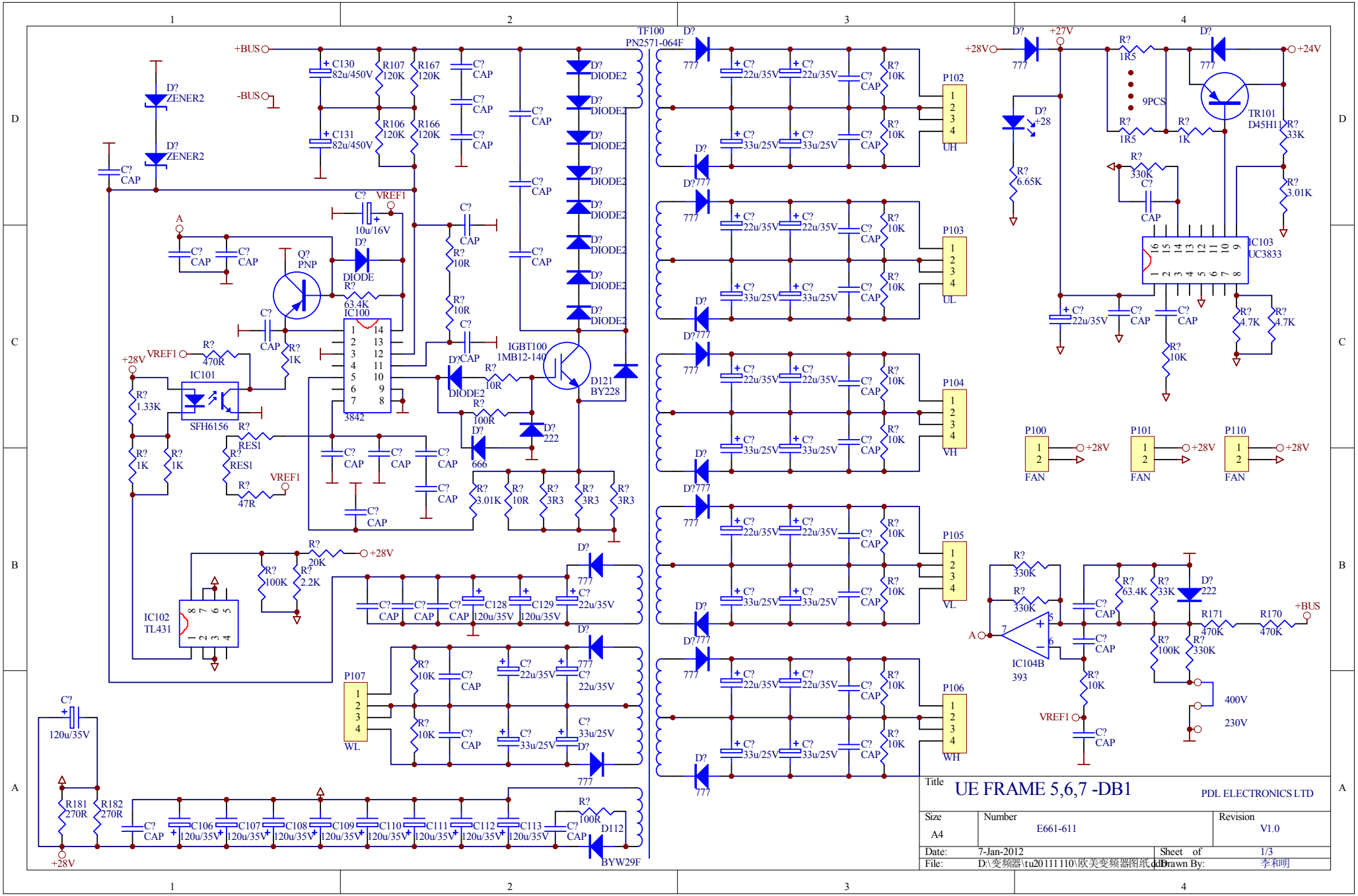
+BUS
-BUS
C130 82u/450V
C131 82u/450V
R107 120K
R106 120K
R167 120K
R166 120K
D? ZENER2
D? ZENER2
C? CAP
VREF1
10u/16V
Q? PNP
DIODE
R? 63.4K
IC100
3842
R? 470R
IC101
SFH6156
R? 1.33K
R? 1K
R? 1K
R? 1K
R? RES1
R? RES1
R? 47R
R? 10R
R? 10R
R? 100R
D? 666
D? 222
IGBT100 1MB12-140
D121 BY228
TF100 PN2571-064F
D? DIODE2
R? 3.01K
R? 10R
R? 3R3
R? 20K
R? 100K
R? 2.2K
IC102 TL431
C128 120u/35V
C129 120u/35V
C? 22u/35V
P107
WL
C? 120u/35V
R181 270R
R182 270R
C106 120u/35V
C107 120u/35V
C108 120u/35V
C109 120u/35V
C110 120u/35V
C111 120u/35V
C112 120u/35V
C113 120u/35V
R? 100R
D112 BYW29F
D? 777
C? 22u/35V
C? 33u/25V
R? 10K
P102
UH
P103
UL
P104
VH
P105
VL
P106
WH
+28V
+27V
+24V
D? +28
R? 6.65K
R? 1R5
9PCS
R? 1K
TR101 D45H11
R? 33K
R? 330K
R? 3.01K
IC103 UC3833
R? 4.7K
P100
P101
P110
FAN
IC104B 393
R? 63.4K
R? 33K
R171 470K
R170 470K
400V
230V
Title
UE FRAME 5,6,7 -DB1
PDL ELECTRONICS LTD
Size
A4
Number
E661-611
Revision
V1.0
Date: 7-Jan-2012
Sheet of 1/3
File: D:\变频器\tu20111110\欧美变频器图纸.ddb
Drawn By: 李和明