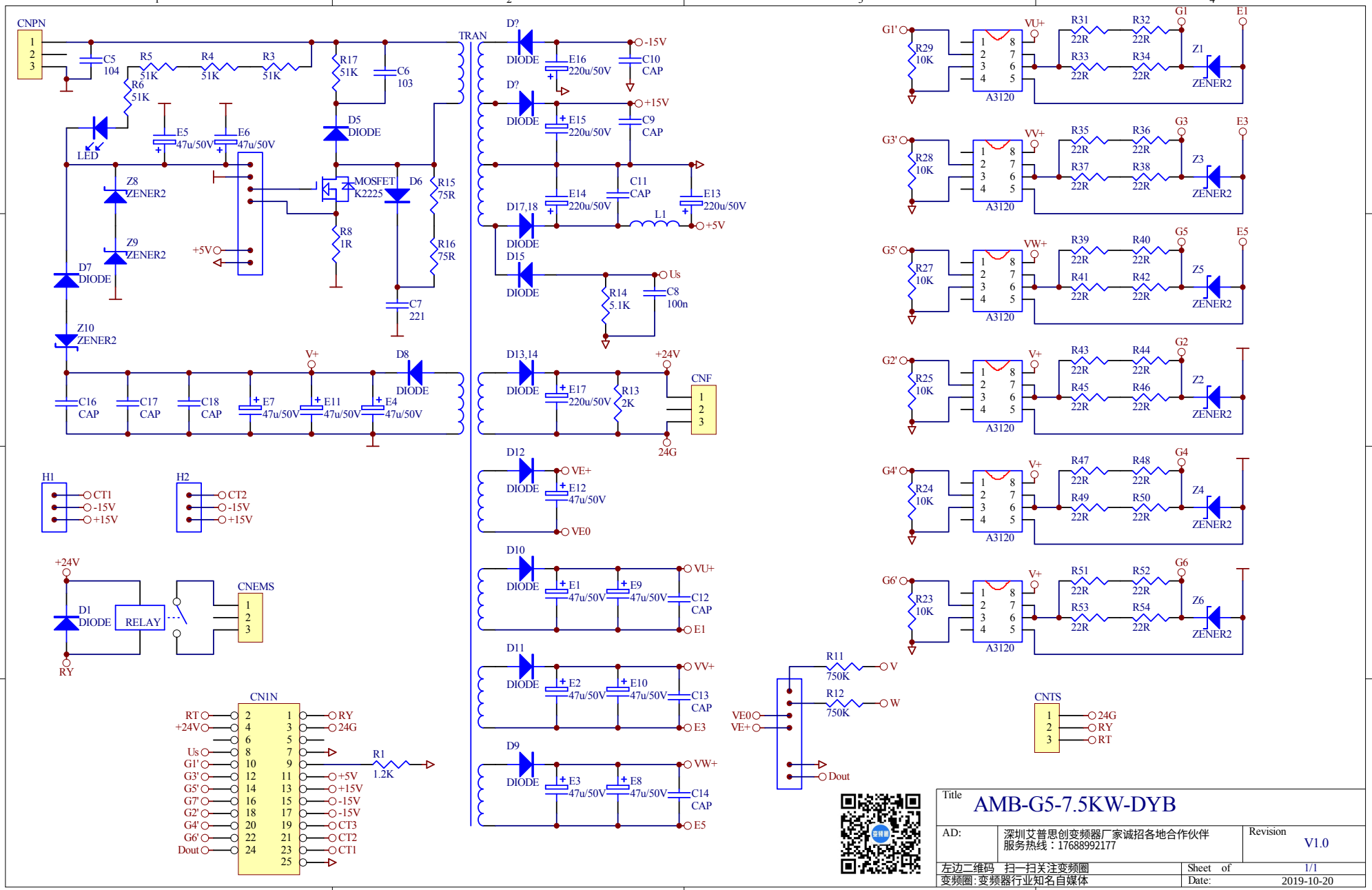
CNPN
TRAN
LED
MOSFET K2225
D5 DIODE
D6
D7 DIODE
D8 DIODE
Z8 ZENER2
Z9 ZENER2
Z10 ZENER2
C5 104
R5 51K
R4 51K
R3 51K
R6 51K
R17 51K
C6 103
E5 47u/50V
E6 47u/50V
R8 1R
R15 75R
R16 75R
C7 221
+5V
V+
C16 CAP
C17 CAP
C18 CAP
E7 47u/50V
E11 47u/50V
E4 47u/50V
D? DIODE
E16 220u/50V
C10 CAP
-15V
+15V
E15 220u/50V
C9 CAP
E14 220u/50V
C11 CAP
E13 220u/50V
L1
+5V
D17,18 DIODE
D15 DIODE
R14 5.1K
C8 100n
Us
D13,14 DIODE
E17 220u/50V
R13 2K
+24V
CNF
24G
D12 DIODE
E12 47u/50V
VE+
VE0
D10 DIODE
E1 47u/50V
E9 47u/50V
C12 CAP
VU+
E1
D11 DIODE
E2 47u/50V
E10 47u/50V
C13 CAP
VV+
E3
D9 DIODE
E3 47u/50V
E8 47u/50V
C14 CAP
VW+
E5
H1
CT1
-15V
+15V
H2
CT2
-15V
+15V
+24V
D1 DIODE
RELAY
RY
CNEMS
CN1N
RT
+24V
Us
G1'
G3'
G5'
G7'
G2'
G4'
G6'
Dout
RY
24G
+5V
+15V
-15V
-15V
CT3
CT2
CT1
R1 1.2K
G1'
R29 10K
A3120
VU+
R31 22R
R32 22R
R33 22R
R34 22R
G1
E1
Z1 ZENER2
G3'
R28 10K
VV+
R35 22R
R36 22R
R37 22R
R38 22R
G3
E3
Z3 ZENER2
G5'
R27 10K
VW+
R39 22R
R40 22R
R41 22R
R42 22R
G5
E5
Z5 ZENER2
G2'
R25 10K
V+
R43 22R
R44 22R
R45 22R
R46 22R
G2
Z2 ZENER2
G4'
R24 10K
V+
R47 22R
R48 22R
R49 22R
R50 22R
G4
Z4 ZENER2
G6'
R23 10K
V+
R51 22R
R52 22R
R53 22R
R54 22R
G6
Z6 ZENER2
R11 750K
R12 750K
V
W
VE0
VE+
Dout
CNTS
24G
RY
RT
Title
AMB-G5-7.5KW-DYB
AD:
深圳艾普思创变频器厂家诚招各地合作伙伴
服务热线：17688992177
Revision
V1.0
左边二维码 扫一扫关注变频圈
变频圈:变频器行业知名自媒体
Sheet of 1/1
Date: 2019-10-20