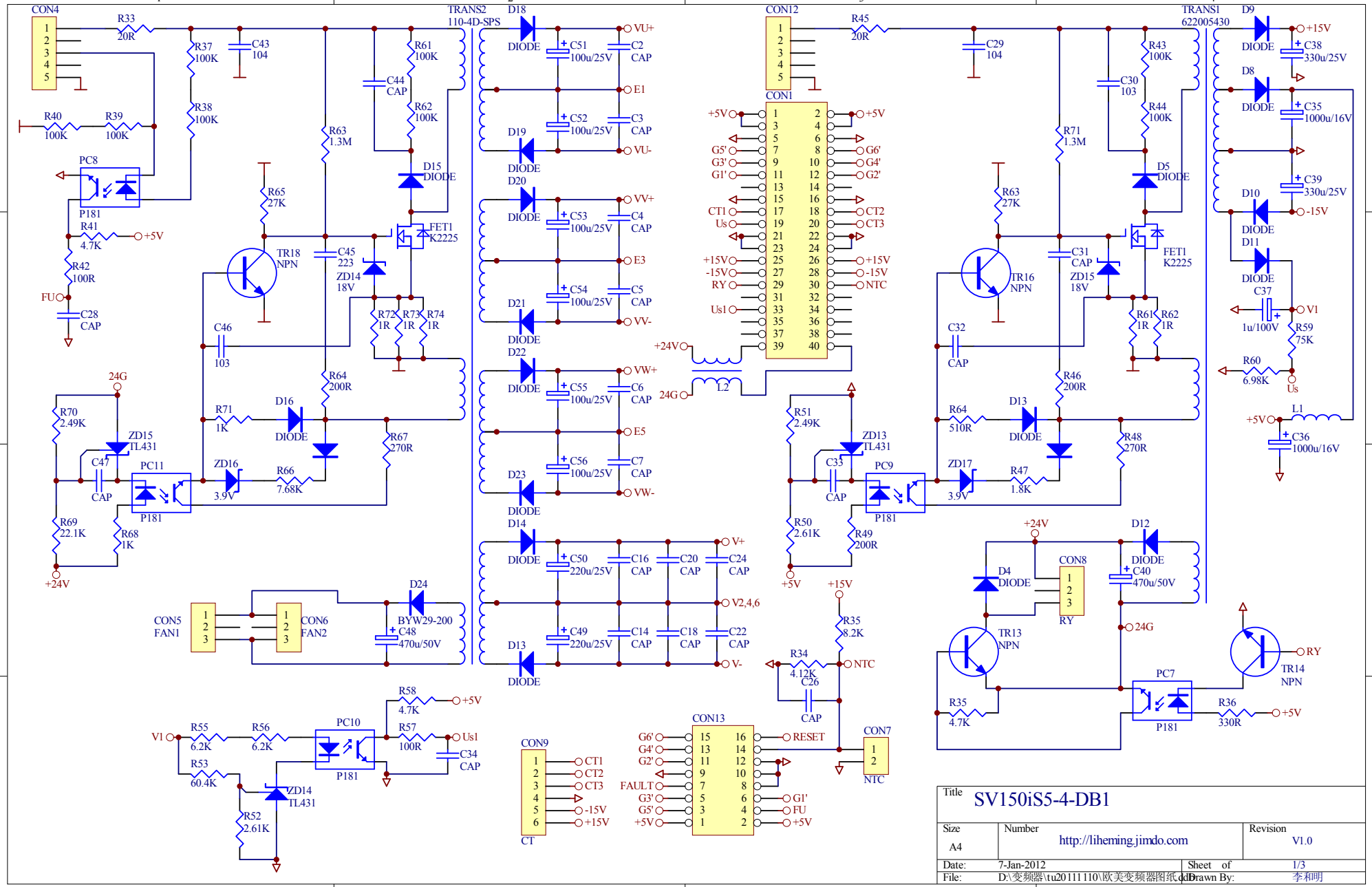
CON4
R33 20R
R37 100K
C43 104
R38 100K
R40 100K
R39 100K
PC8
P181
R41 4.7K
+5V
R42 100R
FU
C28 CAP
R61 100K
C44 CAP
R62 100K
R63 1.3M
D15 DIODE
FET1 K2225
R65 27K
TR18 NPN
C45 223
ZD14 18V
R72 1R
R73 1R
R74 1R
C46 103
R64 200R
24G
R70 2.49K
ZD15 TL431
C47 CAP
PC11
R71 1K
D16 DIODE
ZD16 3.9V
R66 7.68K
R67 270R
R69 22.1K
R68 1K
+24V
CON5 FAN1
CON6 FAN2
D24 BYW29-200
C48 470u/50V
TRANS2 110-4D-SPS
D18 DIODE
C51 100u/25V
C2 CAP
VU+
E1
C52 100u/25V
C3 CAP
VU-
D19 DIODE
D20 DIODE
C53 100u/25V
C4 CAP
VV+
E3
C54 100u/25V
C5 CAP
VV-
D21 DIODE
D22 DIODE
C55 100u/25V
C6 CAP
VW+
E5
C56 100u/25V
C7 CAP
VW-
D23 DIODE
D14 DIODE
C50 220u/25V
C16 CAP
C20 CAP
C24 CAP
V+
V2,4,6
C49 220u/25V
C14 CAP
C18 CAP
C22 CAP
V-
D13 DIODE
R58 4.7K
+5V
V1
R55 6.2K
R56 6.2K
PC10
R57 100R
Us1
C34 CAP
R53 60.4K
ZD14 TL431
R52 2.61K
P181
CON9
CT1
CT2
CT3
-15V
+15V
CT
CON13
RESET
FAULT
G1'
FU
+5V
CON7
NTC
CON12
R45 20R
C29 104
CON1
+5V
G5'
G3'
G1'
G6'
G4'
G2'
CT1
Us
CT2
CT3
+15V
-15V
RY
NTC
Us1
+24V
24G
L2
R51 2.49K
ZD13 TL431
C33 CAP
PC9
P181
R50 2.61K
R49 200R
+5V
+15V
R35 8.2K
R34 4.12K
NTC
C26 CAP
C30 103
R43 100K
R44 100K
R71 1.3M
D5 DIODE
R63 27K
TR16 NPN
C31 CAP
ZD15 18V
FET1 K2225
R61 1R
R62 1R
C32 CAP
R46 200R
R64 510R
D13 DIODE
R48 270R
ZD17 3.9V
R47 1.8K
+24V
D12 DIODE
D4 DIODE
CON8
RY
C40 470u/50V
24G
TR13 NPN
PC7
P181
R35 4.7K
R36 330R
+5V
RY
TR14 NPN
TRANS1 622005430
D9 DIODE
+15V
C38 330u/25V
D8 DIODE
C35 1000u/16V
C39 330u/25V
-15V
D10 DIODE
D11 DIODE
C37 1u/100V
V1
R59 75K
R60 6.98K
Us
+5V
L1
C36 1000u/16V
Title
SV150iS5-4-DB1
Size
A4
Number
http://liheming.jimdo.com
Revision
V1.0
Date: 7-Jan-2012
Sheet of 1/3
File: D:\变频器\tu20111110\欧美变频器图纸.ddb
Drawn By: 李和明