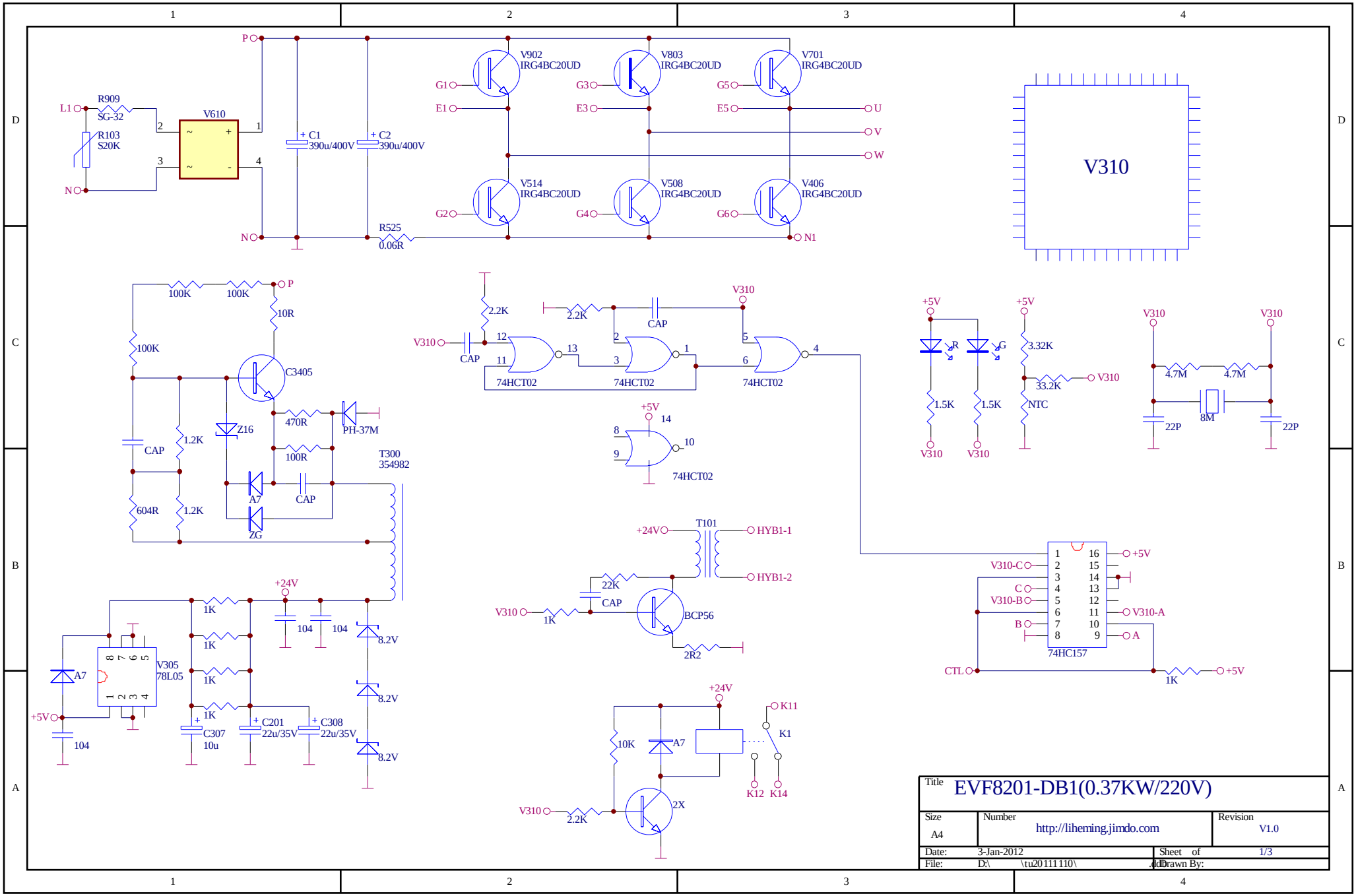
P
L1
R909
SG-32
R103
S20K
N
V610
C1
390u/400V
C2
390u/400V
R525
0.06R
V902
IRG4BC20UD
V803
IRG4BC20UD
V701
IRG4BC20UD
V514
IRG4BC20UD
V508
IRG4BC20UD
V406
IRG4BC20UD
G1
E1
G3
E3
G5
E5
G2
G4
G6
N1
U
V
W
V310
100K
100K
10R
C3405
Z16
470R
PH-37M
100R
T300
354982
A7
ZG
CAP
1.2K
604R
2.2K
74HCT02
+5V
R
G
1.5K
3.32K
33.2K
NTC
4.7M
8M
22P
T101
+24V
HYB1-1
HYB1-2
22K
BCP56
2R2
74HC157
V310-C
V310-B
V310-A
CTL
1K
V305
78L05
104
8.2V
C307
10u
C201
22u/35V
C308
22u/35V
10K
2X
K11
K1
K12
K14
Title
EVF8201-DB1(0.37KW/220V)
Size
A4
Number
http://liheming.jimdo.com
Revision
V1.0
Date:
3-Jan-2012
Sheet of
1/3
File:
D:\ \tu20111110\
Drawn By: