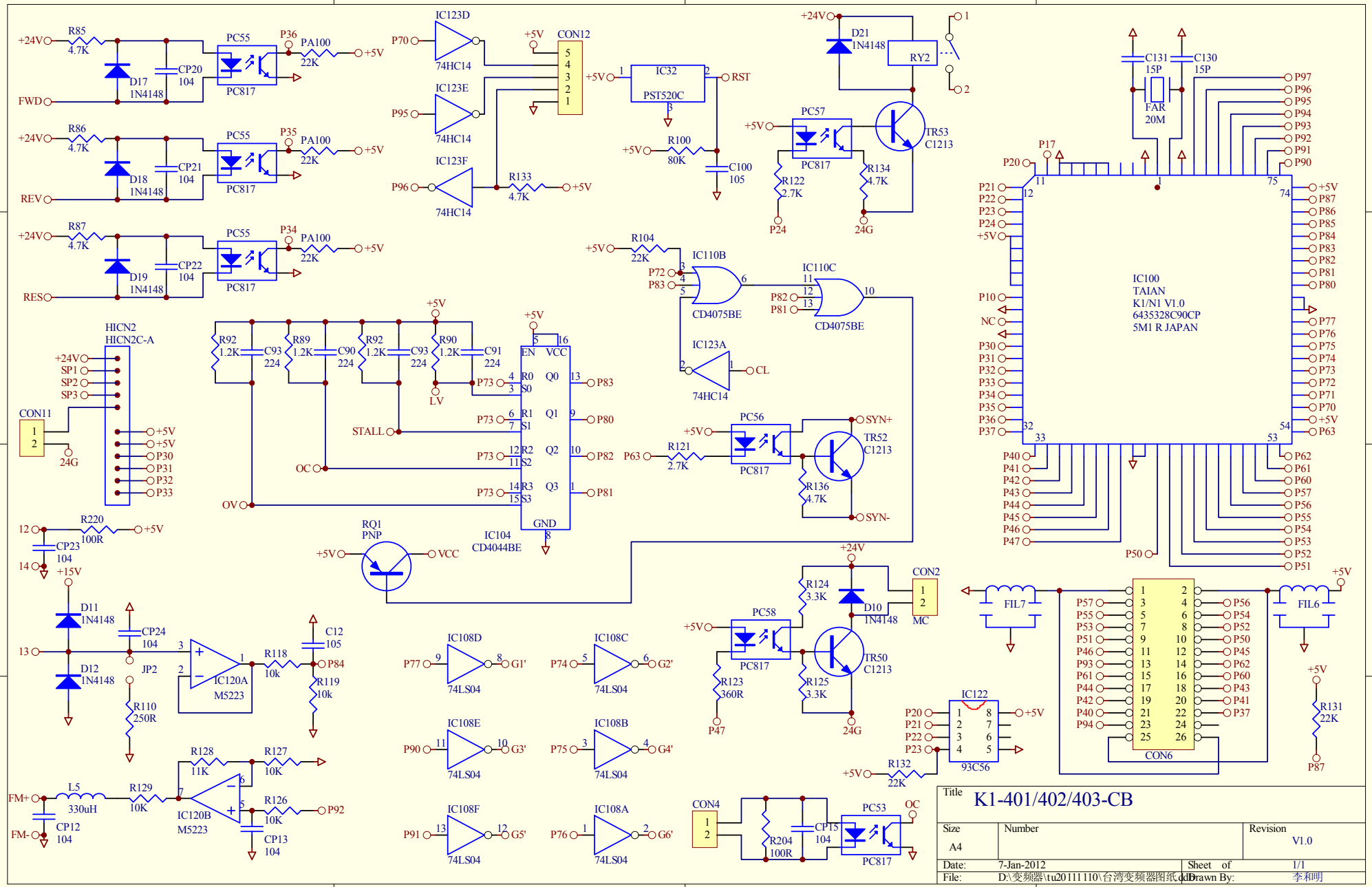
K1-401/402/403-CB
Size A4
Number
Revision V1.0
Date: 7-Jan-2012
Sheet of 1/1
File: D:\变频器\tu20111110\台湾变频器图纸.ddb
Drawn By: 李和明
IC100
TAIAN
K1/N1 V1.0
6435328C90CP
5M1 R JAPAN
IC104
CD4044BE
IC120A
M5223
IC120B
M5223
IC122
93C56
CON6
CON11
CON12
CON2
CON4
HICN2
HICN2C-A
IC32
PST520C
IC110B
IC110C
CD4075BE
IC123A
IC123D
IC123E
IC123F
74HC14
IC108A
IC108B
IC108C
IC108D
IC108E
IC108F
74LS04
RY2
FAR
20M
C131
15P
C130
15P
FIL7
FIL6
RQ1
PNP
JP2
FWD
REV
RES
STALL
OC
OV
LV
CL
SYN+
SYN-
MC
FM+
FM-
+24V
+5V
+15V
24G