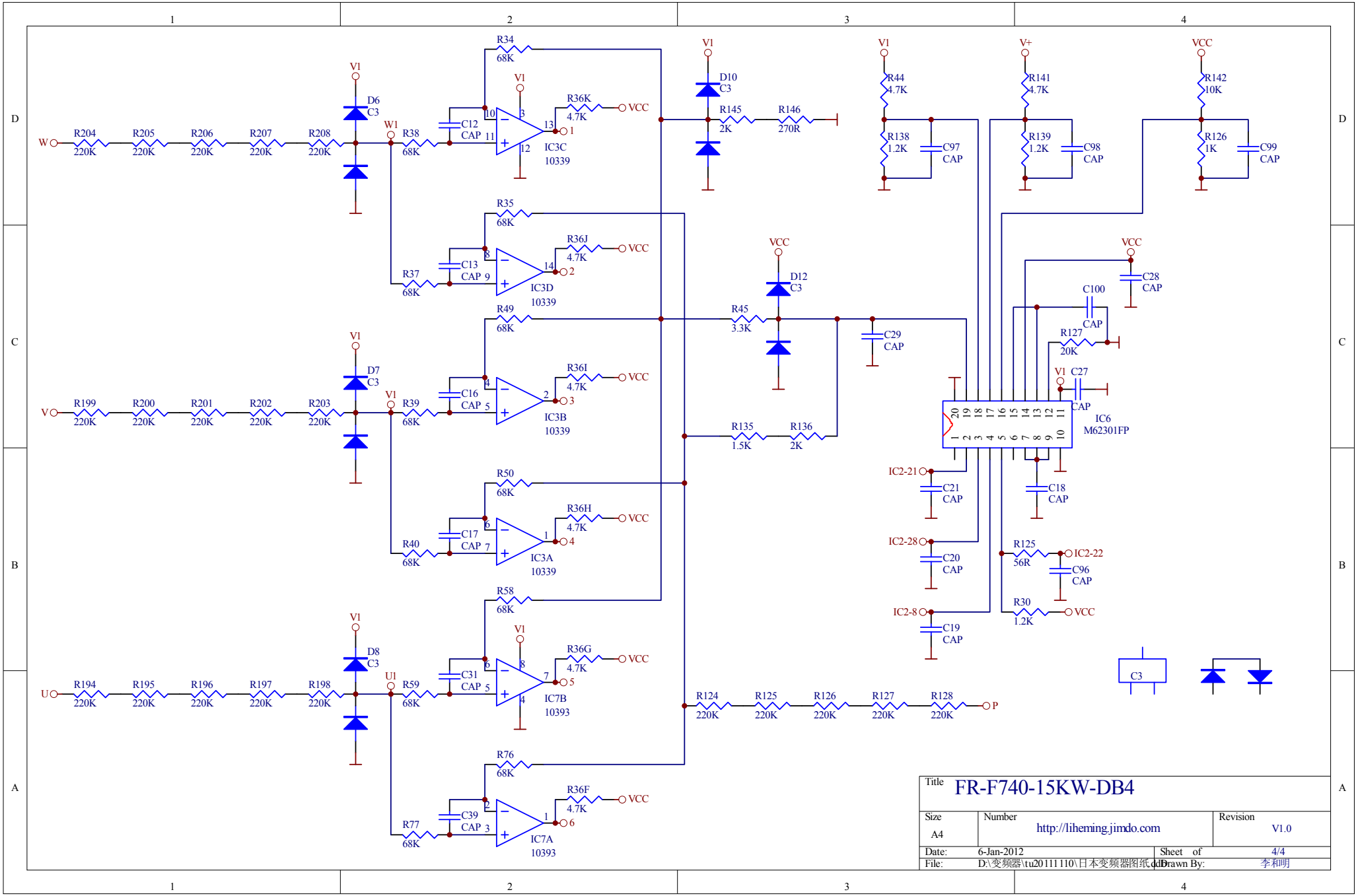

Title	FR-F740-15KW-DB4	
Size A4	Number http://liheming.jimdo.com	Revision V1.0
Date: 6-Jan-2012	Sheet of 4/4	
File: D:\变频器\tu20111110\日本变频器图纸.ddb	Drawn By: 李和明	