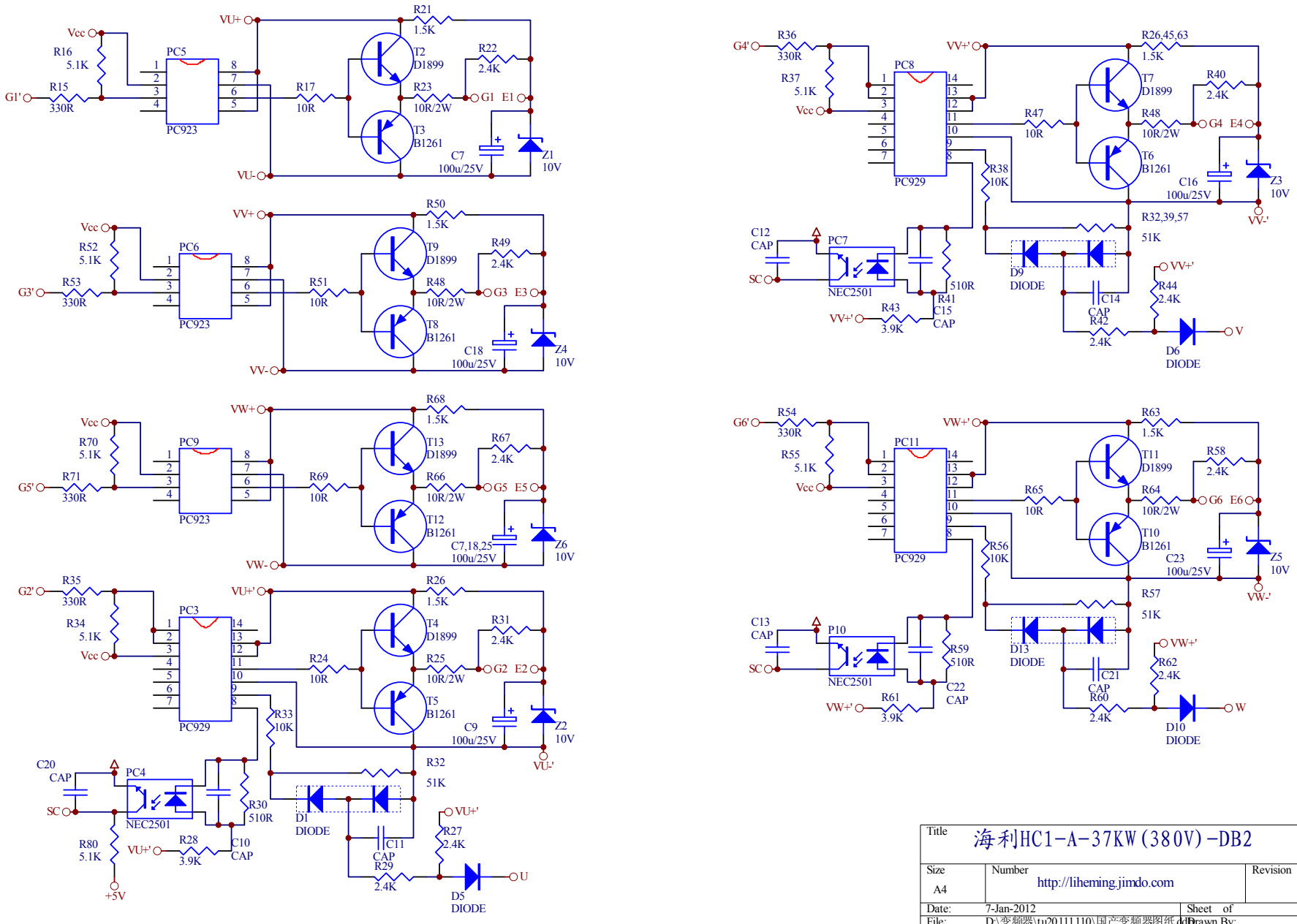
Vcc
R16
5.1K
R15
330R
G1'
PC5
PC923
VU+
VU-
R21
1.5K
T2
D1899
T3
B1261
R17
10R
R22
2.4K
R23
10R/2W
G1 E1
C7
100u/25V
Z1
10V
Vcc
R52
5.1K
R53
330R
G3'
PC6
PC923
VV+
VV-
R50
1.5K
T9
D1899
T8
B1261
R51
10R
R49
2.4K
R48
10R/2W
G3 E3
C18
100u/25V
Z4
10V
Vcc
R70
5.1K
R71
330R
G5'
PC9
PC923
VW+
VW-
R68
1.5K
T13
D1899
T12
B1261
R69
10R
R67
2.4K
R66
10R/2W
G5 E5
C7,18,25
100u/25V
Z6
10V
G2'
R35
330R
R34
5.1K
Vcc
PC3
PC929
VU+'
VU-'
R26
1.5K
T4
D1899
T5
B1261
R24
10R
R31
2.4K
R25
10R/2W
G2 E2
C9
100u/25V
Z2
10V
R33
10K
R32
51K
C20
CAP
SC
PC4
NEC2501
R30
510R
D1
DIODE
C11
CAP
R29
2.4K
VU+'
R27
2.4K
U
D5
DIODE
R80
5.1K
+5V
VU+'
R28
3.9K
C10
CAP
G4'
R36
330R
R37
5.1K
Vcc
PC8
PC929
VV+'
R26,45,63
1.5K
T7
D1899
T6
B1261
R47
10R
R40
2.4K
R48
10R/2W
G4 E4
C16
100u/25V
Z3
10V
VV-'
R38
10K
R32,39,57
51K
C12
CAP
SC
PC7
NEC2501
510R
R41
C15
CAP
VV+'
R43
3.9K
D9
DIODE
C14
CAP
R42
2.4K
VV+'
R44
2.4K
V
D6
DIODE
G6'
R54
330R
R55
5.1K
Vcc
PC11
PC929
VW+'
R63
1.5K
T11
D1899
T10
B1261
R65
10R
R58
2.4K
R64
10R/2W
G6 E6
C23
100u/25V
Z5
10V
VW-'
R56
10K
R57
51K
C13
CAP
SC
P10
NEC2501
R59
510R
C22
CAP
VW+'
R61
3.9K
D13
DIODE
C21
CAP
R60
2.4K
VW+'
R62
2.4K
W
D10
DIODE
Title
海利HC1-A-37KW(380V)-DB2
Size
A4
Number
http://liheming.jimdo.com
Revision
V1.0
Date:
7-Jan-2012
Sheet of
2/2
File:
D:\变频器\tu20111110\国产变频器图纸.ddb
Drawn By:
李和明