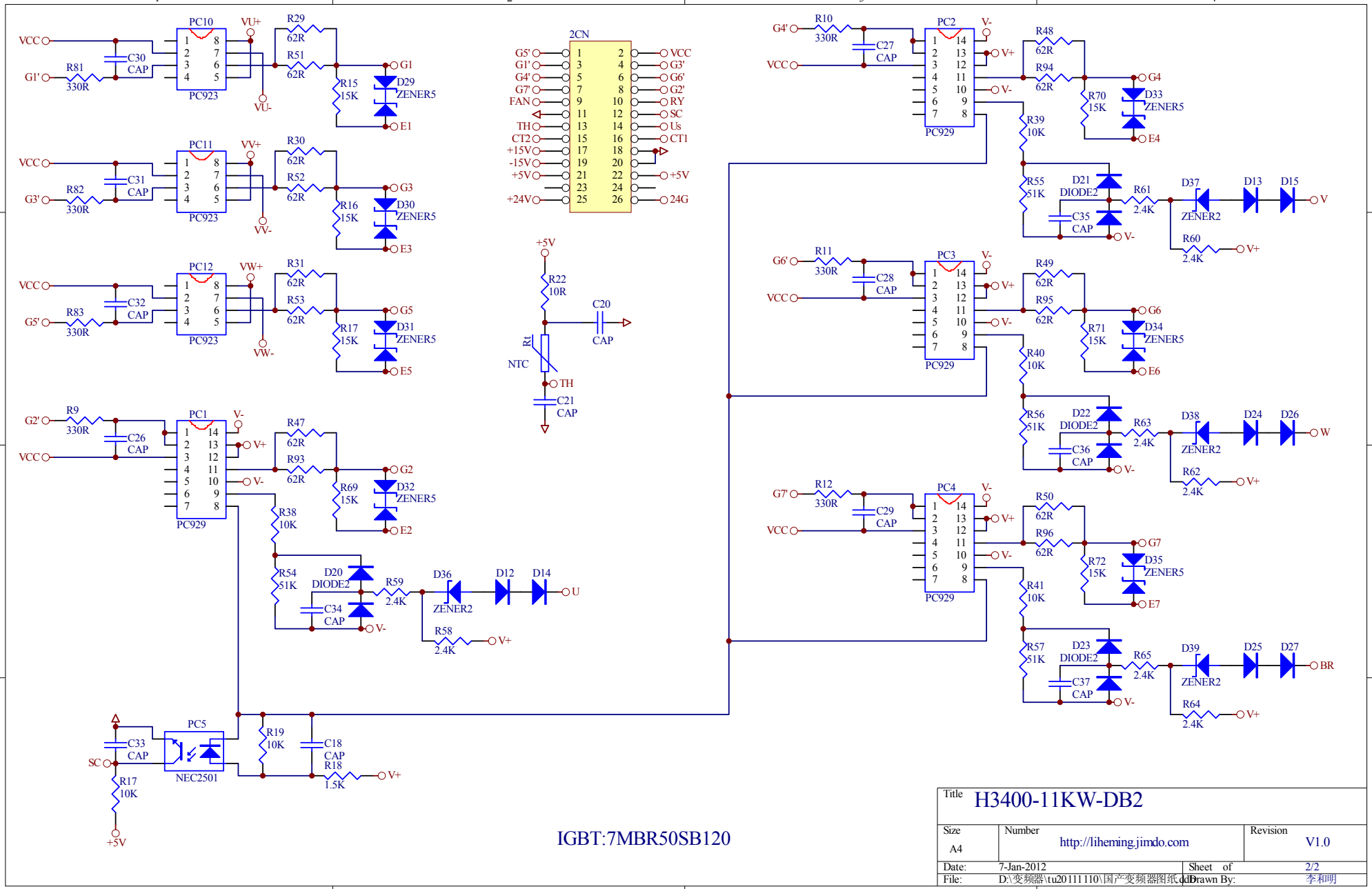
PC10
PC923
VU+
VU-
R29 62R
R51 62R
R15 15K
D29 ZENER5
G1
E1
VCC
G1'
R81 330R
C30 CAP
PC11
PC923
VV+
VV-
R30 62R
R52 62R
R16 15K
D30 ZENER5
G3
E3
VCC
G3'
R82 330R
C31 CAP
PC12
PC923
VW+
VW-
R31 62R
R53 62R
R17 15K
D31 ZENER5
G5
E5
VCC
G5'
R83 330R
C32 CAP
PC1
PC929
V-
V+
V-
R47 62R
R93 62R
R69 15K
D32 ZENER5
G2
E2
G2'
R9 330R
C26 CAP
VCC
R38 10K
R54 51K
D20 DIODE2
C34 CAP
R59 2.4K
D36 ZENER2
D12
D14
U
R58 2.4K
V+
PC5
NEC2501
C33 CAP
SC
R17 10K
+5V
R19 10K
C18 CAP
R18 1.5K
V+
2CN
G5'
G1'
G4'
G7'
FAN
TH
CT2
+15V
-15V
+5V
+24V
VCC
G3'
G6'
G2'
RY
SC
Us
CT1
+5V
24G
+5V
R22 10R
C20 CAP
Rt
NTC
TH
C21 CAP
PC2
PC929
G4'
R10 330R
C27 CAP
VCC
V-
V+
V-
R48 62R
R94 62R
R70 15K
D33 ZENER5
G4
E4
R39 10K
R55 51K
D21 DIODE2
C35 CAP
R61 2.4K
D37 ZENER2
D13
D15
V
R60 2.4K
V+
PC3
PC929
G6'
R11 330R
C28 CAP
VCC
V+
V-
R49 62R
R95 62R
R71 15K
D34 ZENER5
G6
E6
R40 10K
R56 51K
D22 DIODE2
C36 CAP
R63 2.4K
D38 ZENER2
D24
D26
W
R62 2.4K
V+
PC4
PC929
G7'
R12 330R
C29 CAP
VCC
V+
V-
R50 62R
R96 62R
R72 15K
D35 ZENER5
G7
E7
R41 10K
R57 51K
D23 DIODE2
C37 CAP
R65 2.4K
D39 ZENER2
D25
D27
BR
R64 2.4K
V+
IGBT:7MBR50SB120
Title
H3400-11KW-DB2
Size
A4
Number
http://liheming.jimdo.com
Revision
V1.0
Date:
7-Jan-2012
Sheet of
2/2
File:
D:\变频器\tu20111110\国产变频器图纸.ddb
Drawn By:
李和明