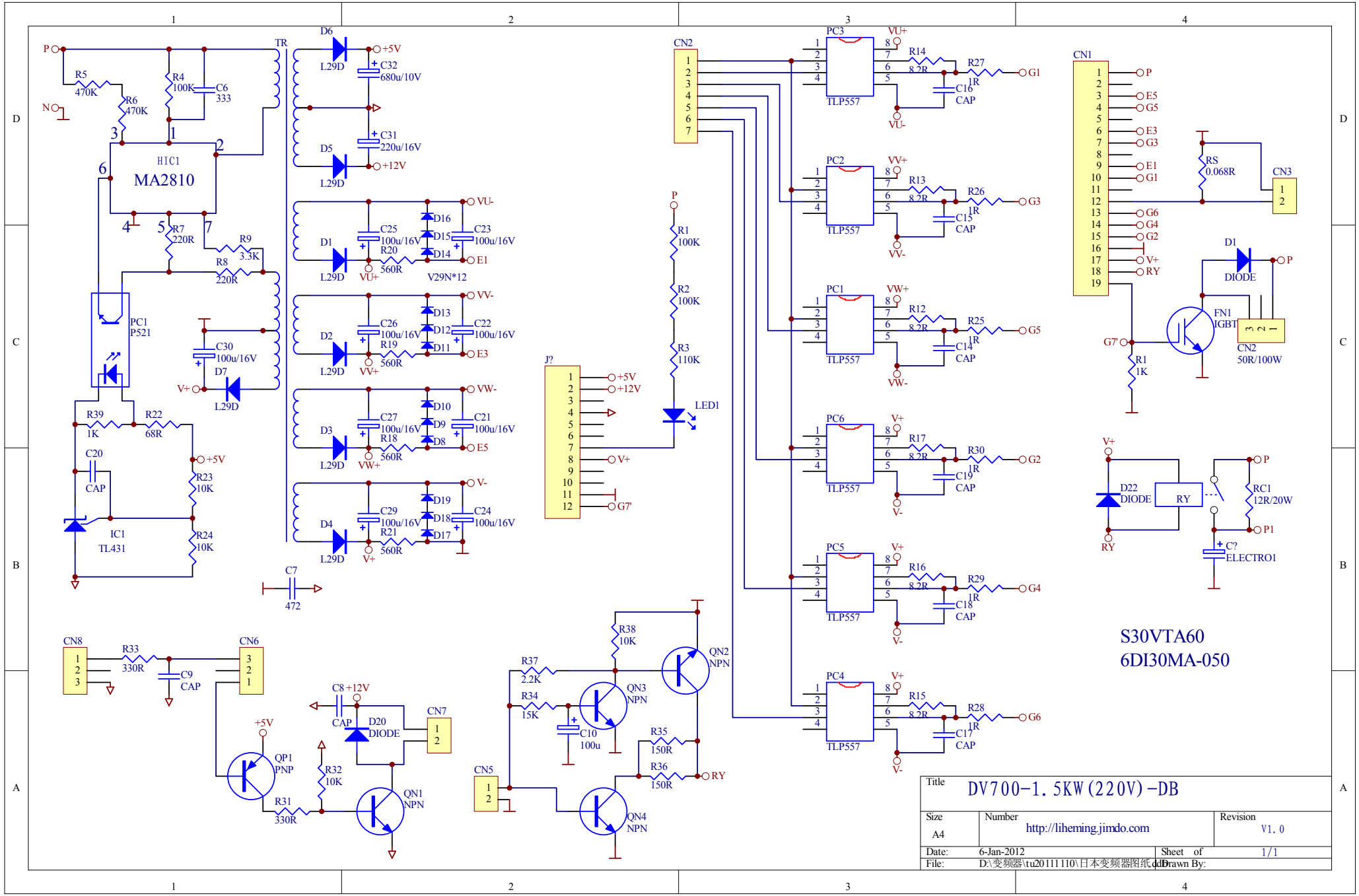
HIC1
MA2810
TR
PC1
P521
IC1
TL431
CN2
CN1
CN3
CN2
50R/100W
FN1
IGBT
DIODE
RY
RC1
12R/20W
ELECTRO1
CN8
CN6
CN7
CN5
J?
LED1
QP1
PNP
QN1
NPN
QN2
NPN
QN3
NPN
QN4
NPN
PC3
PC2
PC1
PC6
PC5
PC4
TLP557
S30VTA60
6DI30MA-050
Title
DV700-1.5KW(220V)-DB
Size
A4
Number
http://liheming.jimdo.com
Revision
V1.0
Date:
6-Jan-2012
Sheet of
1/1
File:
D:\变频器\tu20111110\日本变频器图纸.ddb
Drawn By: