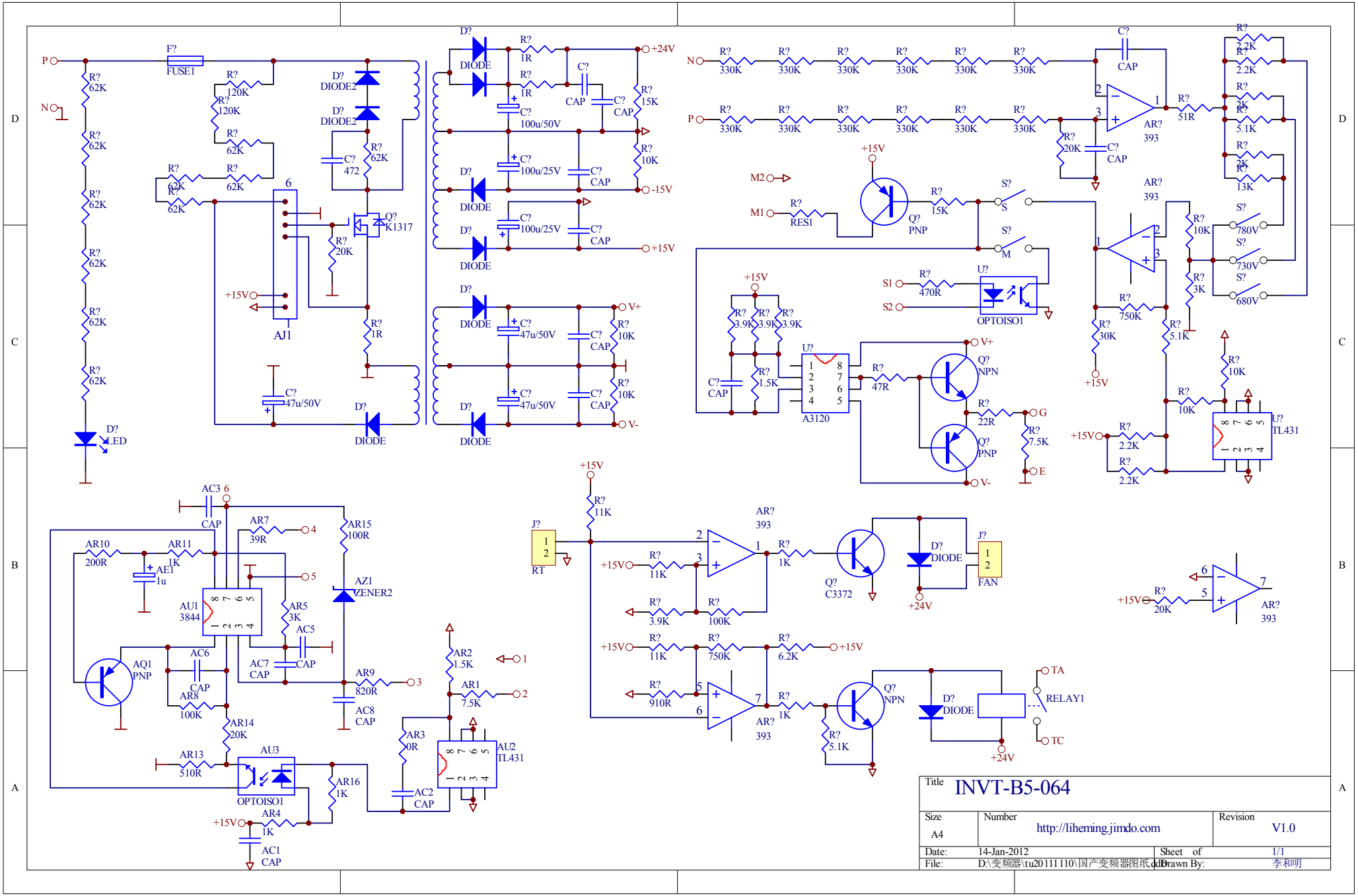
P
N
F?
FUSE1
R? 62K
R? 120K
D? DIODE2
C? 472
Q? K1317
R? 20K
R? 1R
AJ1
+15V
C? 47u/50V
D? DIODE
D? LED
D? DIODE
R? 1R
C? 100u/50V
C? CAP
R? 15K
R? 10K
+24V
-15V
+15V
C? 100u/25V
C? 47u/50V
V+
V-
R? 330K
R? 20K
C? CAP
AR? 393
R? 51R
R? 2.2K
R? 5.1K
R? 2K
R? 13K
R? 3K
R? 750K
R? 30K
R? 5.1K
R? 10K
S? 780V
S? 730V
S? 680V
M2
M1
R? RES1
Q? PNP
S? S
S? M
S1
S2
R? 470R
U? OPTOISO1
R? 3.9K
R? 1.5K
U? A3120
R? 47R
Q? NPN
R? 22R
R? 7.5K
G
E
U? TL431
R? 2.2K
AC3 6
AR7 39R
AR15 100R
AR10 200R
AR11 1K
AE1 1u
AU1 3844
AR5 3K
AC5
AZ1 ZENER2
AC6
AC7
AR9 820R
AC8
AQ1 PNP
AR8 100K
AR14 20K
AR13 510R
AU3
OPTOISO1
AR16 1K
AR4 1K
AC1
AR2 1.5K
AR1 7.5K
AR3 0R
AC2
AU2 TL431
J? RT
R? 11K
R? 1K
Q? C3372
D? DIODE
J? FAN
R? 3.9K
R? 100K
R? 750K
R? 6.2K
R? 910R
R? 5.1K
R? 20K
TA
TC
RELAY1
Title INVT-B5-064
Size A4
Number http://liheming.jimdo.com
Revision V1.0
Date: 14-Jan-2012
Sheet of 1/1
File: D:\变频器\tu20111110\国产变频器图纸.ddb
Drawn By: 李和明