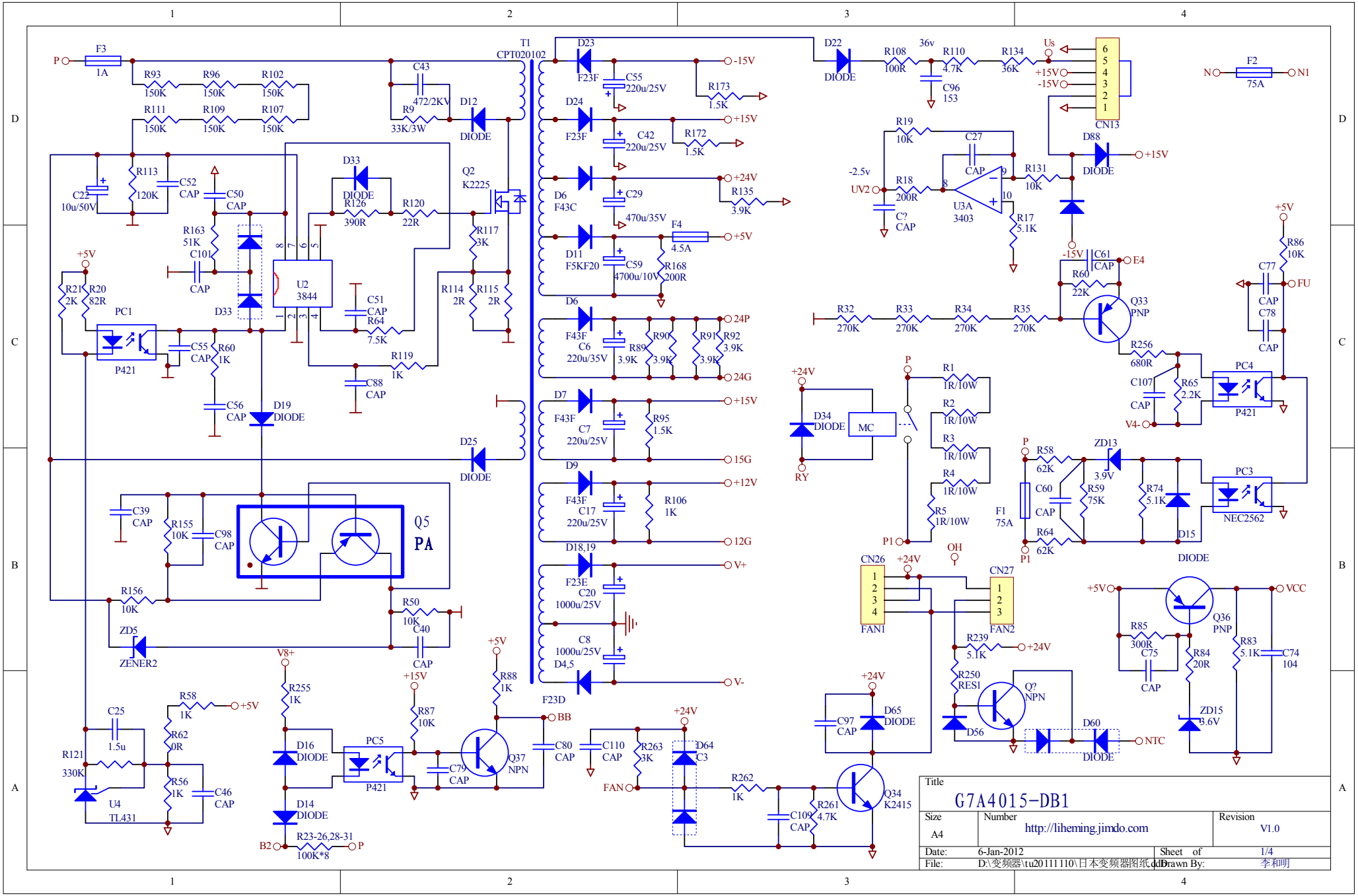
Title
G7A4015-DB1
Size
A4
Number
http://liheming.jimdo.com
Revision
V1.0
Date: 6-Jan-2012
Sheet of 1/4
File: D:\变频器\tu20111110\日本变频器图纸.ddb
Drawn By: 李和明
T1
CPT020102
U2
3844
Q5
PA
U3A
3403
CN13
CN26
FAN1
CN27
FAN2
Q33
PNP
Q36
PNP
Q37
NPN
Q34
K2415
Q?
NPN
U4
TL431
PC1
P421
PC4
PC3
NEC2562
PC5
MC
ZENER2
F3
1A
F2
75A
F4
4.5A
F1
75A
Q2
K2225
D19
DIODE
D14
DIODE
D16
DIODE
D15
DIODE
D88
DIODE
D60
DIODE
D65
DIODE
D64
C3
D56
ZD13
3.9V
ZD15
3.6V
ZD5
ZENER2
D34
DIODE
D33
DIODE
D12
DIODE
D22
DIODE
D25
DIODE
D23
F23F
D24
F23F
D6
F43C
D11
F5KF20
D6
F43F
C6
220u/35V
D7
F43F
C7
220u/25V
D9
F43F
C17
220u/25V
D18,19
F23E
C20
1000u/25V
C8
1000u/25V
D4,5
F23D
C55
220u/25V
C42
220u/25V
C29
470u/35V
C59
4700u/10V
R168
200R
R89
3.9K
R90
3.9K
R91
3.9K
R92
3.9K
R95
1.5K
R106
1K
R173
1.5K
R172
1.5K
R135
3.9K
R108
100R
R110
4.7K
R134
36K
R96
150K
R102
150K
R93
150K
R111
150K
R109
150K
R107
150K
R113
120K
C22
10u/50V
C52
CAP
C50
CAP
R163
51K
C101
CAP
R21
2K
R20
82R
R60
1K
C55
CAP
C56
CAP
R126
390R
R120
22R
R117
3K
R114
2R
R115
2R
C51
CAP
R64
7.5K
R119
1K
C88
CAP
C43
472/2KV
R9
33K/3W
C39
CAP
R155
10K
C98
CAP
R156
10K
R50
10K
C40
CAP
R255
1K
R88
1K
R87
10K
R58
1K
R62
0R
R56
1K
C46
CAP
C25
1.5u
R121
330K
R23-26,28-31
100K*8
C79
CAP
C80
CAP
C110
CAP
R263
3K
R262
1K
C109
CAP
R261
4.7K
C97
CAP
R239
5.1K
R250
RES1
R19
10K
R18
200R
C?
CAP
C27
CAP
R17
5.1K
R131
10K
C61
CAP
R60
22K
R32
270K
R33
270K
R34
270K
R35
270K
R256
680R
C107
CAP
R65
2.2K
R86
10K
C77
CAP
C78
CAP
R1
1R/10W
R2
1R/10W
R3
1R/10W
R4
1R/10W
R5
1R/10W
R58
62K
C60
CAP
R59
75K
R64
62K
R74
5.1K
R85
300R
C75
CAP
R84
20R
R83
5.1K
C74
104
-15V
+15V
+24V
+5V
24P
24G
15G
+12V
12G
V+
V-
BB
FAN
NTC
VCC
V8+
B2
P
N
N1
FU
E4
V4-
OH
RY
P1
Us
-2.5v
UV2
36v