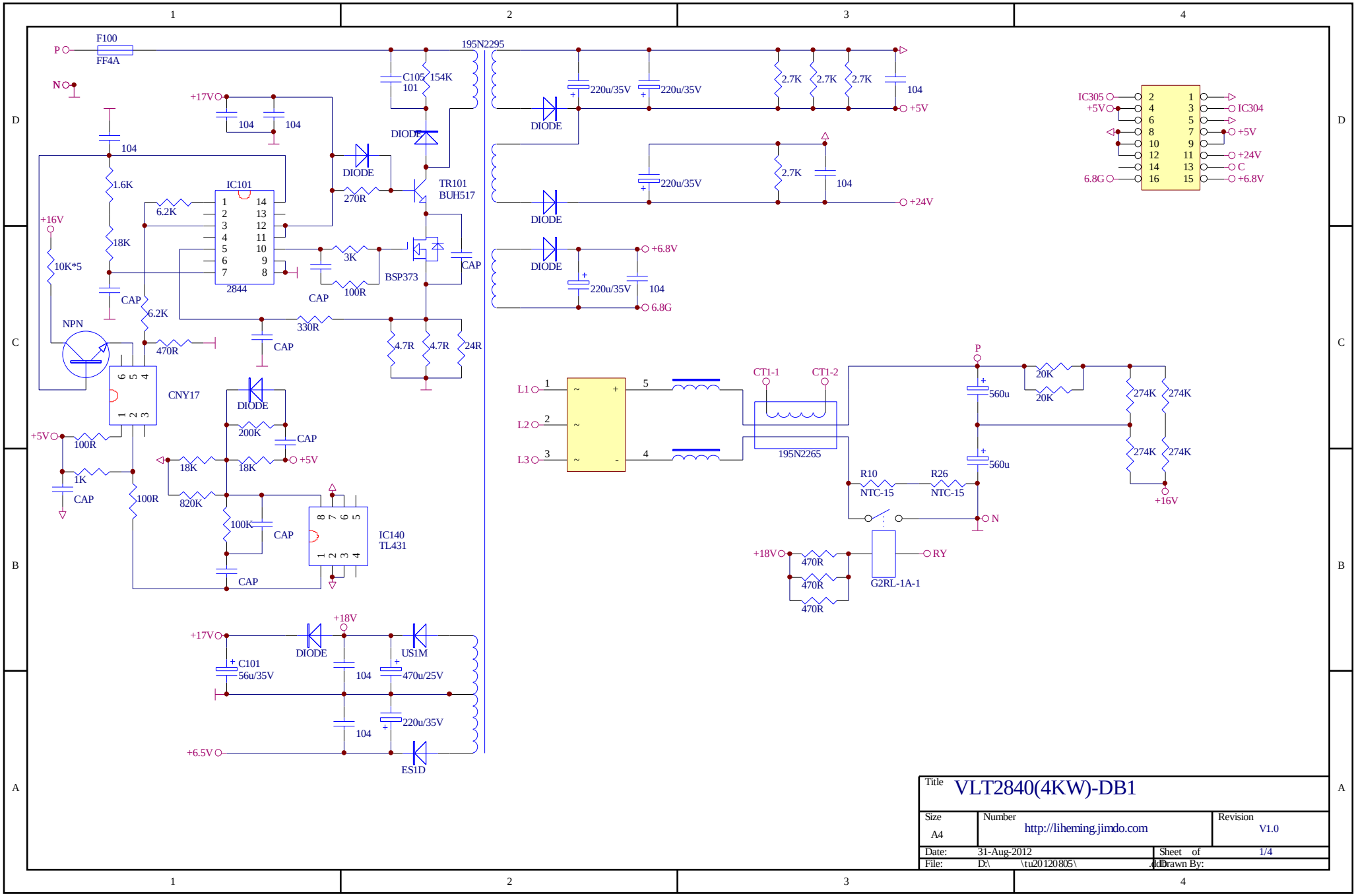

Title	VLT2840(4KW)-DB1	
Size A4	Number http://liheming.jimdo.com	Revision V1.0
Date: 31-Aug-2012	Sheet of 1/4	
File: D:\ \tu20120805\	Drawn By:	