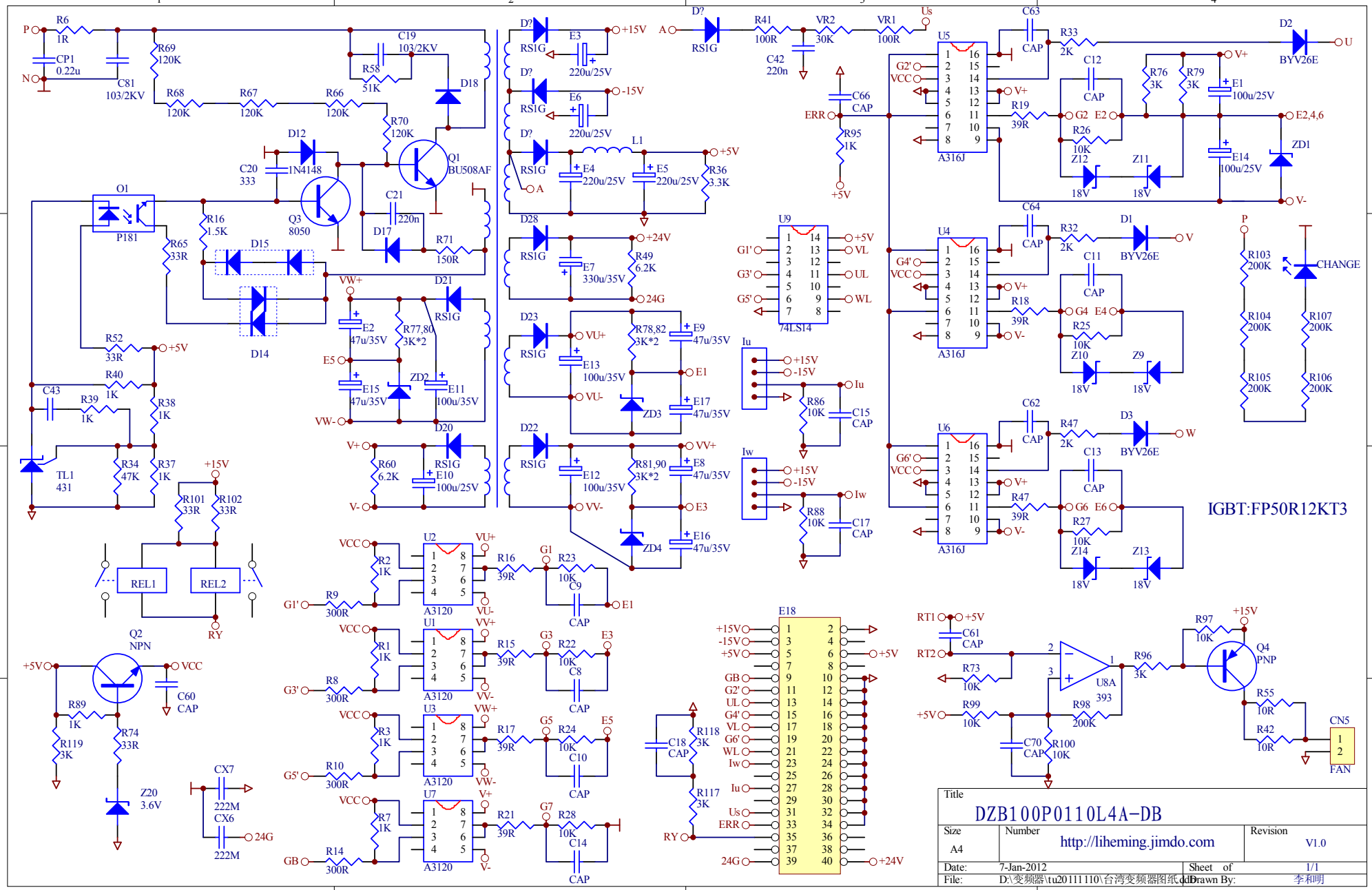
IGBT:FP50R12KT3
Title
DZB100P0110L4A-DB
Size
A4
Number
http://liheming.jimdo.com
Revision
V1.0
Date: 7-Jan-2012
Sheet of 1/1
File: D:\变频器\tu20111110\台湾变频器图纸.ddb
Drawn By: 李和明