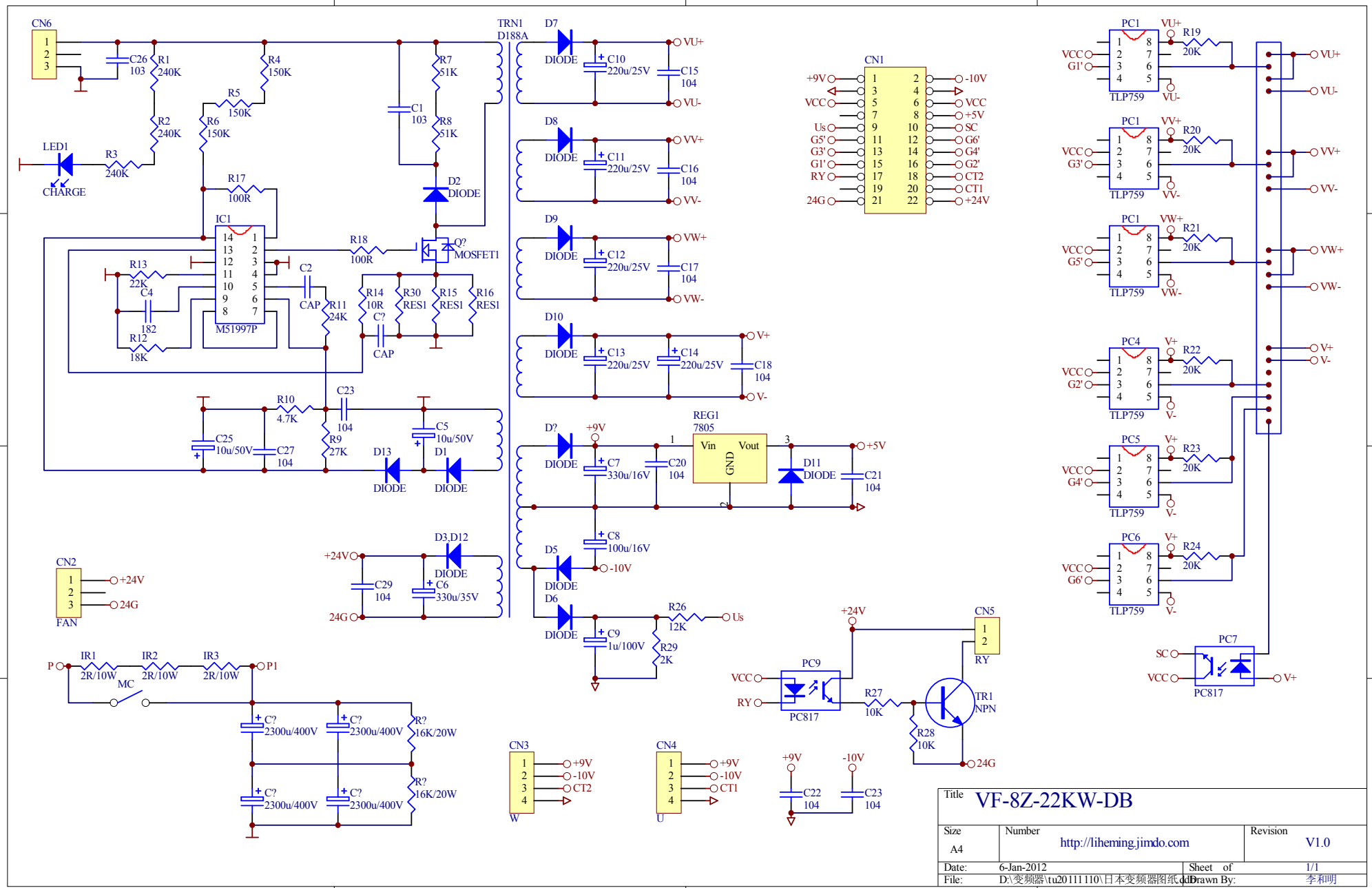
CN6
C26 103
R1 240K
R2 240K
R3 240K
R4 150K
R5 150K
R6 150K
R7 51K
R8 51K
C1 103
LED1
CHARGE
R17 100R
IC1
M51997P
R13 22K
C4 182
R12 18K
C2 CAP
R11 24K
R18 100R
Q? MOSFET1
R14 10R
C?
CAP
R30 RES1
R15 RES1
R16 RES1
D2 DIODE
TRN1 D188A
D7 DIODE
C10 220u/25V
C15 104
VU+
VU-
D8 DIODE
C11 220u/25V
C16 104
VV+
VV-
D9 DIODE
C12 220u/25V
C17 104
VW+
VW-
D10 DIODE
C13 220u/25V
C14 220u/25V
C18 104
V+
V-
R10 4.7K
C23 104
C25 10u/50V
C27 104
R9 27K
C5 10u/50V
D13 DIODE
D1 DIODE
D? DIODE
+9V
C7 330u/16V
C20 104
REG1 7805
Vin
Vout
GND
D11 DIODE
C21 104
+5V
C8 100u/16V
D5 DIODE
-10V
D6 DIODE
C9 1u/100V
R26 12K
R29 2K
Us
CN2
FAN
+24V
24G
D3,D12 DIODE
C29 104
C6 330u/35V
P
IR1 2R/10W
IR2 2R/10W
IR3 2R/10W
P1
MC
C? 2300u/400V
R? 16K/20W
CN3
W
+9V
-10V
CT2
CN4
U
CT1
C22 104
C23 104
CN1
+9V
VCC
Us
G5'
G3'
G1'
RY
24G
-10V
VCC
+5V
SC
G6'
G4'
G2'
CT2
CT1
+24V
PC1
TLP759
VU+
VU-
R19 20K
VV+
VV-
R20 20K
VW+
VW-
R21 20K
PC4
V+
V-
R22 20K
PC5
R23 20K
PC6
R24 20K
PC7
SC
PC817
PC9
R27 10K
R28 10K
TR1 NPN
CN5
RY
Title
VF-8Z-22KW-DB
Size
A4
Number
http://liheming.jimdo.com
Revision
V1.0
Date: 6-Jan-2012
Sheet of 1/1
File: D:\变频器\tu20111110\日本变频器图纸.ddb
Drawn By: 李和明