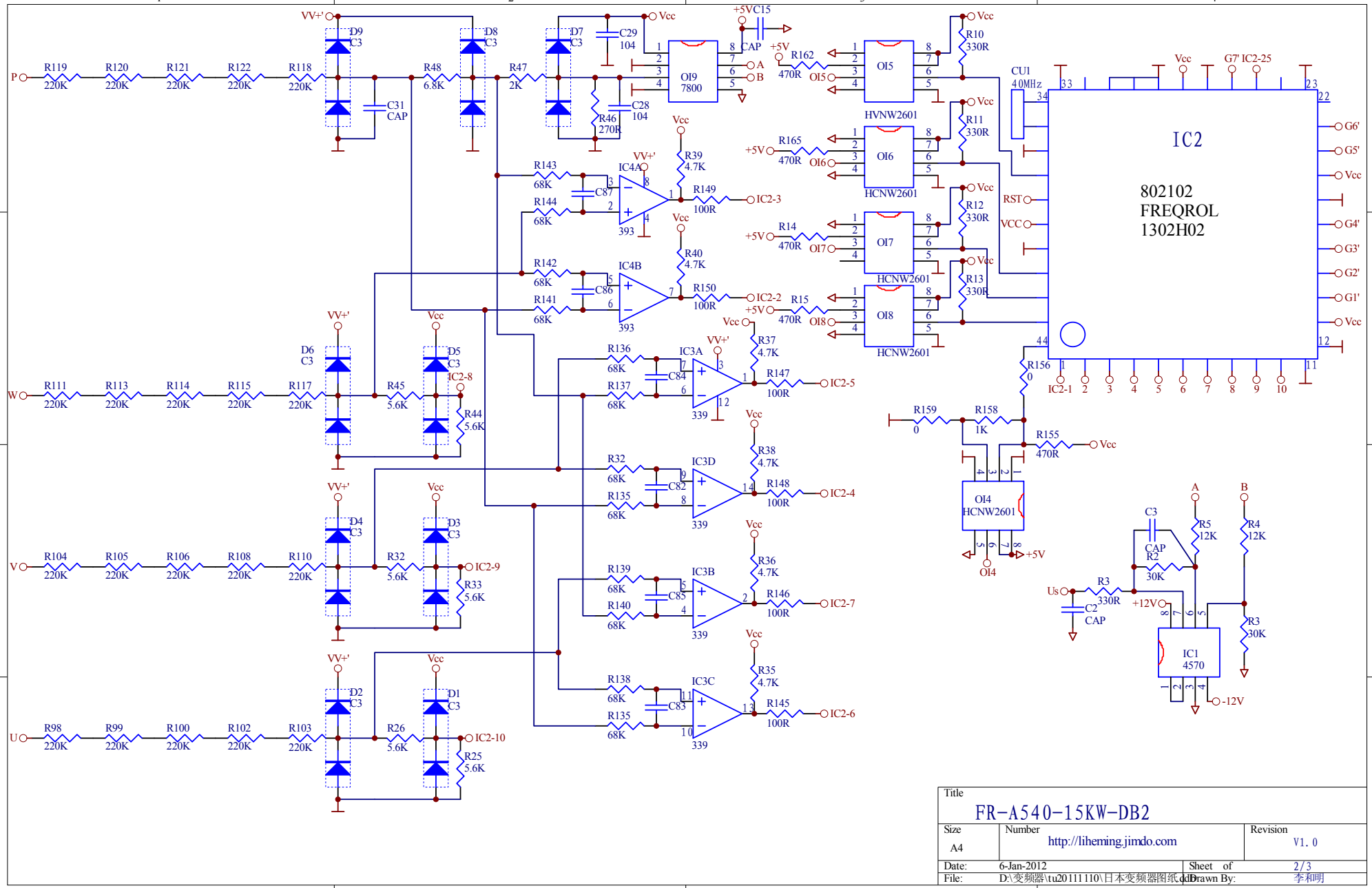


| Title | | |
|---|---|---|
| FR-A540-15KW-DB2 | | |
| Size A4 | Number http://liheming.jimdo.com | Revision V1.0 |
| Date: 6-Jan-2012 | Sheet of 2/3 | |
| File: D:\变频器\tu20111110\日本变频器图纸.ddb | Drawn By: 李和明 | |