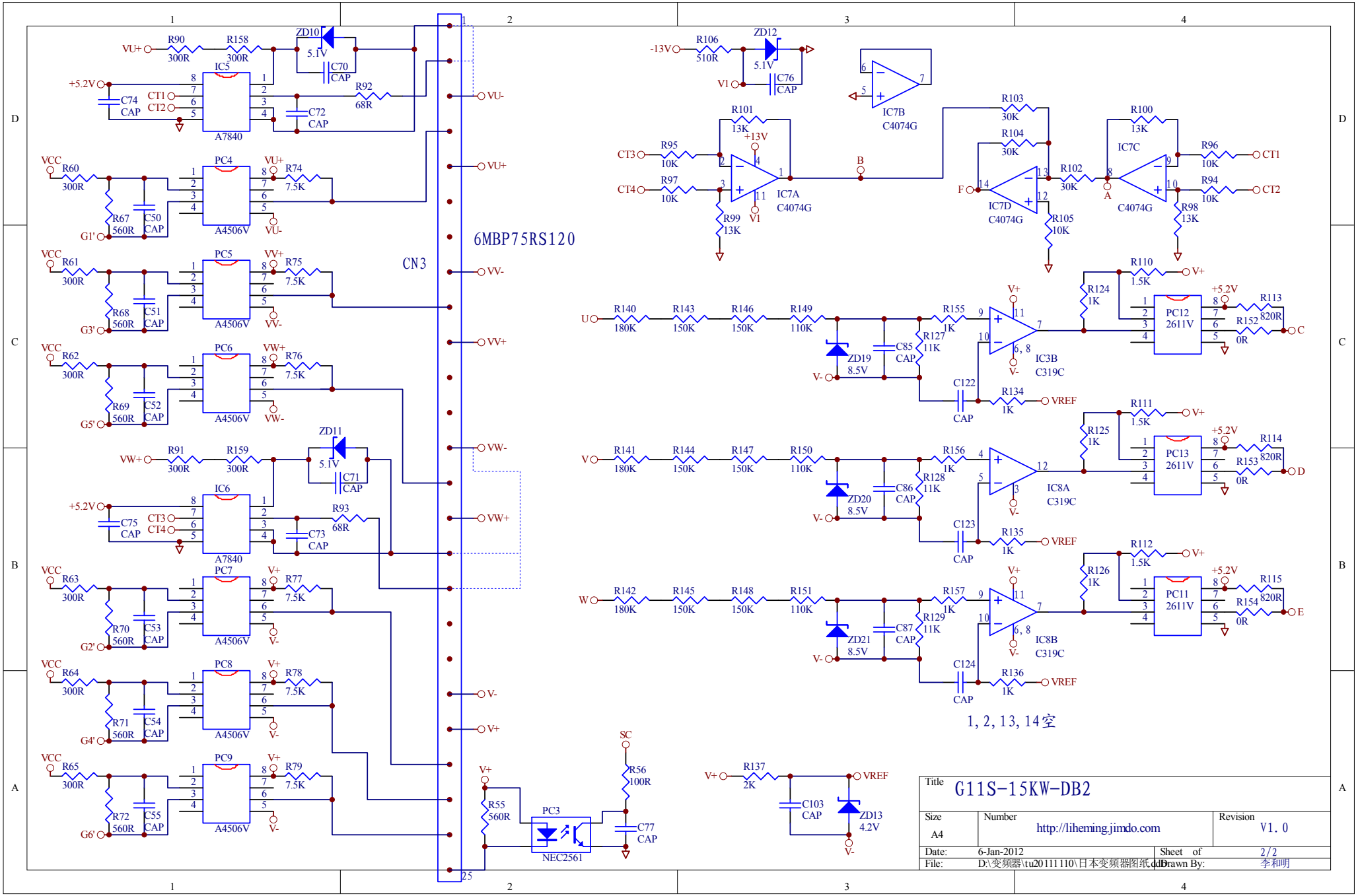

Title	G11S-15KW-DB2		
Size A4	Number http://liheming.jimdo.com		Revision V1.0
Date: 6-Jan-2012		Sheet of	2/2
File: D:\变频器\tu20111110\日本变频器图纸.ddb		Drawn By:	李和明