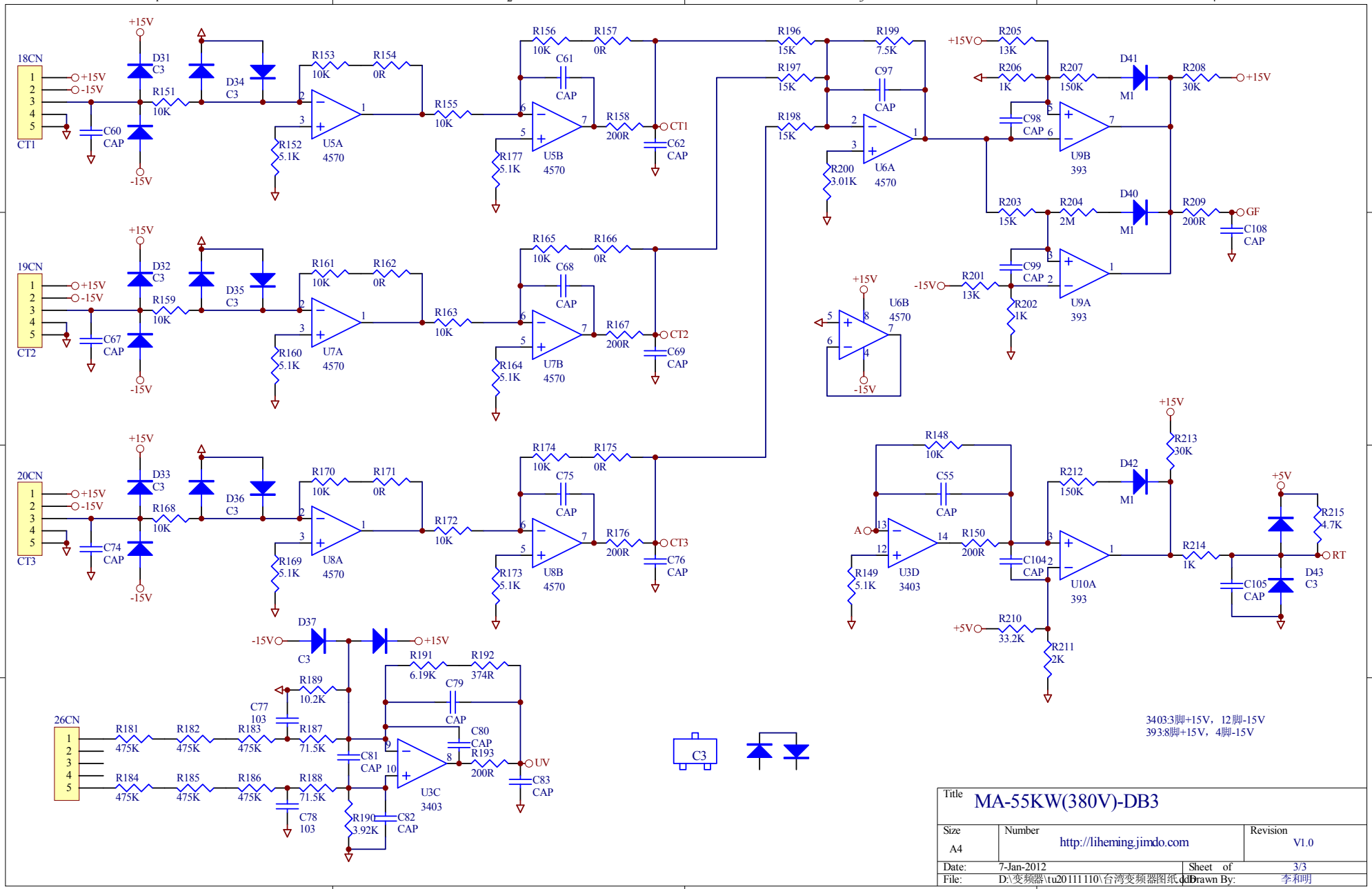

Title	MA-55KW(380V)-DB3	
Size A4	Number http://liheming.jimdo.com	Revision V1.0
Date: 7-Jan-2012	Sheet of 3/3	
File: D:\变频器\tu20111110\台湾变频器图纸.ddb	Drawn By: 李和明	