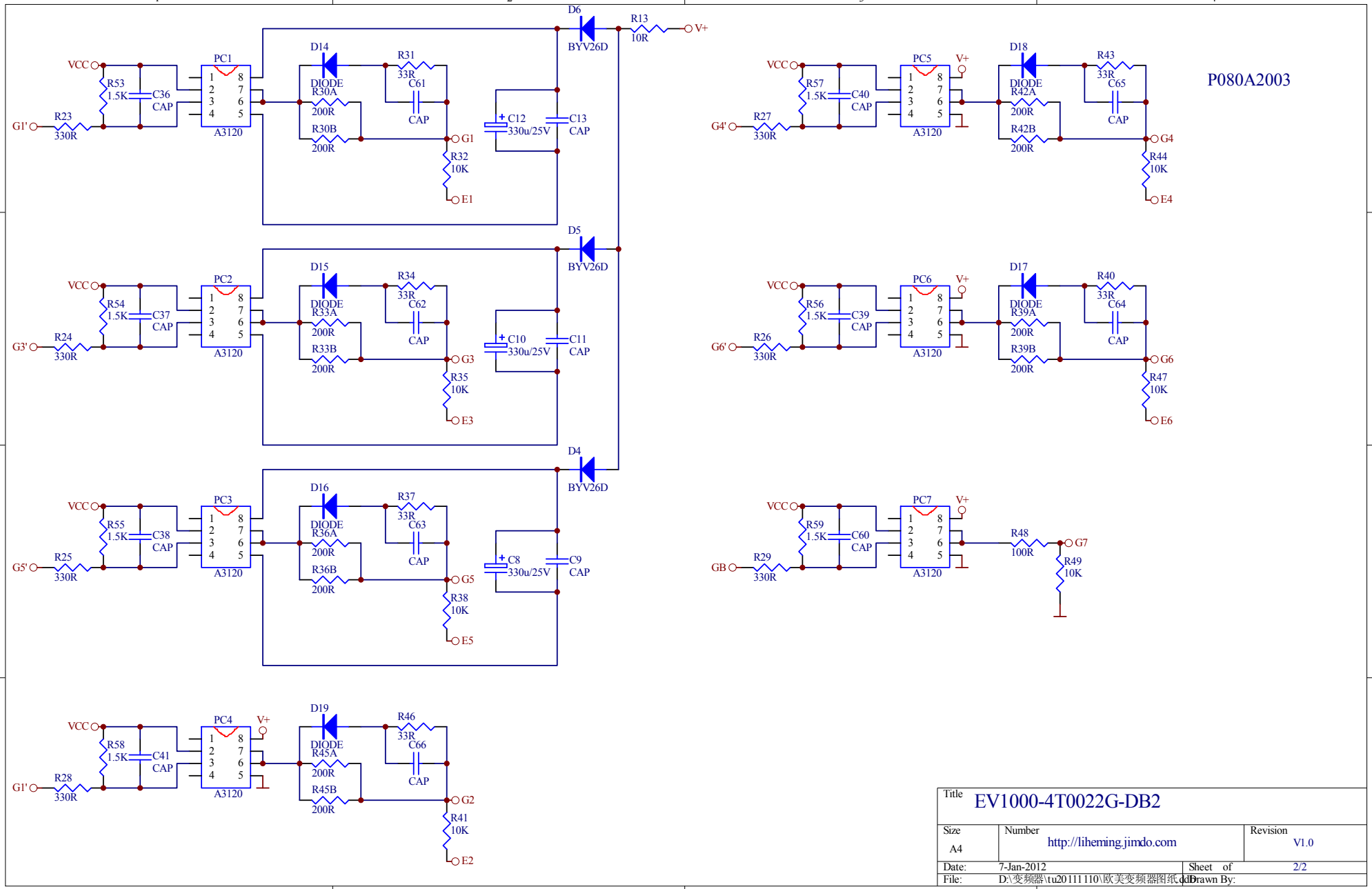
P080A2003
D6
BYV26D
R13
10R
V+
D5
BYV26D
D4
BYV26D
VCC
G1'
R23
330R
R53
1.5K
C36
CAP
PC1
A3120
D14
DIODE
R30A
200R
R30B
200R
R31
33R
C61
CAP
G1
R32
10K
E1
C12
330u/25V
C13
CAP
G3'
R24
330R
R54
1.5K
C37
CAP
PC2
D15
DIODE
R33A
R33B
R34
C62
G3
R35
E3
C10
C11
G5'
R25
R55
C38
PC3
D16
DIODE
R36A
R36B
R37
C63
G5
R38
E5
C8
C9
G1'
R28
R58
C41
PC4
D19
DIODE
R45A
R45B
R46
C66
G2
R41
E2
G4'
R27
R57
C40
PC5
D18
DIODE
R42A
R42B
R43
C65
G4
R44
E4
G6'
R26
R56
C39
PC6
D17
DIODE
R39A
R39B
R40
C64
G6
R47
E6
GB
R29
R59
C60
PC7
R48
100R
G7
R49
10K
Title
EV1000-4T0022G-DB2
Size
A4
Number
http://liheming.jimdo.com
Revision
V1.0
Date:
7-Jan-2012
Sheet of
2/2
File:
D:\变频器\tu20111110\欧美变频器图纸.ddb
Drawn By: