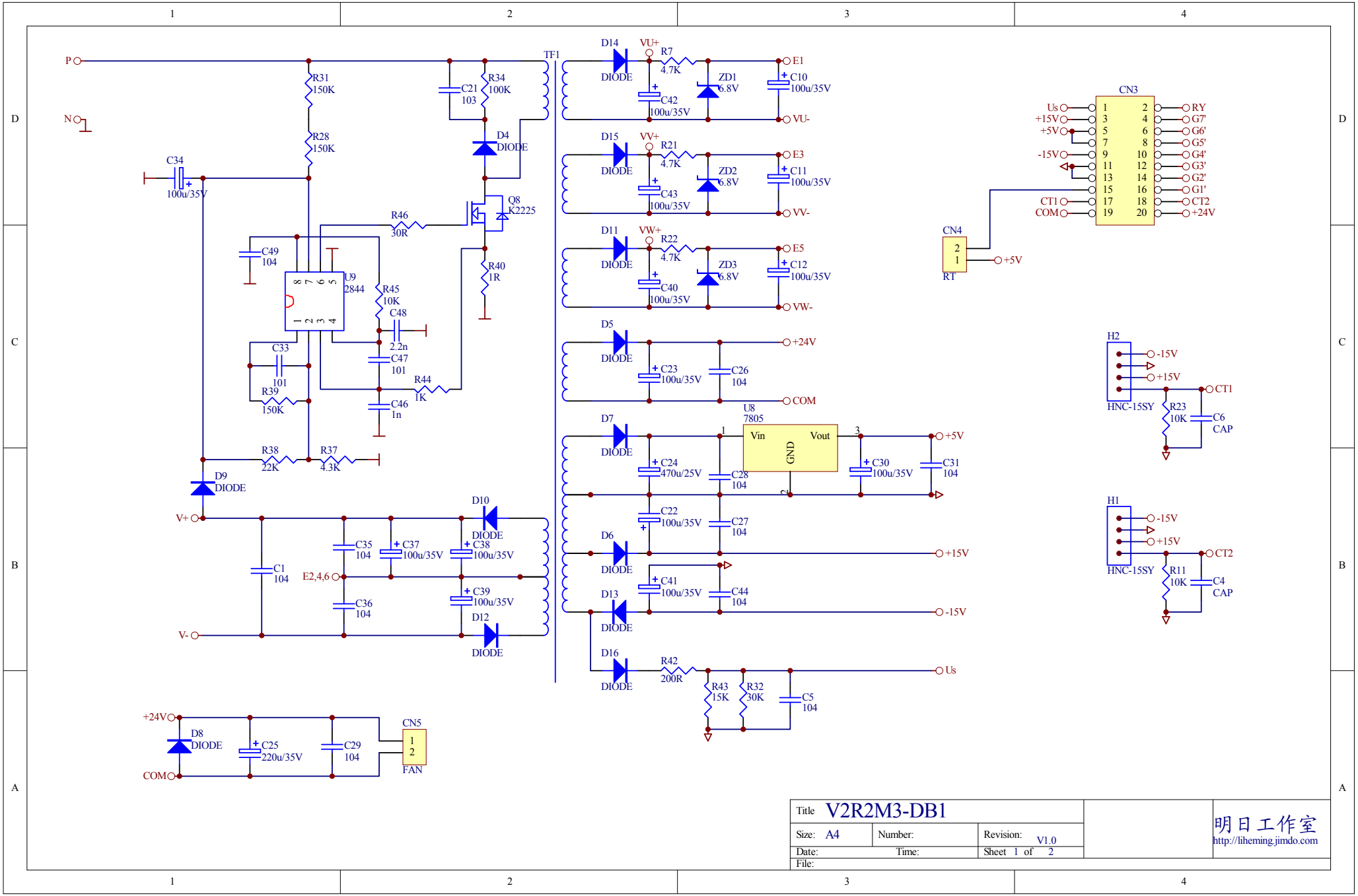
P
N
R31 150K
R28 150K
C34 100u/35V
C21 103
R34 100K
D4 DIODE
Q8 K2225
R46 30R
C49 104
U9 2844
R45 10K
C48 2.2n
C47 101
C33 101
R39 150K
R44 1K
C46 1n
R40 1R
R38 22K
R37 4.3K
D9 DIODE
V+
V-
C1 104
E2,4,6
C35 104
C37 100u/35V
C36 104
D10 DIODE
C38 100u/35V
C39 100u/35V
D12 DIODE
TF1
D14 DIODE
VU+
R7 4.7K
ZD1 6.8V
C42 100u/35V
C10 100u/35V
E1
VU-
D15 DIODE
VV+
R21 4.7K
ZD2 6.8V
C43 100u/35V
C11 100u/35V
E3
VV-
D11 DIODE
VW+
R22 4.7K
ZD3 6.8V
C40 100u/35V
C12 100u/35V
E5
VW-
D5 DIODE
C23 100u/35V
C26 104
+24V
COM
U8 7805
Vin
Vout
GND
D7 DIODE
C24 470u/25V
C28 104
C30 100u/35V
C31 104
+5V
C22 100u/35V
C27 104
D6 DIODE
+15V
C41 100u/35V
C44 104
D13 DIODE
-15V
D16 DIODE
R42 200R
R43 15K
R32 30K
C5 104
Us
CN3
Us
+15V
+5V
-15V
CT1
COM
RY
G7'
G6'
G5'
G4'
G3'
G2'
G1'
CT2
+24V
CN4
+5V
RT
H2
HNC-15SY
-15V
+15V
CT1
R23 10K
C6 CAP
H1
HNC-15SY
-15V
+15V
CT2
R11 10K
C4 CAP
+24V
D8 DIODE
C25 220u/35V
C29 104
COM
CN5
FAN
Title V2R2M3-DB1
Size: A4
Number:
Revision: V1.0
Date:
Time:
Sheet 1 of 2
File:
明日工作室
http://liheming.jimdo.com