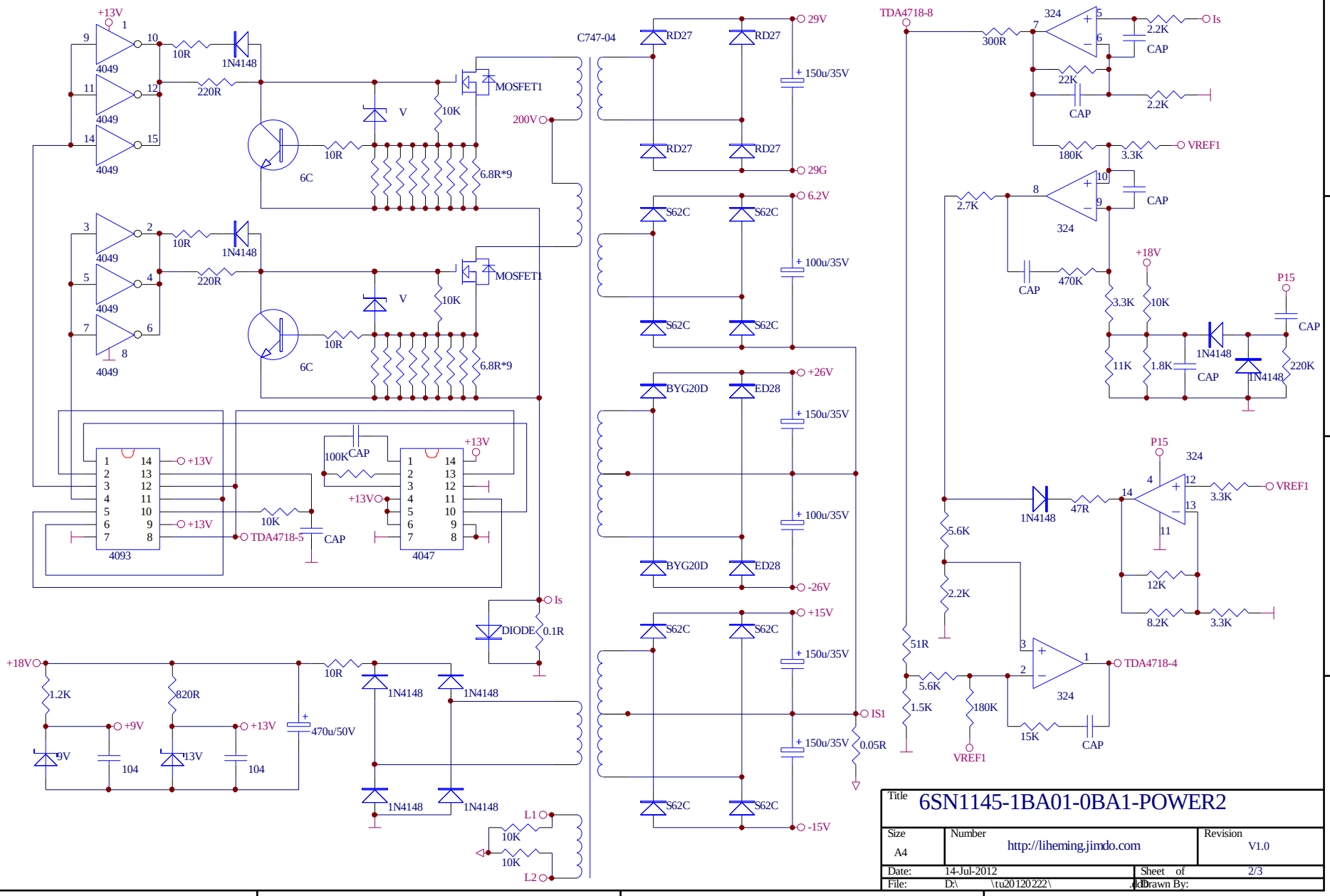

Title: 6SN1145-1BA01-0BA1-POWER2

Size	Number	Revision
A4	http://liheming.jimdo.com	V1.0

Date: 14-Jul-2012 Sheet of 2/3

File: D:\ \tu20120222\ Drawn By: