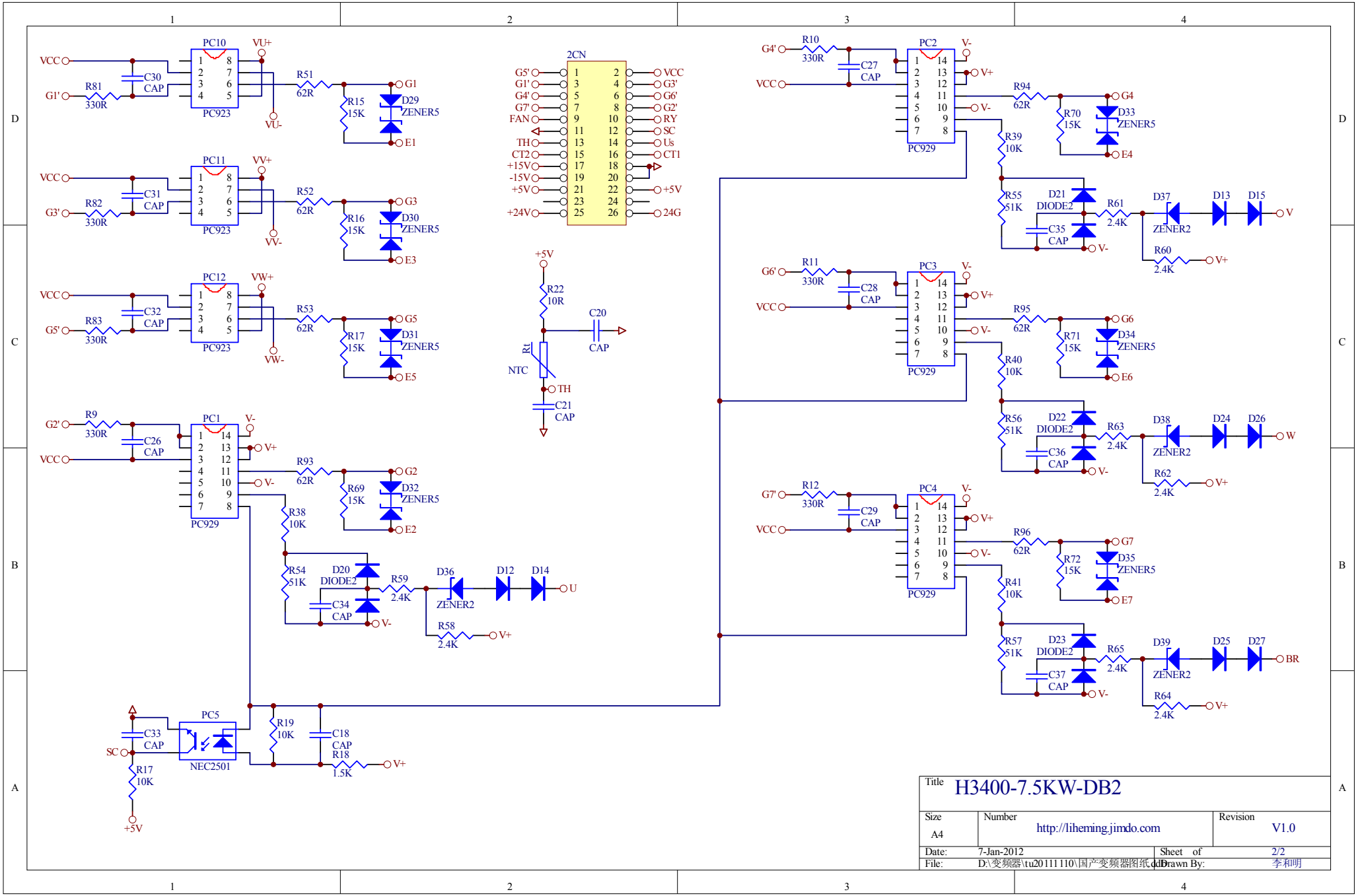
PC10
PC923
VU+
VU-
VCC
G1'
R81
330R
C30
CAP
R51
62R
R15
15K
D29
ZENER5
G1
E1
PC11
PC923
VV+
VV-
VCC
G3'
R82
330R
C31
CAP
R52
62R
R16
15K
D30
ZENER5
G3
E3
PC12
PC923
VW+
VW-
VCC
G5'
R83
330R
C32
CAP
R53
62R
R17
15K
D31
ZENER5
G5
E5
PC1
PC929
G2'
VCC
R9
330R
C26
CAP
V-
V+
R93
62R
R69
15K
D32
ZENER5
G2
E2
R38
10K
R54
51K
D20
DIODE2
C34
CAP
R59
2.4K
D36
ZENER2
D12
D14
U
R58
2.4K
V+
2CN
G5'
G1'
G4'
G7'
FAN
TH
CT2
+15V
-15V
+5V
+24V
VCC
G3'
G6'
G2'
RY
SC
Us
CT1
+5V
24G
+5V
R22
10R
C20
CAP
Rt
NTC
TH
C21
CAP
PC5
NEC2501
SC
C33
CAP
R17
10K
+5V
R19
10K
C18
CAP
R18
1.5K
V+
PC2
PC929
G4'
VCC
R10
330R
C27
CAP
V-
V+
R94
62R
R70
15K
D33
ZENER5
G4
E4
R39
10K
R55
51K
D21
DIODE2
C35
CAP
R61
2.4K
D37
ZENER2
D13
D15
V
R60
2.4K
V+
PC3
PC929
G6'
VCC
R11
330R
C28
CAP
R95
62R
R71
15K
D34
ZENER5
G6
E6
R40
10K
R56
51K
D22
DIODE2
C36
CAP
R63
2.4K
D38
ZENER2
D24
D26
W
R62
2.4K
PC4
PC929
G7'
VCC
R12
330R
C29
CAP
R96
62R
R72
15K
D35
ZENER5
G7
E7
R41
10K
R57
51K
D23
DIODE2
C37
CAP
R65
2.4K
D39
ZENER2
D25
D27
BR
R64
2.4K
Title
H3400-7.5KW-DB2
Size
A4
Number
http://liheming.jimdo.com
Revision
V1.0
Date:
7-Jan-2012
Sheet of
2/2
File:
D:\变频器\tu20111110\国产变频器图纸.ddb
Drawn By:
李和明