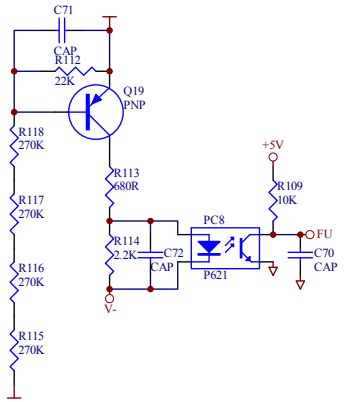

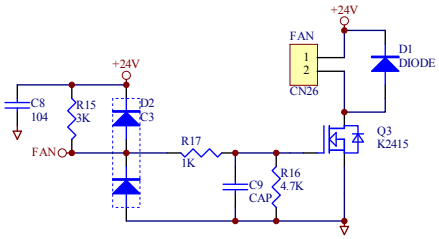

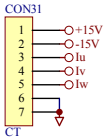

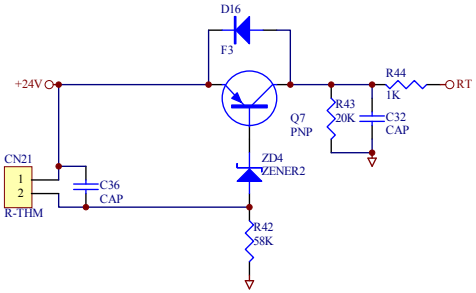

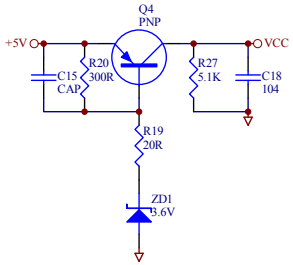

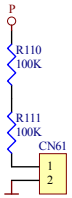

Title	F7U4037-DB3	
Size B	Number http://liheming.jimdo.com	Revision V1.0
Date: 6-Jan-2012	Sheet of	3/3
File: D:\变频器tu20111110\日本变频器图纸.ddb	Drawn By:	李和明