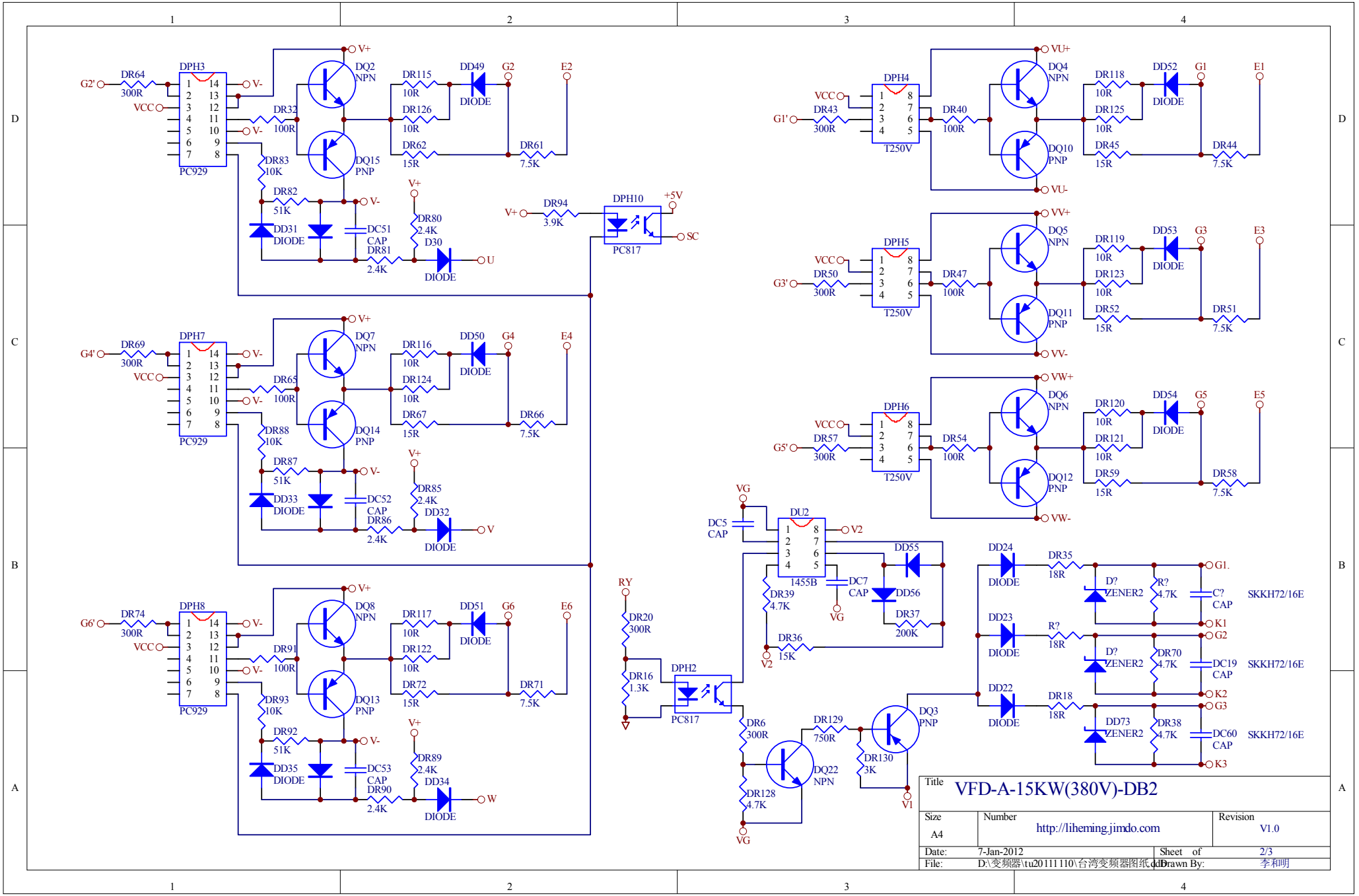
G2'
DR64
300R
VCC
DPH3
PC929
V+
V-
DQ2
NPN
DQ15
PNP
DR32
100R
DR83
10K
DR82
51K
DD31
DIODE
DC51
CAP
DR81
2.4K
DR80
2.4K
D30
DIODE
U
DR115
10R
DR126
10R
DR62
15R
DD49
DIODE
G2
E2
DR61
7.5K
DR94
3.9K
DPH10
+5V
PC817
SC
G4'
DR69
300R
DPH7
PC929
DQ7
NPN
DQ14
PNP
DR65
100R
DR88
10K
DR87
51K
DD33
DIODE
DC52
CAP
DR86
2.4K
DR85
2.4K
DD32
DIODE
V
DR116
10R
DR124
10R
DR67
15R
DD50
DIODE
G4
E4
DR66
7.5K
G6'
DR74
300R
DPH8
PC929
DQ8
NPN
DQ13
PNP
DR91
100R
DR93
10K
DR92
51K
DD35
DIODE
DC53
CAP
DR90
2.4K
DR89
2.4K
DD34
DIODE
W
DR117
10R
DR122
10R
DR72
15R
DD51
DIODE
G6
E6
DR71
7.5K
G1'
VCC
DR43
300R
DPH4
T250V
DR40
100R
DQ4
NPN
DQ10
PNP
VU+
VU-
DR118
10R
DR125
10R
DR45
15R
DD52
DIODE
G1
E1
DR44
7.5K
G3'
VCC
DR50
300R
DPH5
T250V
DR47
100R
DQ5
NPN
DQ11
PNP
VV+
VV-
DR119
10R
DR123
10R
DR52
15R
DD53
DIODE
G3
E3
DR51
7.5K
G5'
VCC
DR57
300R
DPH6
T250V
DR54
100R
DQ6
NPN
DQ12
PNP
VW+
VW-
DR120
10R
DR121
10R
DR59
15R
DD54
DIODE
G5
E5
DR58
7.5K
VG
DC5
CAP
DU2
1455B
V2
DR39
4.7K
DC7
CAP
DD55
DD56
DR37
200K
DR36
15K
RY
DR20
300R
DR16
1.3K
DPH2
PC817
DR6
300R
DR128
4.7K
DR129
750R
DQ22
NPN
DR130
3K
DQ3
PNP
V1
DD24
DIODE
DR35
18R
D?
ZENER2
R?
4.7K
C?
CAP
SKKH72/16E
G1.
K1
DD23
DIODE
R?
18R
G2
DR70
4.7K
DC19
CAP
K2
DD22
DIODE
DR18
18R
G3
DD73
ZENER2
DR38
4.7K
DC60
CAP
K3
Title
VFD-A-15KW(380V)-DB2
Size
A4
Number
http://liheming.jimdo.com
Revision
V1.0
Date:
7-Jan-2012
Sheet of
2/3
File:
D:\变频器\tu20111110\台湾变频器图纸.ddb
Drawn By:
李和明