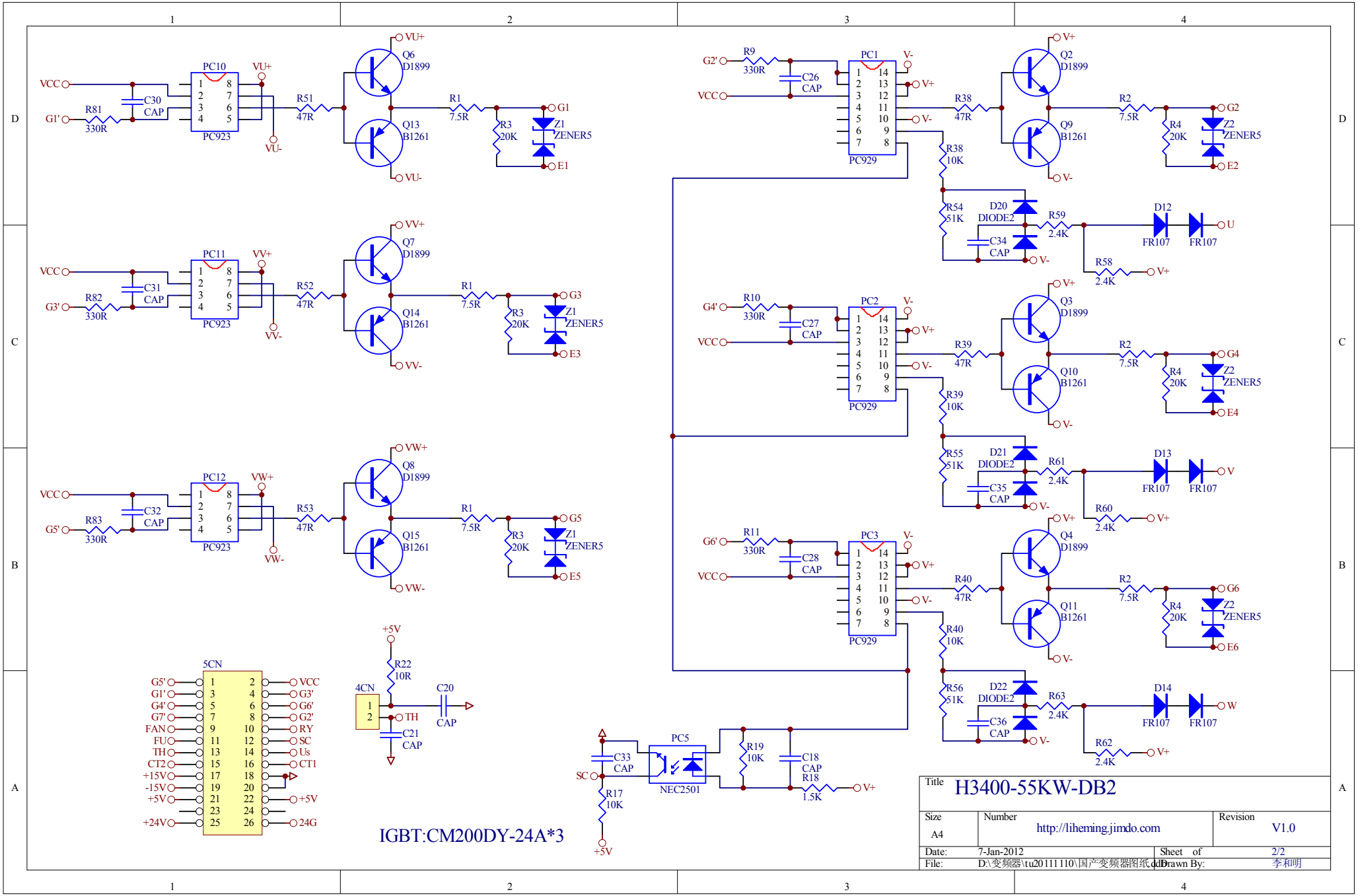
PC10
PC923
VCC
G1'
R81
330R
C30
CAP
VU+
VU-
R51
47R
Q6
D1899
Q13
B1261
R1
7.5R
R3
20K
Z1
ZENER5
G1
E1
PC11
PC923
VCC
G3'
R82
330R
C31
CAP
VV+
VV-
R52
47R
Q7
D1899
Q14
B1261
R1
7.5R
R3
20K
Z1
ZENER5
G3
E3
PC12
PC923
VCC
G5'
R83
330R
C32
CAP
VW+
VW-
R53
47R
Q8
D1899
Q15
B1261
R1
7.5R
R3
20K
Z1
ZENER5
G5
E5
5CN
G5'
G1'
G4'
G7'
FAN
FU
TH
CT2
+15V
-15V
+5V
+24V
VCC
G3'
G6'
G2'
RY
SC
Us
CT1
+5V
24G
+5V
R22
10R
4CN
TH
C20
CAP
C21
CAP
IGBT:CM200DY-24A*3
G2'
R9
330R
C26
CAP
VCC
PC1
PC929
V-
V+
R38
47R
Q2
D1899
Q9
B1261
R2
7.5R
R4
20K
Z2
ZENER5
G2
E2
R38
10K
R54
51K
D20
DIODE2
C34
CAP
R59
2.4K
D12
FR107
FR107
U
R58
2.4K
G4'
R10
330R
C27
CAP
VCC
PC2
PC929
R39
47R
Q3
D1899
Q10
B1261
R2
7.5R
R4
20K
Z2
ZENER5
G4
E4
R39
10K
R55
51K
D21
DIODE2
C35
CAP
R61
2.4K
D13
FR107
FR107
V
R60
2.4K
G6'
R11
330R
C28
CAP
VCC
PC3
PC929
R40
47R
Q4
D1899
Q11
B1261
R2
7.5R
R4
20K
Z2
ZENER5
G6
E6
R40
10K
R56
51K
D22
DIODE2
C36
CAP
R63
2.4K
D14
FR107
FR107
W
R62
2.4K
SC
C33
CAP
R17
10K
PC5
NEC2501
R19
10K
C18
CAP
R18
1.5K
Title
H3400-55KW-DB2
Size
A4
Number
http://liheming.jimdo.com
Revision
V1.0
Date:
7-Jan-2012
Sheet of
2/2
File:
D:\变频器\tu20111110\国产变频器图纸.ddb
Drawn By:
李和明