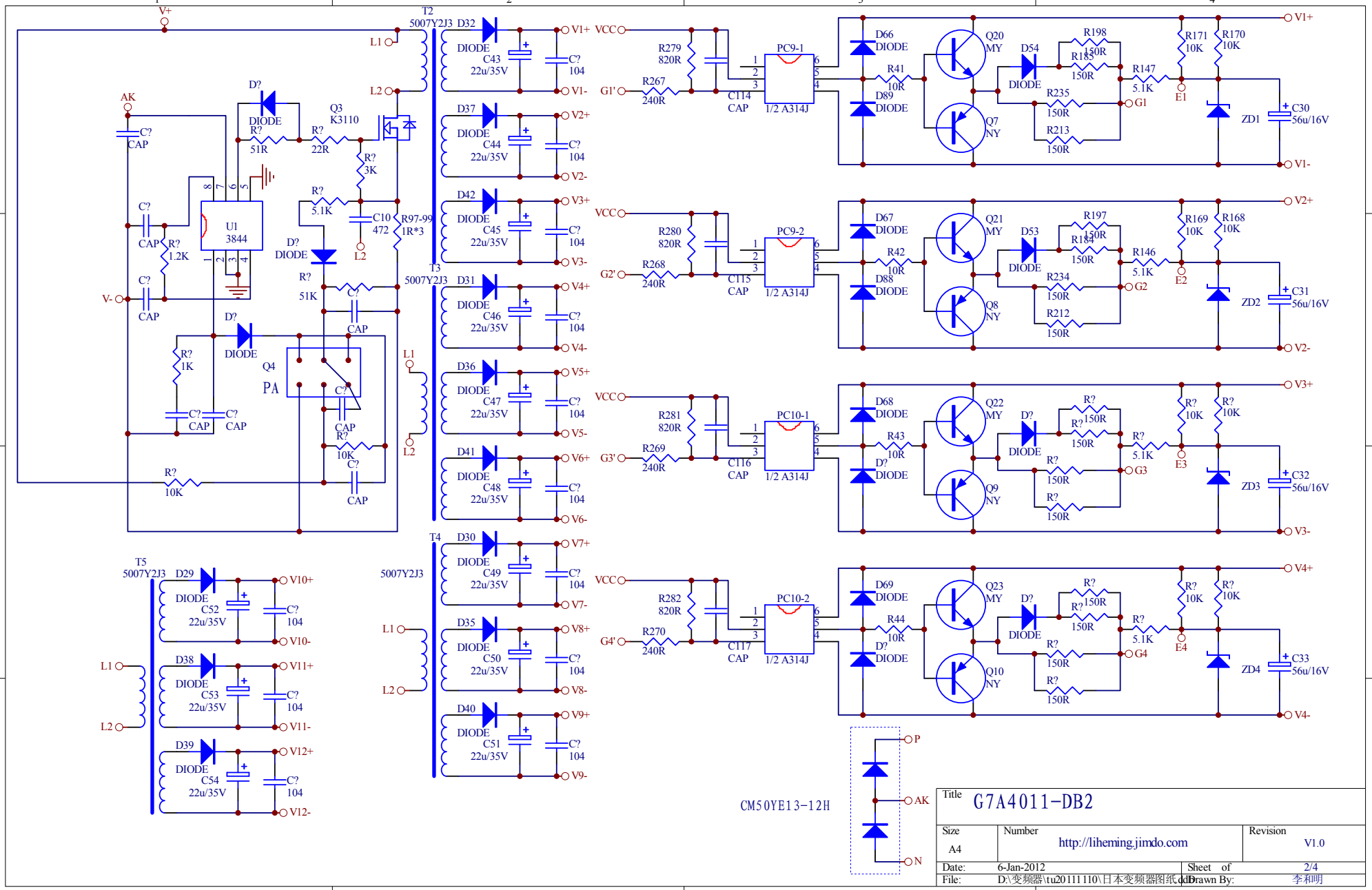
V+
AK
V-
U1
3844
Q3
K3110
Q4
PA
T2
5007Y2J3
T3
5007Y2J3
T4
5007Y2J3
T5
5007Y2J3
L1
L2
DIODE
CAP
C?
R?
D?
C10
472
R97-99
1R*3
V1+
V1-
V2+
V2-
V3+
V3-
V4+
V4-
V5+
V5-
V6+
V6-
V7+
V7-
V8+
V8-
V9+
V9-
V10+
V10-
V11+
V11-
V12+
V12-
VCC
G1'
G2'
G3'
G4'
PC9-1
PC9-2
PC10-1
PC10-2
1/2 A314J
Q20
MY
Q7
NY
Q21
MY
Q8
NY
Q22
MY
Q9
NY
Q23
MY
Q10
NY
G1
G2
G3
G4
E1
E2
E3
E4
ZD1
ZD2
ZD3
ZD4
C30
56u/16V
C31
56u/16V
C32
56u/16V
C33
56u/16V
CM50YE13-12H
P
AK
N
Title
G7A4011-DB2
Size
A4
Number
http://liheming.jimdo.com
Revision
V1.0
Date:
6-Jan-2012
Sheet of
2/4
File:
D:\变频器\tu20111110\日本变频器图纸.ddb
Drawn By:
李和明