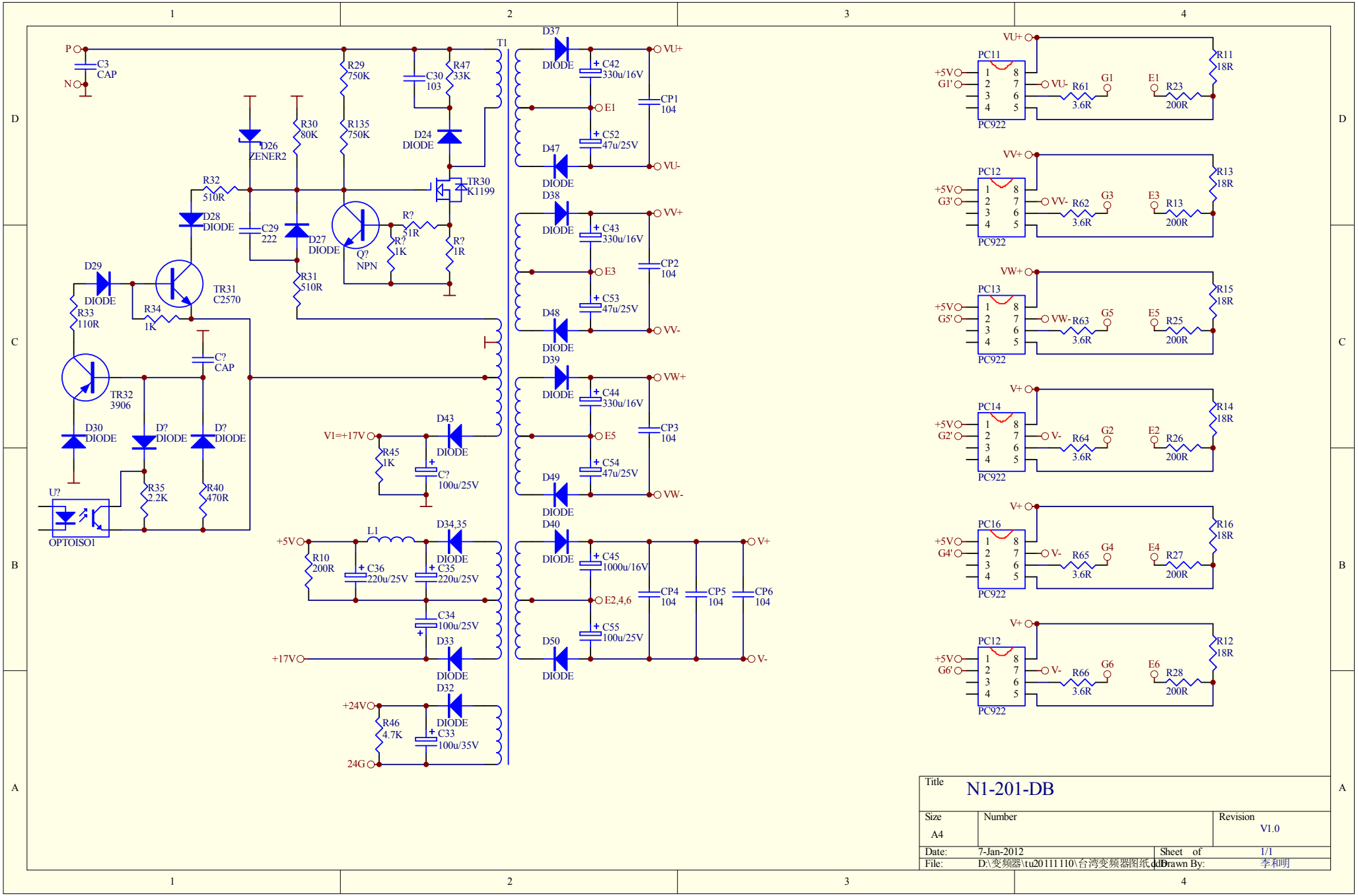
P
N
C3
CAP
R29
750K
R47
33K
C30
103
T1
D37
DIODE
C42
330u/16V
VU+
CP1
104
E1
C52
47u/25V
D47
DIODE
VU-
R30
80K
R135
750K
D26
ZENER2
D24
DIODE
TR30
K1199
R32
510R
D28
DIODE
C29
222
D27
DIODE
Q?
NPN
R?
51R
R?
1K
R?
1R
D38
DIODE
C43
330u/16V
VV+
CP2
104
E3
C53
47u/25V
D48
DIODE
VV-
R31
510R
D29
DIODE
R33
110R
R34
1K
TR31
C2570
C?
CAP
TR32
3906
D39
DIODE
C44
330u/16V
VW+
CP3
104
E5
C54
47u/25V
D49
DIODE
VW-
D30
DIODE
D?
DIODE
D?
DIODE
V1=+17V
D43
DIODE
R45
1K
C?
100u/25V
U?
OPTOISO1
R35
2.2K
R40
470R
+5V
L1
D34,35
DIODE
R10
200R
C36
220u/25V
C35
220u/25V
D40
DIODE
C45
1000u/16V
V+
E2,4,6
CP4
104
CP5
104
CP6
104
C34
100u/25V
D33
DIODE
C55
100u/25V
D50
DIODE
V-
+17V
D32
DIODE
+24V
R46
4.7K
C33
100u/35V
24G
PC11
PC922
+5V
G1'
VU-
R61
3.6R
G1
E1
R23
200R
R11
18R
PC12
PC922
VV+
G3'
VV-
R62
3.6R
G3
E3
R13
200R
R13
18R
PC13
PC922
VW+
G5'
VW-
R63
3.6R
G5
E5
R25
200R
R15
18R
PC14
PC922
V+
G2'
V-
R64
3.6R
G2
E2
R26
200R
R14
18R
PC16
PC922
V+
G4'
V-
R65
3.6R
G4
E4
R27
200R
R16
18R
PC12
PC922
V+
G6'
V-
R66
3.6R
G6
E6
R28
200R
R12
18R
Title
N1-201-DB
Size
A4
Number
Revision
V1.0
Date:
7-Jan-2012
Sheet of
1/1
File:
D:\变频器\tu20111110\台湾变频器图纸.ddb
Drawn By:
李和明