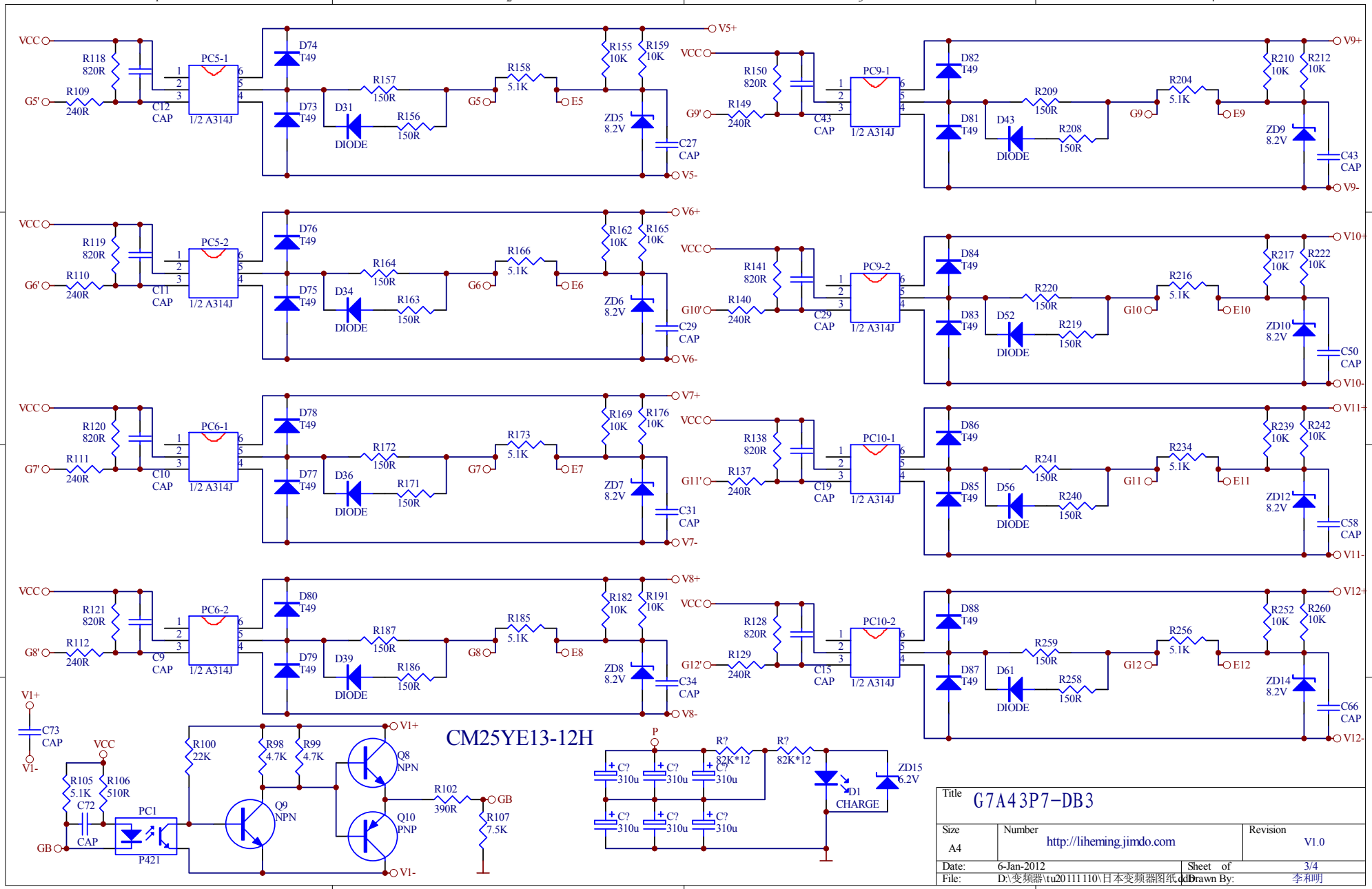
CM25YE13-12H
VCC
G5'
R118 820R
R109 240R
C12 CAP
PC5-1
1/2 A314J
D74 T49
D73 T49
D31
DIODE
R157 150R
R156 150R
G5
R158 5.1K
E5
R155 10K
R159 10K
ZD5 8.2V
C27 CAP
V5+
V5-
G9'
R150 820R
R149 240R
C43 CAP
PC9-1
D82 T49
D81 T49
D43
R209 150R
R208 150R
G9
R204 5.1K
E9
R210 10K
R212 10K
ZD9 8.2V
C43 CAP
V9+
V9-
G6'
R119 820R
R110 240R
C11 CAP
PC5-2
D76 T49
D75 T49
D34
R164 150R
R163 150R
G6
R166 5.1K
E6
R162 10K
R165 10K
ZD6 8.2V
C29 CAP
V6+
V6-
G10'
R141 820R
R140 240R
C29 CAP
PC9-2
D84 T49
D83 T49
D52
R220 150R
R219 150R
G10
R216 5.1K
E10
R217 10K
R222 10K
ZD10 8.2V
C50 CAP
V10+
V10-
G7'
R120 820R
R111 240R
C10 CAP
PC6-1
D78 T49
D77 T49
D36
R172 150R
R171 150R
G7
R173 5.1K
E7
R169 10K
R176 10K
ZD7 8.2V
C31 CAP
V7+
V7-
G11'
R138 820R
R137 240R
C19 CAP
PC10-1
D86 T49
D85 T49
D56
R241 150R
R240 150R
G11
R234 5.1K
E11
R239 10K
R242 10K
ZD12 8.2V
C58 CAP
V11+
V11-
G8'
R121 820R
R112 240R
C9 CAP
PC6-2
D80 T49
D79 T49
D39
R187 150R
R186 150R
G8
R185 5.1K
E8
R182 10K
R191 10K
ZD8 8.2V
C34 CAP
V8+
V8-
G12'
R128 820R
R129 240R
C15 CAP
PC10-2
D88 T49
D87 T49
D61
R259 150R
R258 150R
G12
R256 5.1K
E12
R252 10K
R260 10K
ZD14 8.2V
C66 CAP
V12+
V12-
V1+
C73 CAP
V1-
R105 5.1K
R106 510R
C72
PC1
P421
GB
R100 22K
R98 4.7K
R99 4.7K
Q9 NPN
Q8 NPN
Q10 PNP
R102 390R
R107 7.5K
P
C? 310u
R? 82K*12
ZD15 6.2V
D1 CHARGE
Title G7A43P7-DB3
Size A4
Number http://liheming.jimdo.com
Revision V1.0
Date: 6-Jan-2012
Sheet of 3/4
File: D:\变频器\tu20111110\日本变频器图纸.ddb
Drawn By: 李和明