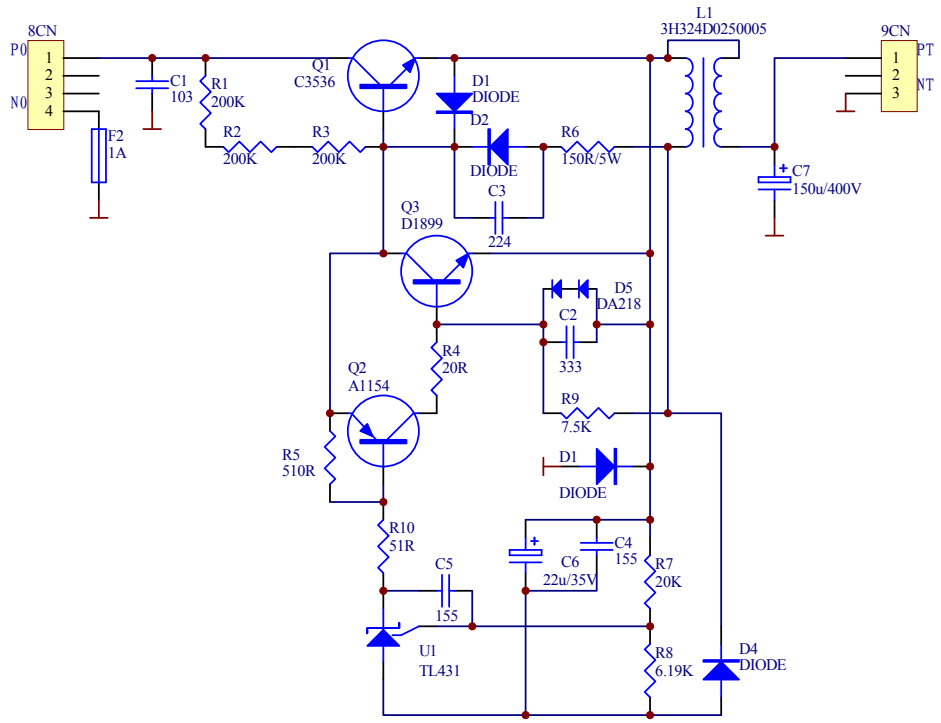

Title		
Size A4	Number http://liheming.jimdo.com	Revision V1.0
Date: 14-Jan-2012	Sheet of 1/1	
File: D:\变频器\tu20111110\台湾变频器图纸.ddb	Drawn By:	