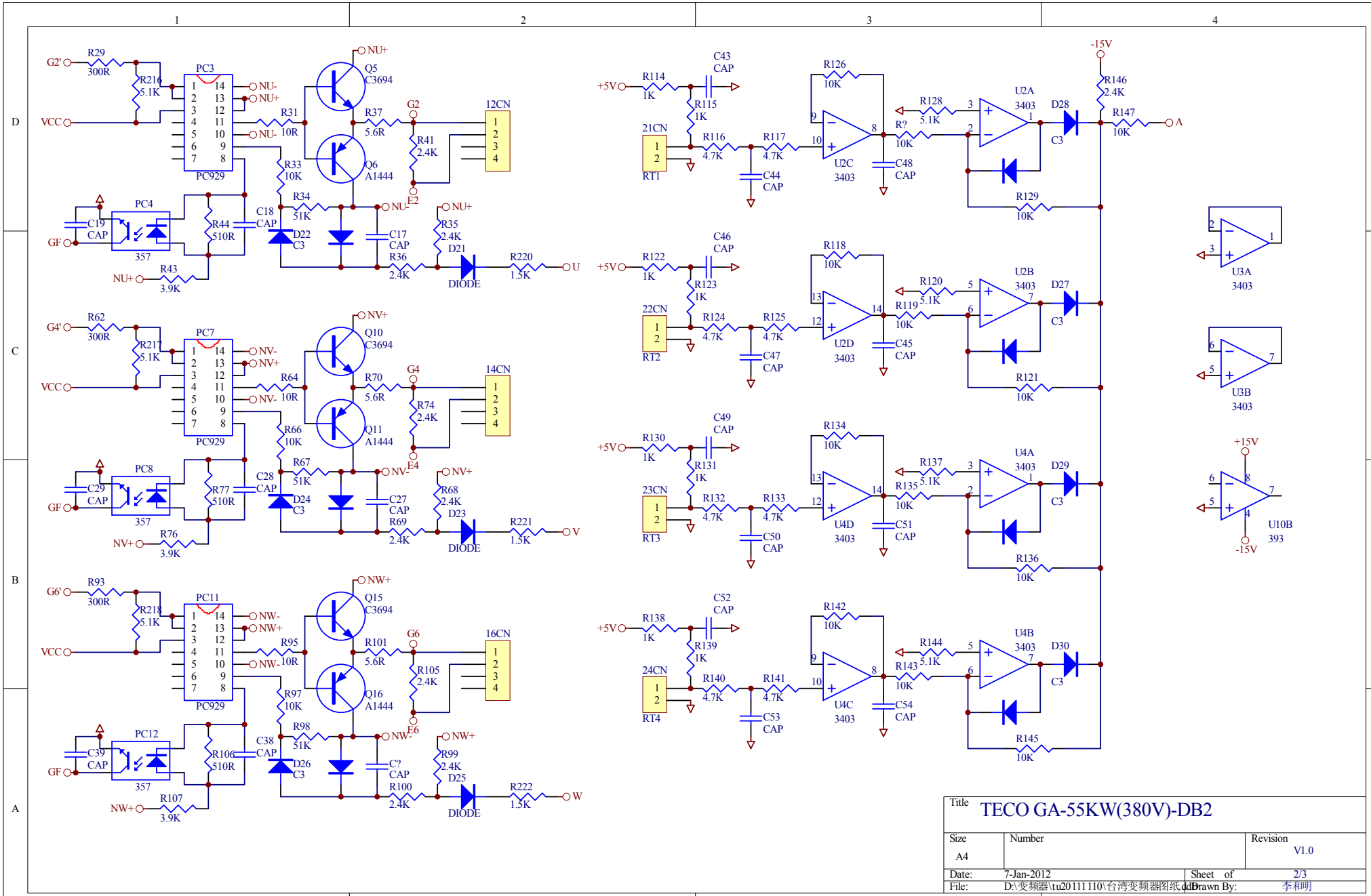


| | | | |
|---|---|---|---|
| Title | TECO GA-55KW(380V)-DB2 | | |
| Size A4 | Number | | Revision V1.0 |
| Date: | 7-Jan-2012 | Sheet of | 2/3 |
| File: | D:\变频器\tu20111110\台湾变频器图纸.ddb | Drawn By: | 李和明 |