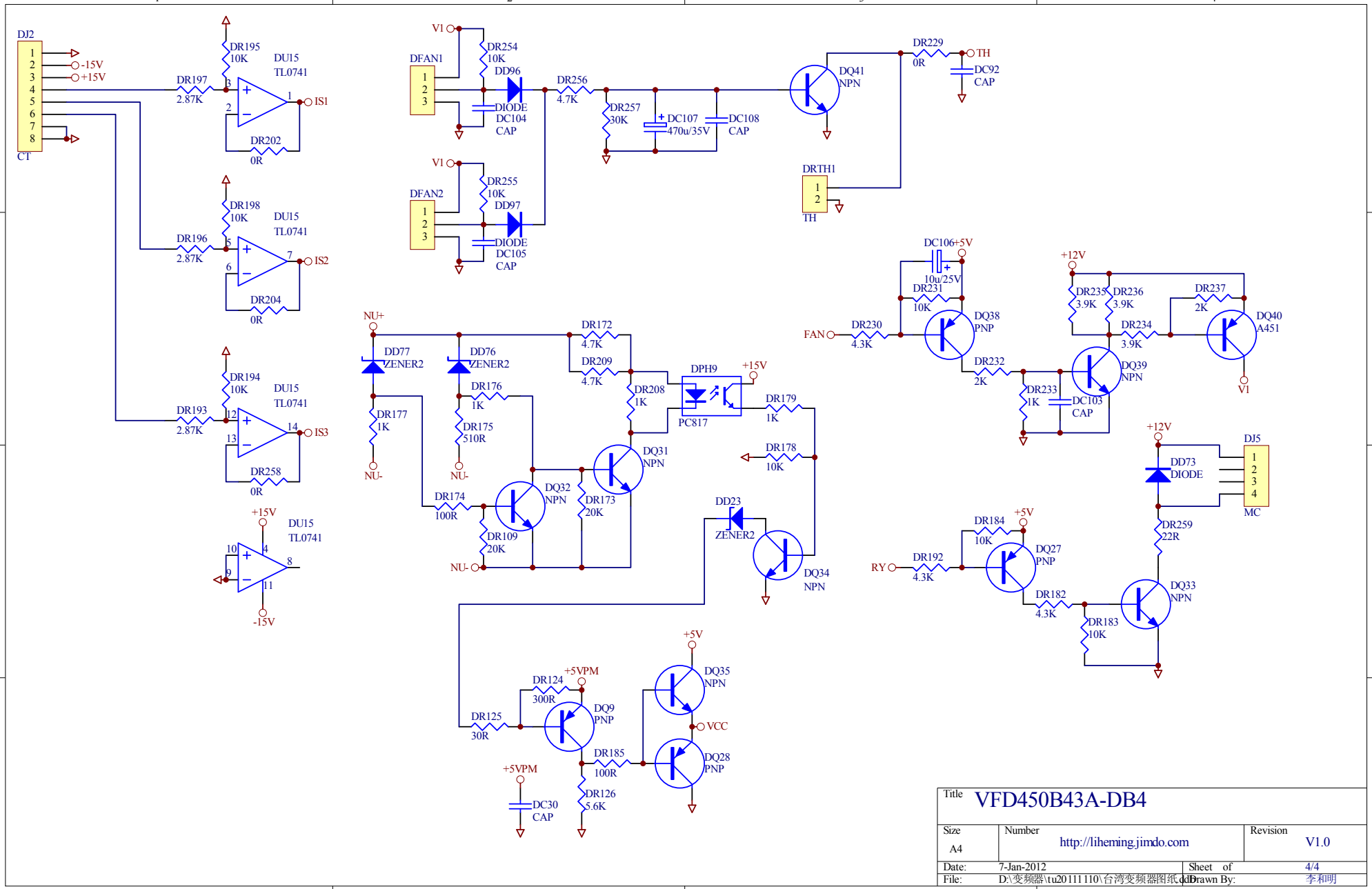
DJ2
CT
-15V
+15V
DR197
2.87K
DR195
10K
DU15
TL0741
IS1
DR202
0R
DR196
2.87K
DR198
10K
IS2
DR204
0R
DR193
2.87K
DR194
10K
IS3
DR258
0R
+15V
-15V
V1
DFAN1
DR254
10K
DD96
DIODE
DC104
CAP
DR256
4.7K
DR257
30K
DC107
470u/35V
DC108
CAP
DQ41
NPN
DR229
0R
TH
DC92
CAP
DRTH1
DFAN2
DR255
10K
DD97
DIODE
DC105
CAP
DC106
10u/25V
+5V
DR231
10K
DQ38
PNP
FAN
DR230
4.3K
DR232
2K
+12V
DR235
3.9K
DR236
3.9K
DR237
2K
DR234
3.9K
DQ40
A451
DQ39
NPN
DR233
1K
DC103
CAP
NU+
DD77
ZENER2
DD76
ZENER2
DR172
4.7K
DR209
4.7K
DR208
1K
DPH9
PC817
DR179
1K
DR178
10K
DR177
1K
DR176
1K
DR175
510R
NU-
DQ31
NPN
DQ32
NPN
DR173
20K
DR174
100R
DR109
20K
DD23
ZENER2
DQ34
NPN
DD73
DIODE
DJ5
MC
DR259
22R
DR184
10K
DQ27
PNP
RY
DR192
4.3K
DR182
4.3K
DR183
10K
DQ33
NPN
+5VPM
DR124
300R
DQ9
PNP
DR125
30R
DR185
100R
DR126
5.6K
DC30
CAP
DQ35
NPN
VCC
DQ28
PNP
Title
VFD450B43A-DB4
Size
A4
Number
http://liheming.jimdo.com
Revision
V1.0
Date:
7-Jan-2012
Sheet of
4/4
File:
D:\变频器\tu20111110\台湾变频器图纸.ddb
Drawn By:
李和明