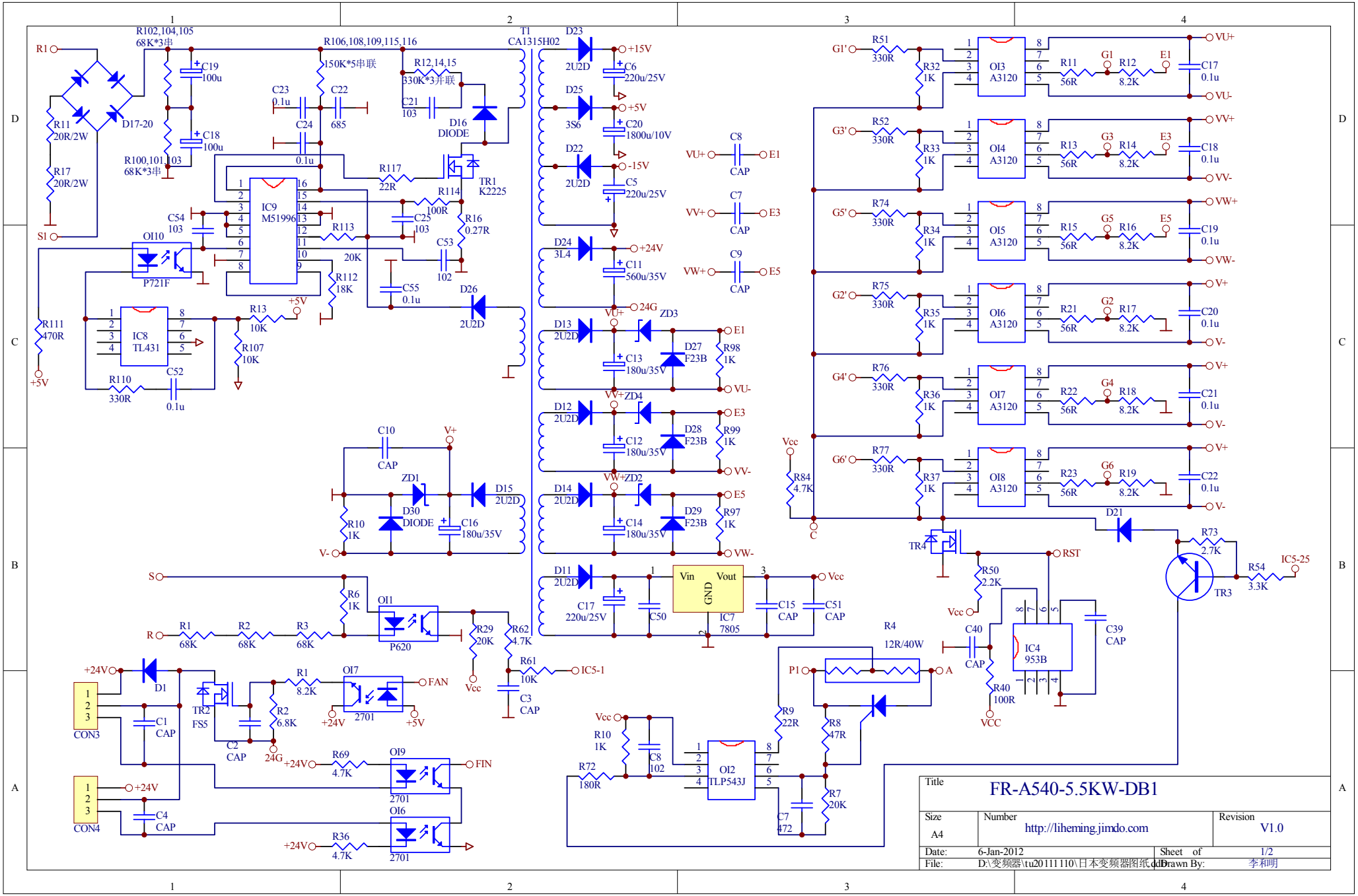
R1
S1
R11 20R/2W
R17 20R/2W
D17-20
R102,104,105 68K*3串
R100,101,103 68K*3串
C19 100u
C18 100u
R106,108,109,115,116
150K*5串联
R12,14,15 330K*3并联
C23 0.1u
C22 685
C24 0.1u
C21 103
D16 DIODE
R117 22R
R114 100R
TR1 K2225
R16 0.27R
C25 103
C53 102
IC9 M51996
C54 103
OI10 P721F
R113 20K
R112 18K
C55 0.1u
D26 2U2D
R111 470R
+5V
IC8 TL431
R13 10K
R107 10K
R110 330R
C52 0.1u
T1 CA1315H02
D23 2U2D
+15V
C6 220u/25V
D25 3S6
+5V
C20 1800u/10V
D22 2U2D
-15V
C5 220u/25V
D24 3L4
+24V
C11 560u/35V
24G
D13 2U2D
ZD3
D27 F23B
R98 1K
C13 180u/35V
VU+
VU-
D12 2U2D
ZD4
D28 F23B
R99 1K
C12 180u/35V
VV+
VV-
D14 2U2D
ZD2
D29 F23B
R97 1K
C14 180u/35V
VW+
VW-
D11 2U2D
C17 220u/25V
C50
IC7 7805
Vin
Vout
GND
C15 CAP
C51 CAP
Vcc
C8 CAP
E1
C7 CAP
E3
C9 CAP
E5
G1'
R51 330R
R32 1K
OI3 A3120
R11 56R
G1
R12 8.2K
E1
C17 0.1u
G3'
R52 330R
R33 1K
OI4 A3120
R13 56R
G3
R14 8.2K
E3
C18 0.1u
G5'
R74 330R
R34 1K
OI5 A3120
R15 56R
G5
R16 8.2K
E5
C19 0.1u
G2'
R75 330R
R35 1K
OI6 A3120
R21 56R
G2
R17 8.2K
C20 0.1u
G4'
R76 330R
R36 1K
OI7 A3120
R22 56R
G4
R18 8.2K
C21 0.1u
G6'
R77 330R
R37 1K
OI8 A3120
R23 56R
G6
R19 8.2K
C22 0.1u
V+
V-
R84 4.7K
C
D21
TR4
R73 2.7K
TR3
R54 3.3K
IC5-25
RST
R50 2.2K
C40 CAP
IC4 953B
C39 CAP
R40 100R
VCC
R4 12R/40W
P1
A
R9 22R
R8 47R
R7 20K
C7 472
OI2 TLP543J
R10 1K
C8 102
R72 180R
C10 CAP
ZD1
D30 DIODE
D15 2U2D
R10 1K
C16 180u/35V
S
R6 1K
OI1 P620
R
R1 68K
R2 68K
R3 68K
R29 20K
R62 4.7K
R61 10K
IC5-1
C3 CAP
+24V
D1
CON3
C1 CAP
TR2 FS5
C2 CAP
R1 8.2K
R2 6.8K
OI7 2701
FAN
24G
R69 4.7K
OI9 2701
FIN
CON4
C4 CAP
R36 4.7K
OI6 2701
Title
FR-A540-5.5KW-DB1
Size
A4
Number
http://liheming.jimdo.com
Revision
V1.0
Date: 6-Jan-2012
Sheet of 1/2
File: D:\变频器\tu20111110\日本变频器图纸.ddb
Drawn By: 李和明