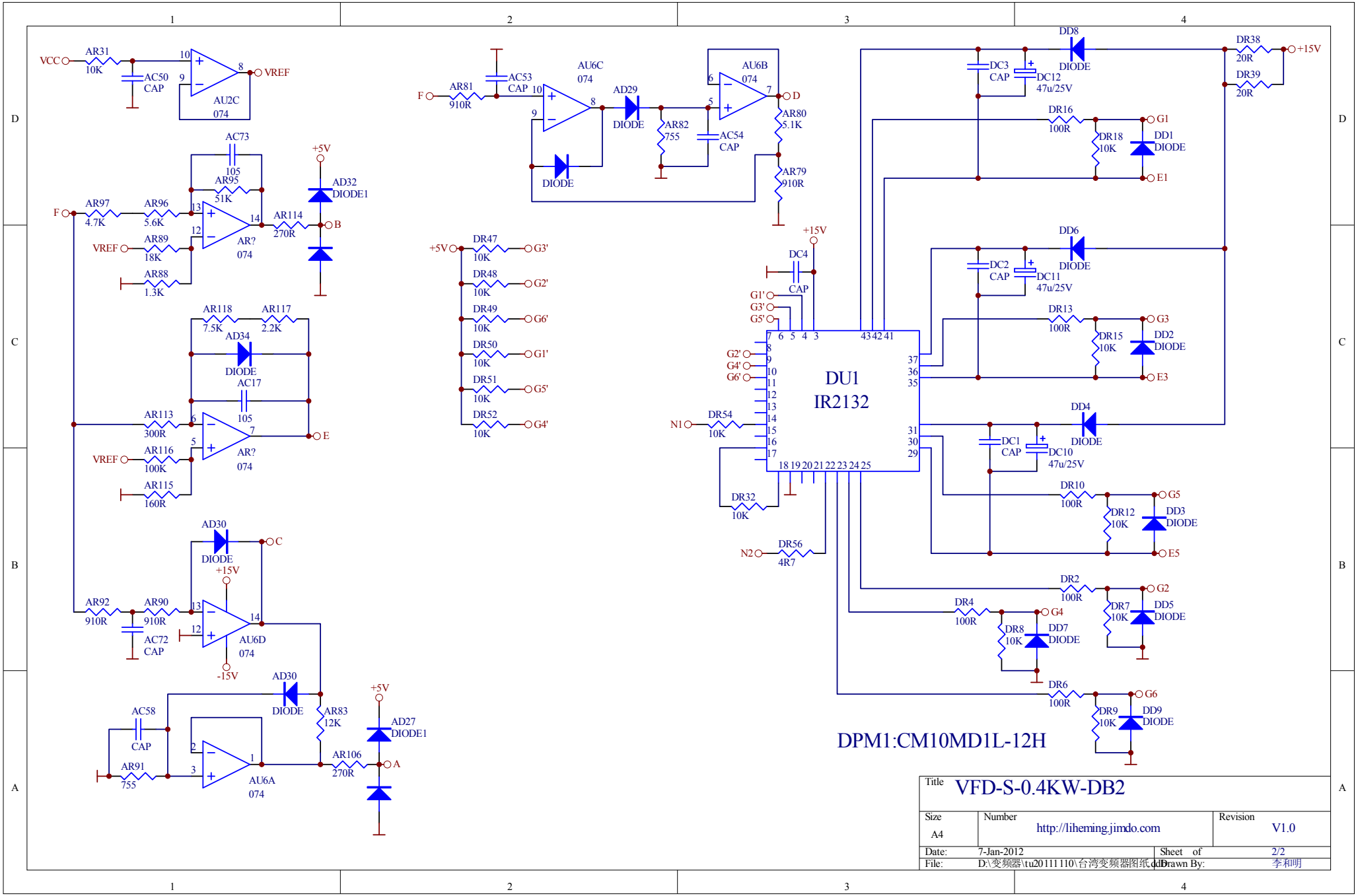
VCC
AR31
10K
AC50
CAP
AU2C
074
VREF
AC73
105
AR95
51K
+5V
AD32
DIODE1
F
AR97
4.7K
AR96
5.6K
AR89
18K
AR88
1.3K
AR114
270R
B
AR?
074
AR118
7.5K
AR117
2.2K
AD34
DIODE
AC17
105
AR113
300R
AR116
100K
AR115
160R
E
AD30
DIODE
C
+15V
AR92
910R
AR90
910R
AC72
CAP
AU6D
074
-15V
AC58
CAP
AR91
755
AU6A
074
AR83
12K
AD27
DIODE1
AR106
270R
A
AC53
CAP
AR81
910R
AU6C
074
AD29
DIODE
AR82
755
AC54
CAP
AU6B
074
D
AR80
5.1K
AR79
910R
DR47
10K
G3'
DR48
10K
G2'
DR49
10K
G6'
DR50
10K
G1'
DR51
10K
G5'
DR52
10K
G4'
DC4
CAP
G1'
G3'
G5'
G2'
G4'
G6'
N1
DR54
10K
DR32
10K
N2
DR56
4R7
DU1
IR2132
DD8
DIODE
DC3
CAP
DC12
47u/25V
DR38
20R
DR39
20R
DR16
100R
DR18
10K
DD1
DIODE
G1
E1
DD6
DIODE
DC2
CAP
DC11
47u/25V
DR13
100R
DR15
10K
DD2
DIODE
G3
E3
DD4
DIODE
DC1
CAP
DC10
47u/25V
DR10
100R
DR12
10K
DD3
DIODE
G5
E5
DR2
100R
DR7
10K
DD5
DIODE
G2
DR4
100R
DR8
10K
DD7
DIODE
G4
DR6
100R
DR9
10K
DD9
DIODE
G6
DPM1:CM10MD1L-12H
Title
VFD-S-0.4KW-DB2
Size
A4
Number
http://liheming.jimdo.com
Revision
V1.0
Date:
7-Jan-2012
Sheet of
2/2
File:
D:\变频器\tu20111110\台湾变频器图纸.ddb
Drawn By:
李和明