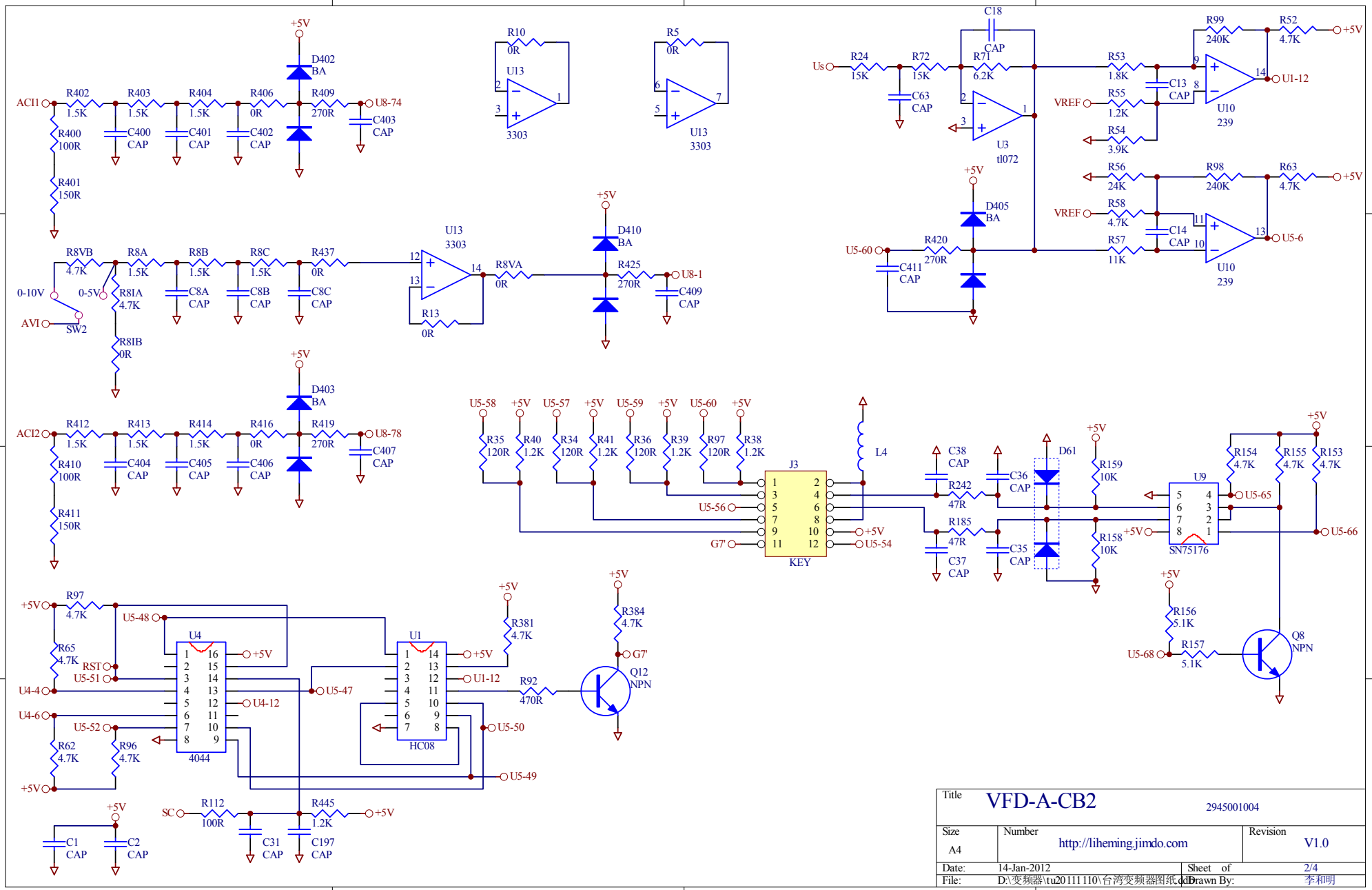

Title	VFD-A-CB2	2945001004	
Size A4	Number http://liheming.jimdo.com		Revision V1.0
Date: 14-Jan-2012		Sheet of	2/4
File: D:\变频器\tu20111110\台湾变频器图纸.ddb		Drawn By:	李和明