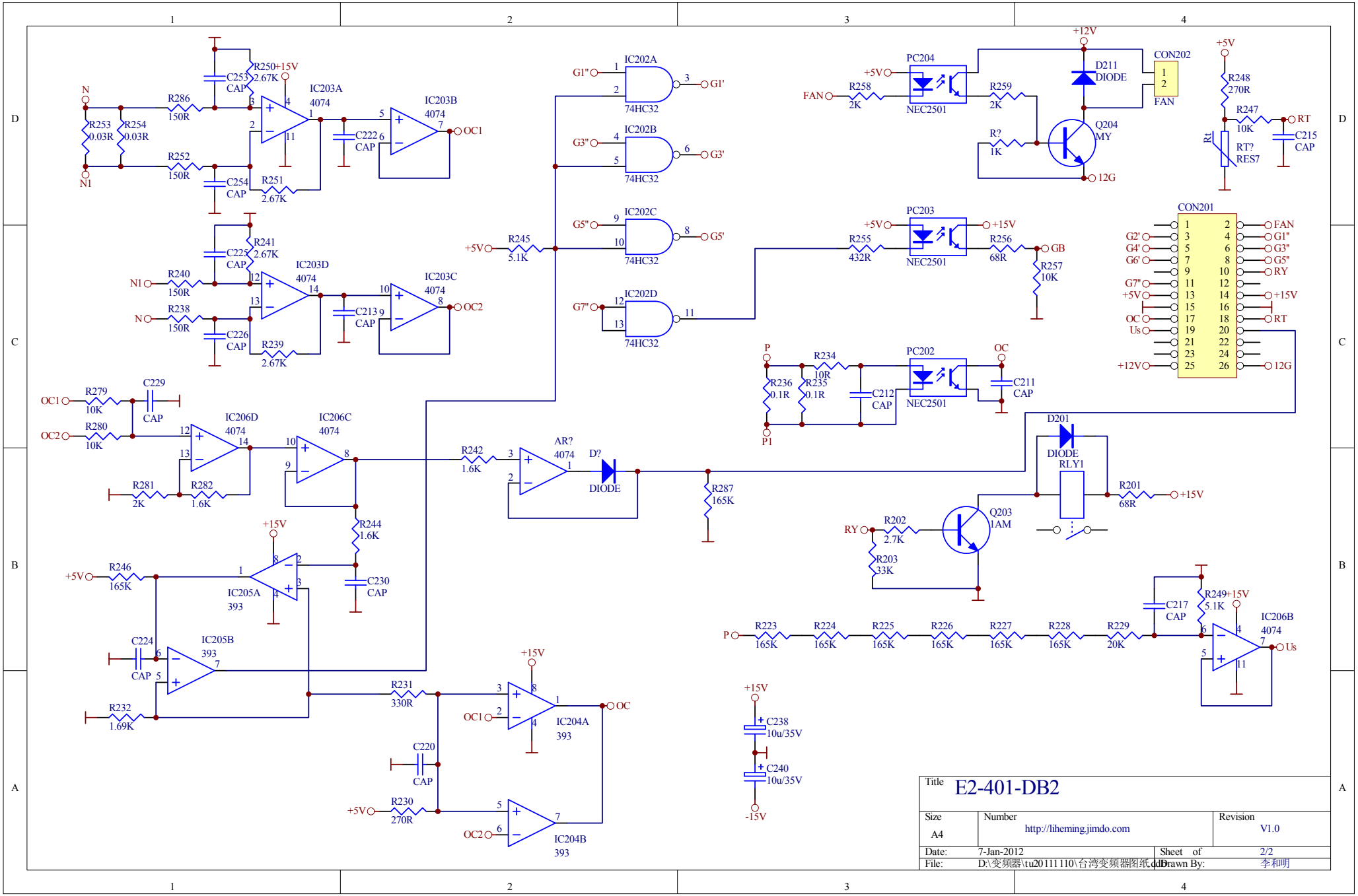
N
N1
R253 0.03R
R254 0.03R
R286 150R
R252 150R
C253 CAP
C254 CAP
R250 2.67K
R251 2.67K
+15V
IC203A 4074
IC203B 4074
C222 CAP
OC1
R241 2.67K
R240 150R
R238 150R
C225 CAP
C226 CAP
R239 2.67K
IC203D 4074
IC203C 4074
C213 CAP
OC2
G1"
G3"
G5"
G7"
IC202A
IC202B
IC202C
IC202D
74HC32
G1'
G3'
G5'
+5V
R245 5.1K
+12V
PC204
NEC2501
FAN
R258 2K
R259 2K
R?
1K
D211 DIODE
Q204 MY
12G
CON202
FAN
R248 270R
R247 10K
RT
C215 CAP
Rt
RT? RES7
PC203
R255 432R
R256 68R
GB
R257 10K
CON201
G2'
G4'
G6'
G7"
OC
Us
+12V
G1"
G3"
G5"
RY
+15V
RT
12G
P
P1
R236 0.1R
R235 0.1R
R234 10R
C212 CAP
PC202
OC
C211 CAP
OC1
OC2
R279 10K
R280 10K
C229 CAP
IC206D 4074
IC206C 4074
R281 2K
R282 1.6K
R244 1.6K
R242 1.6K
AR? 4074
D?
DIODE
R287 165K
D201
DIODE
RLY1
R201 68R
RY
R202 2.7K
R203 33K
Q203 1AM
+5V
R246 165K
IC205A 393
C230 CAP
C224 CAP
IC205B 393
R232 1.69K
R231 330R
IC204A 393
C220 CAP
R230 270R
IC204B 393
OC
R223 165K
R224 165K
R225 165K
R226 165K
R227 165K
R228 165K
R229 20K
C217 CAP
R249 5.1K
IC206B 4074
Us
C238 10u/35V
C240 10u/35V
-15V
Title
E2-401-DB2
Size
A4
Number
http://liheming.jimdo.com
Revision
V1.0
Date:
7-Jan-2012
Sheet of
2/2
File:
D:\变频器\tu20111110\台湾变频器图纸.ddb
Drawn By:
李和明