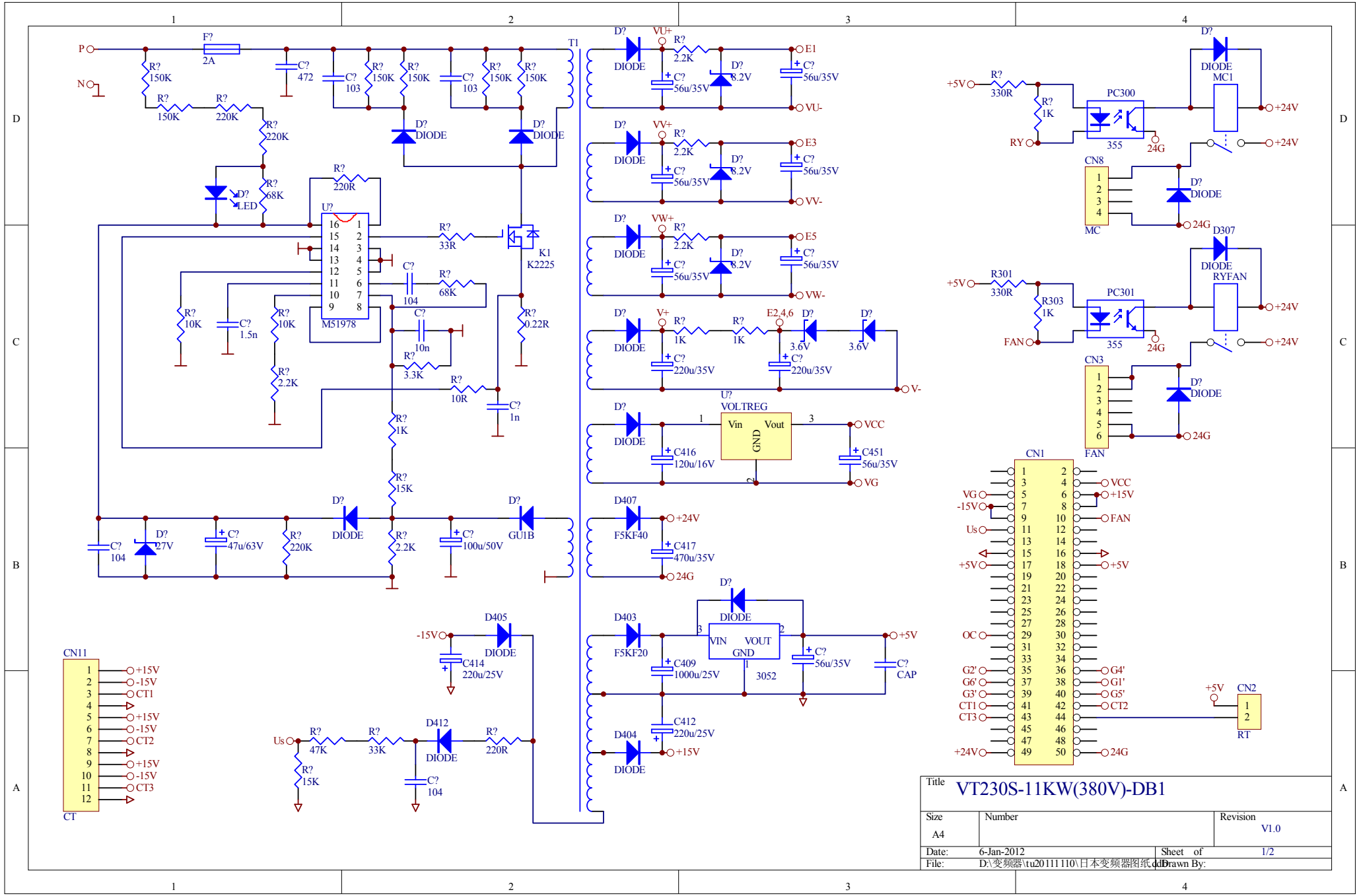

Title	VT230S-11KW(380V)-DB1		
Size A4	Number		Revision V1.0
Date: 6-Jan-2012		Sheet of 1/2	
File: D:\变频器\tu20111110\日本变频器图纸.ddb		Drawn By:	