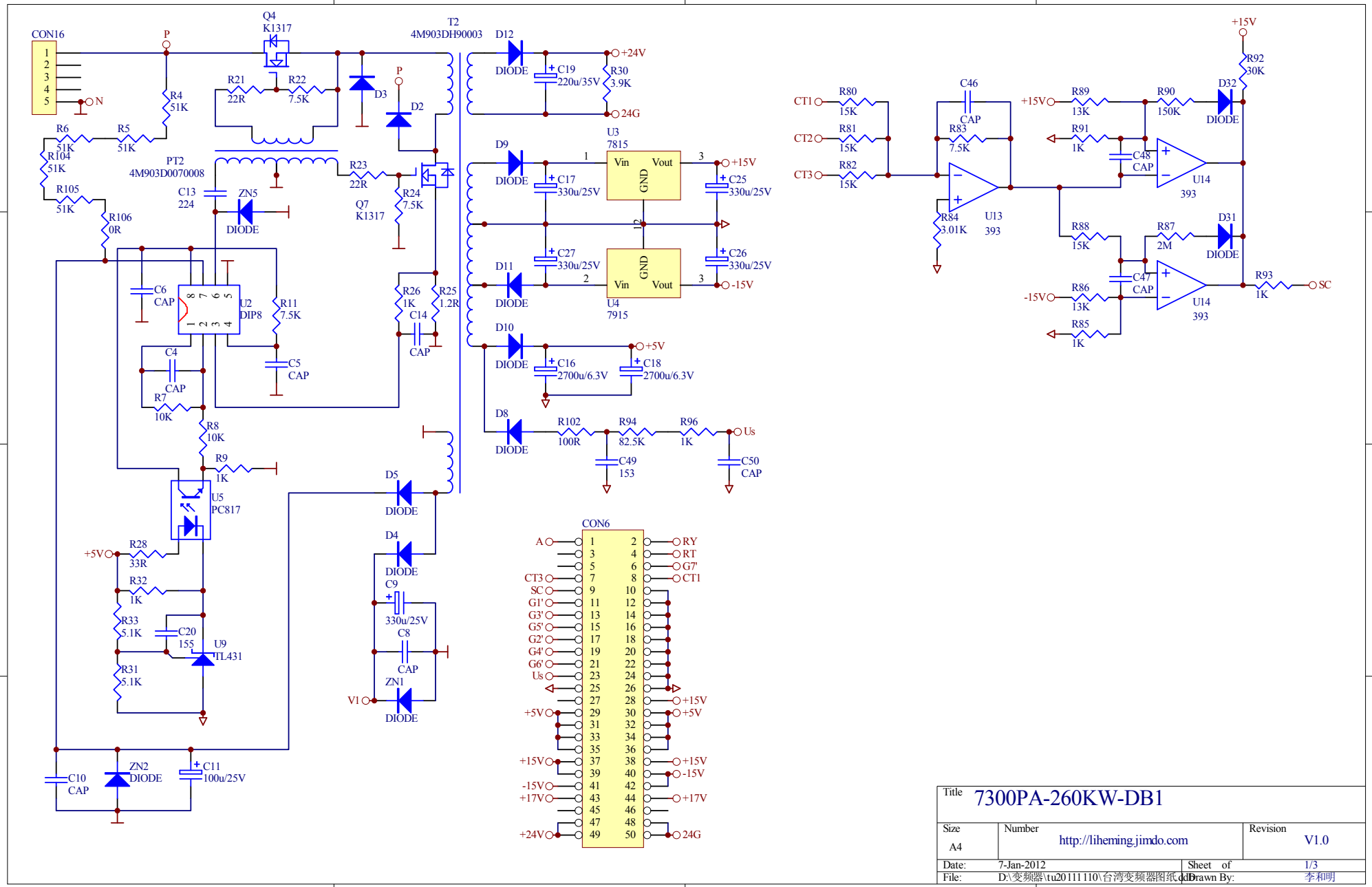

Title	7300PA-260KW-DB1		
Size A4	Number http://liheming.jimdo.com		Revision V1.0
Date:	7-Jan-2012	Sheet of	1/3
File:	D:\变频器\tu20111110\台湾变频器图纸.ddb	Drawn By:	李和明