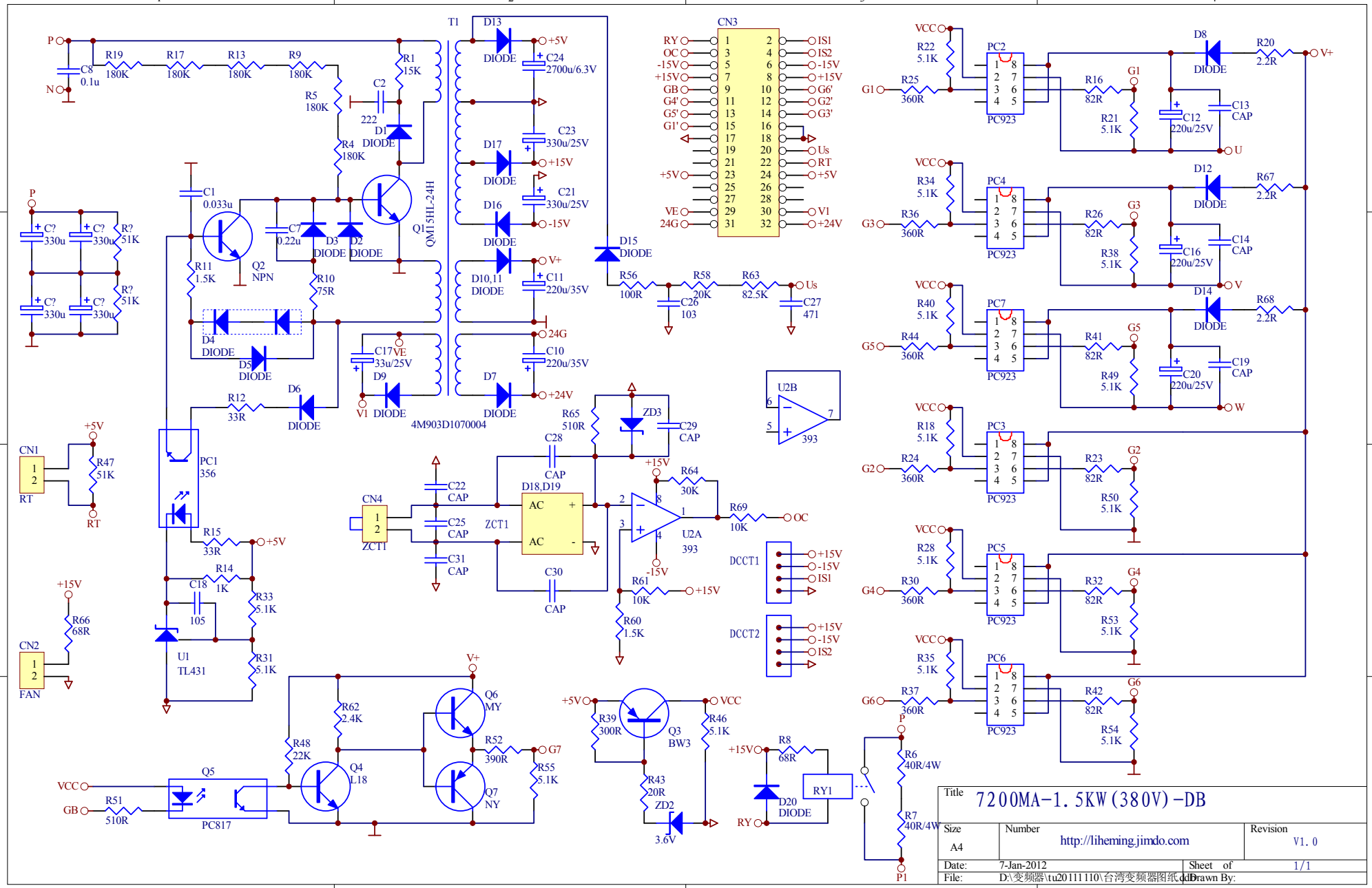
P
N
C8 0.1u
R19 180K
R17 180K
R13 180K
R9 180K
R5 180K
R4 180K
R1 15K
C2 222
D1 DIODE
Q1 QM15HL-24H
T1
C1 0.033u
Q2 NPN
C7 0.22u
D3 DIODE
D2 DIODE
R11 1.5K
R10 75R
D4 DIODE
D5 DIODE
D6 DIODE
R12 33R
C17 33u/25V
VE
D9 DIODE
V1
4M903D1070004
D13 DIODE
+5V
C24 2700u/6.3V
C23 330u/25V
+15V
D17 DIODE
C21 330u/25V
-15V
D16 DIODE
D10,11 DIODE
V+
C11 220u/35V
24G
C10 220u/35V
D7 DIODE
+24V
D15 DIODE
R56 100R
R58 20K
R63 82.5K
C26 103
C27 471
Us
CN3
RY
OC
-15V
+15V
GB
G4'
G5'
G1'
+5V
VE
24G
IS1
IS2
G6'
G2'
G3'
RT
V1
+24V
C? 330u
R? 51K
CN1
RT
R47 51K
PC1 356
R15 33R
R14 1K
C18 105
R33 5.1K
R31 5.1K
U1 TL431
CN2
FAN
R66 68R
R65 510R
ZD3
C29 CAP
C28 CAP
D18,D19
AC
ZCT1
CN4
C22 CAP
C25 CAP
C31 CAP
C30 CAP
R64 30K
R69 10K
U2A 393
R61 10K
R60 1.5K
U2B 393
DCCT1
DCCT2
IS1
IS2
VCC
R22 5.1K
R25 360R
PC2
PC923
R16 82R
R21 5.1K
G1
D8 DIODE
R20 2.2R
C12 220u/25V
C13 CAP
U
R34 5.1K
R36 360R
PC4
G3
R26 82R
R38 5.1K
D12 DIODE
R67 2.2R
C16 220u/25V
C14 CAP
V
R40 5.1K
R44 360R
PC7
G5
R41 82R
R49 5.1K
D14 DIODE
R68 2.2R
C20 220u/25V
C19 CAP
W
R18 5.1K
R24 360R
PC3
G2
R23 82R
R50 5.1K
R28 5.1K
R30 360R
PC5
G4
R32 82R
R53 5.1K
R35 5.1K
R37 360R
PC6
G6
R42 82R
R54 5.1K
R62 2.4K
R48 22K
Q4 L18
Q6 MY
Q7 NY
R52 390R
R55 5.1K
G7
Q5
PC817
R51 510R
GB
R39 300R
Q3 BW3
R46 5.1K
R43 20R
ZD2 3.6V
R8 68R
D20 DIODE
RY1
RY
R6 40R/4W
R7 40R/4W
P1
Title
7200MA-1.5KW(380V)-DB
Size
A4
Number
http://liheming.jimdo.com
Revision
V1.0
Date: 7-Jan-2012
Sheet of 1/1
File: D:\变频器\tu20111110\台湾变频器图纸.ddb
Drawn By: