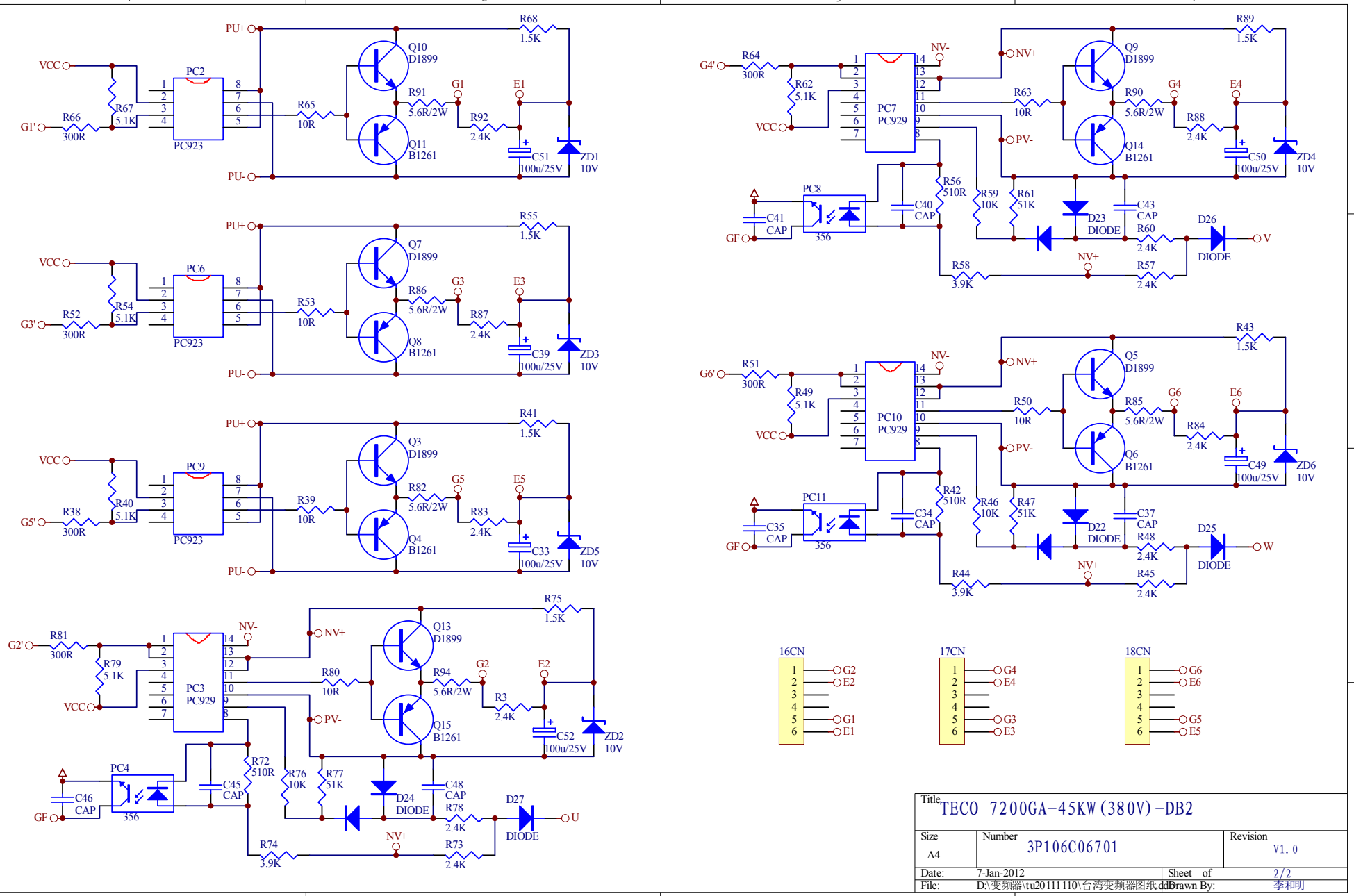

Title TECO 7200GA-45KW(380V)-DB2		
Size A4	Number 3P106C06701	Revision V1.0
Date: 7-Jan-2012	Sheet of 2/2	
File: D:\变频器\tu20111110\台湾变频器图纸.ddb	Drawn By: 李和明	