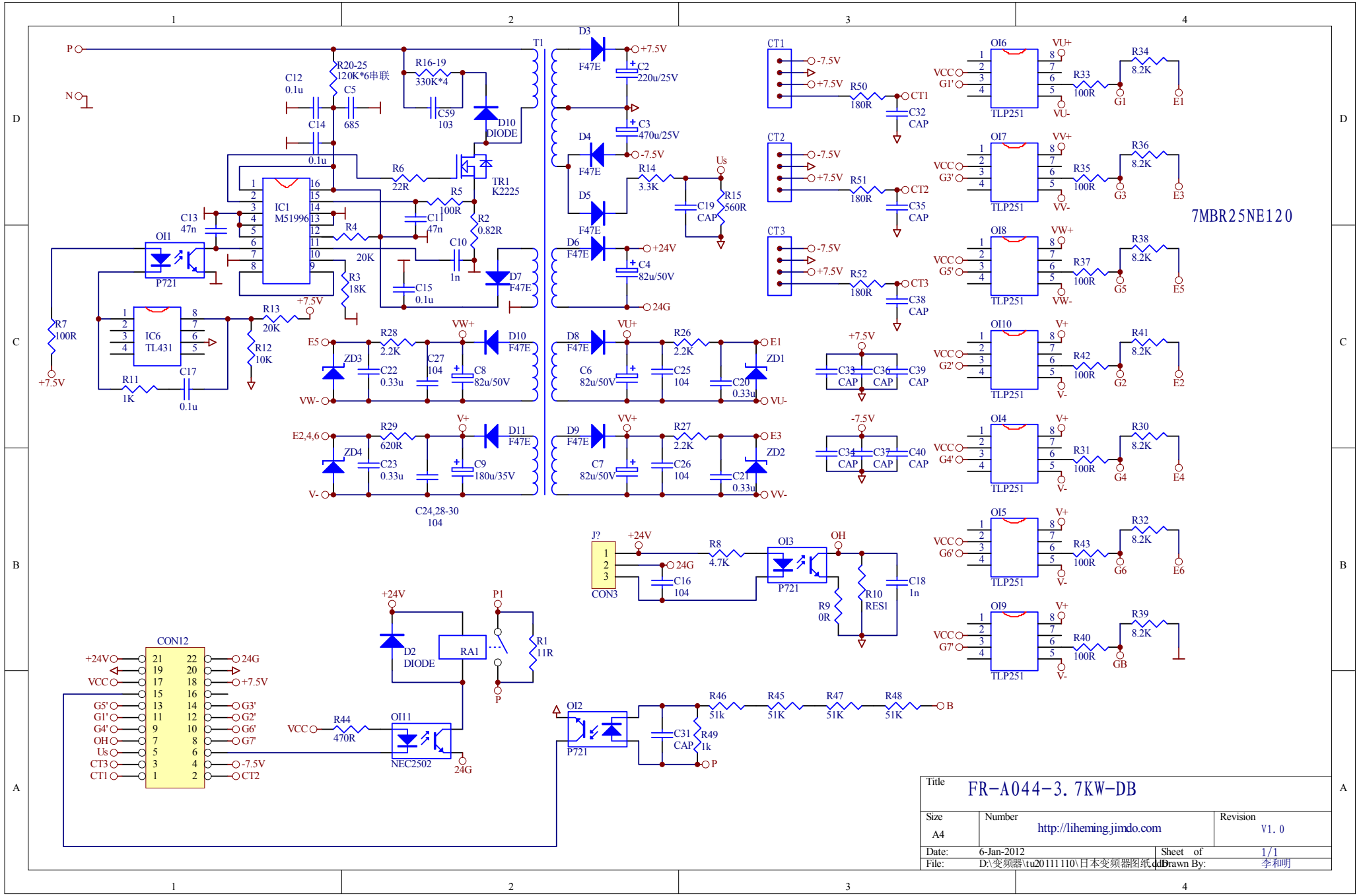
P
N
T1
C12 0.1u
R20-25 120K*6串联
C5 685
R16-19 330K*4
C59 103
D10 DIODE
C14 0.1u
R6 22R
TR1 K2225
IC1 M51996
C13 47n
OI1 P721
R4 20K
R5 100R
C11 47n
R2 0.82R
C10 1n
R3 18K
C15 0.1u
D7 F47E
R7 100R
+7.5V
IC6 TL431
R13 20K
R12 10K
R11 1K
C17 0.1u
D3 F47E
C2 220u/25V
C3 470u/25V
D4 F47E
D5 F47E
R14 3.3K
Us
C19 CAP
R15 560R
D6 F47E
C4 82u/50V
+24V
24G
E5
R28 2.2K
VW+
D10 F47E
ZD3
C22 0.33u
C27 104
C8 82u/50V
VW-
D8 F47E
VU+
R26 2.2K
E1
C6 82u/50V
C25 104
C20 0.33u
ZD1
VU-
E2,4,6
R29 620R
V+
D11 F47E
ZD4
C23 0.33u
C9 180u/35V
V-
D9 F47E
VV+
R27 2.2K
E3
C7 82u/50V
C26 104
C21 0.33u
ZD2
VV-
C24,28-30 104
CT1
-7.5V
+7.5V
R50 180R
C32 CAP
CT2
R51 180R
C35 CAP
CT3
R52 180R
C38 CAP
C33 CAP
C36 CAP
C39 CAP
C34 CAP
C37 CAP
C40 CAP
OI6 TLP251
VU+
VCC
G1'
R33 100R
R34 8.2K
G1
E1
VU-
OI7 TLP251
VV+
G3'
R35 100R
R36 8.2K
G3
E3
VV-
OI8 TLP251
VW+
G5'
R37 100R
R38 8.2K
G5
E5
VW-
OI10 TLP251
V+
G2'
R42 100R
R41 8.2K
G2
E2
V-
OI4 TLP251
G4'
R31 100R
R30 8.2K
G4
E4
OI5 TLP251
G6'
R43 100R
R32 8.2K
G6
E6
OI9 TLP251
G7'
R40 100R
R39 8.2K
GB
7MBR25NE120
J? CON3
+24V
R8 4.7K
OI3 P721
OH
C16 104
R9 0R
R10 RES1
C18 1n
CON12
+24V
VCC
G5'
G1'
G4'
OH
Us
CT3
CT1
24G
+7.5V
G3'
G2'
G6'
G7'
-7.5V
CT2
D2 DIODE
RA1
P1
R1 11R
P
R44 470R
OI11 NEC2502
OI2 P721
R46 51k
R45 51K
R47 51K
R48 51K
B
C31 CAP
R49 1k
Title
FR-A044-3.7KW-DB
Size
A4
Number
http://liheming.jimdo.com
Revision
V1.0
Date: 6-Jan-2012
Sheet of 1/1
File: D:\变频器\tu20111110\日本变频器图纸.ddb
Drawn By: 李和明