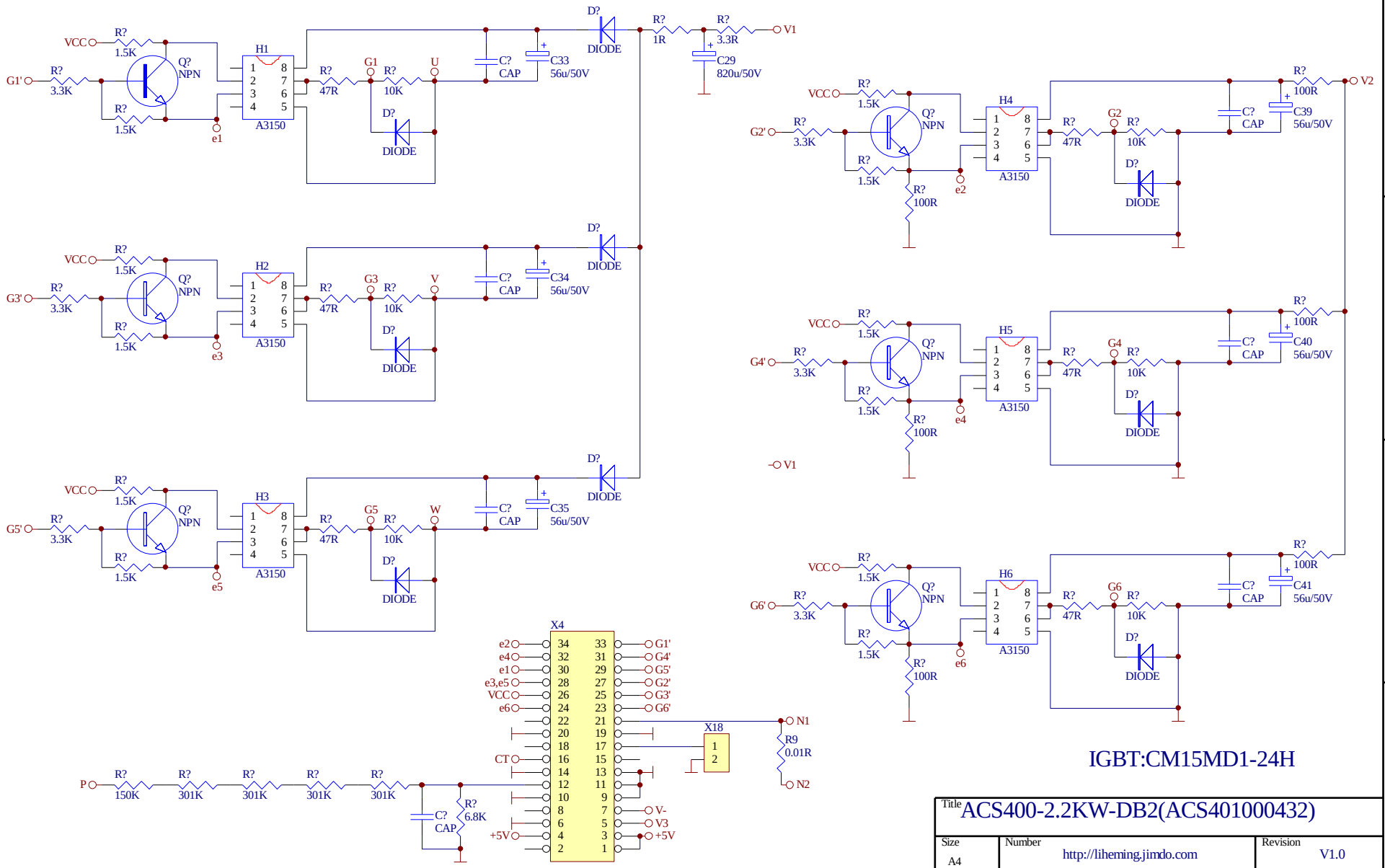

Title ACS400-2.2KW-DB2(ACS401000432)		
Size A4	Number http://liheming.jimdo.com	Revision V1.0
Date: 9-Jun-2012	Sheet of 2/2	
File: D:\ \tu20120222\	Drawn By:	