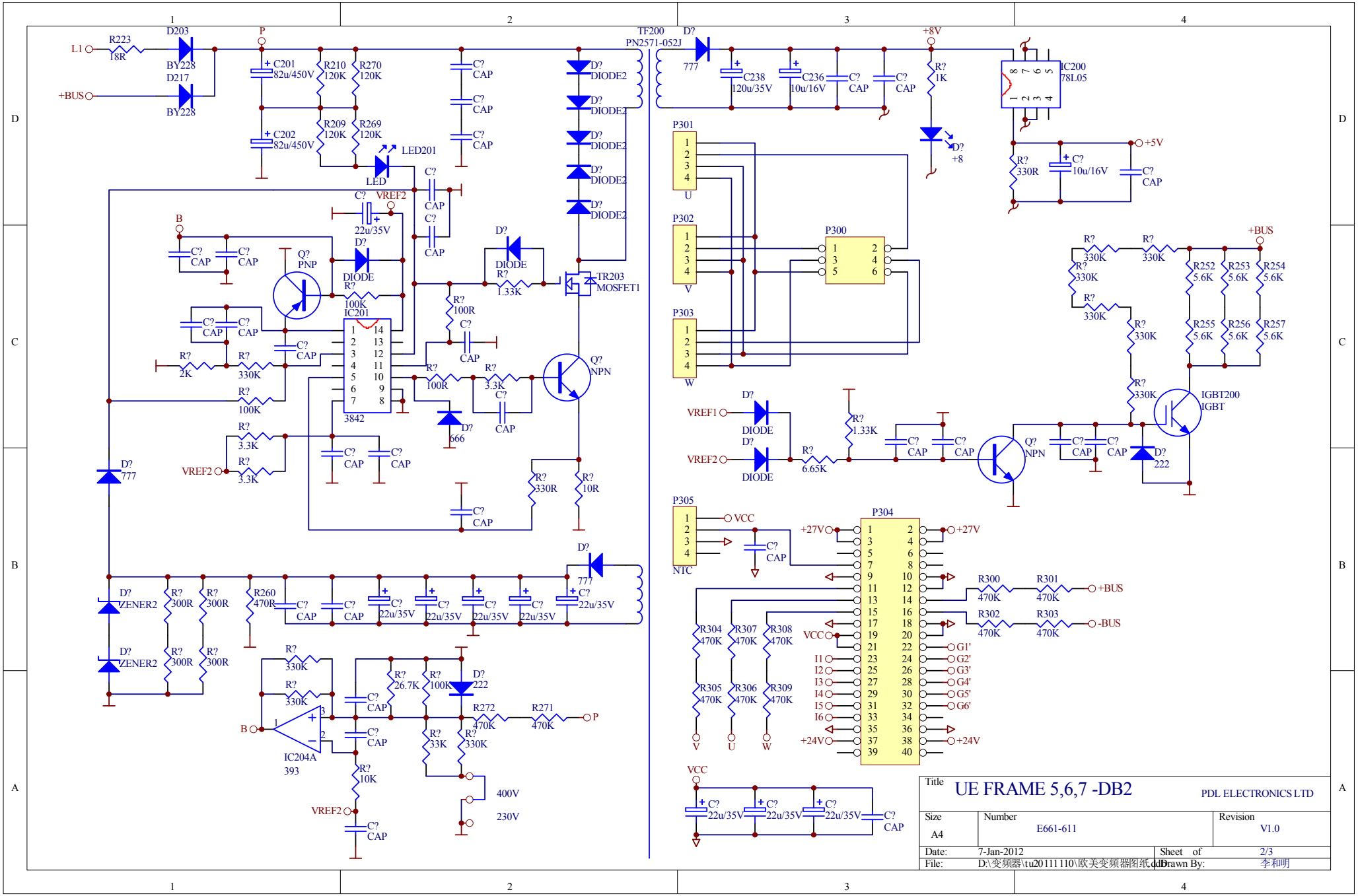
L1
R223
18R
D203
BY228
D217
BY228
+BUS
P
C201
82u/450V
C202
82u/450V
R210
120K
R270
120K
R209
120K
R269
120K
LED201
LED
C?
CAP
C?
VREF2
22u/35V
B
Q?
PNP
D?
DIODE
R?
100K
IC201
3842
R?
2K
R?
330K
R?
100K
R?
3.3K
VREF2
D?
777
D?
ZENER2
R?
300R
R260
470R
C?
22u/35V
D?
666
R?
100R
R?
3.3K
R?
330R
R?
10R
Q?
NPN
TR203
MOSFET1
D?
DIODE2
TF200
PN2571-052J
D?
777
C238
120u/35V
C236
10u/16V
+8V
R?
1K
D?
+8
IC200
78L05
+5V
R?
330R
C?
10u/16V
P301
U
P302
V
P303
W
P300
VREF1
DIODE
VREF2
DIODE
R?
6.65K
R?
1.33K
Q?
NPN
R?
330K
R252
5.6K
R253
5.6K
R254
5.6K
R255
5.6K
R256
5.6K
R257
5.6K
IGBT200
IGBT
D?
222
P305
NTC
VCC
P304
+27V
+24V
G1'
G2'
G3'
G4'
G5'
G6'
I1
I2
I3
I4
I5
I6
R300
470K
R301
470K
R302
470K
R303
470K
-BUS
R304
470K
R307
470K
R308
470K
R305
470K
R306
470K
R309
470K
V
U
W
IC204A
393
R?
26.7K
R?
100K
R272
470K
R271
470K
R?
33K
R?
330K
R?
10K
400V
230V
Title
UE FRAME 5,6,7 -DB2
PDL ELECTRONICS LTD
Size
A4
Number
E661-611
Revision
V1.0
Date:
7-Jan-2012
Sheet of
2/3
File:
D:\变频器\tu20111110\欧美变频器图纸.ddb
Drawn By:
李和明