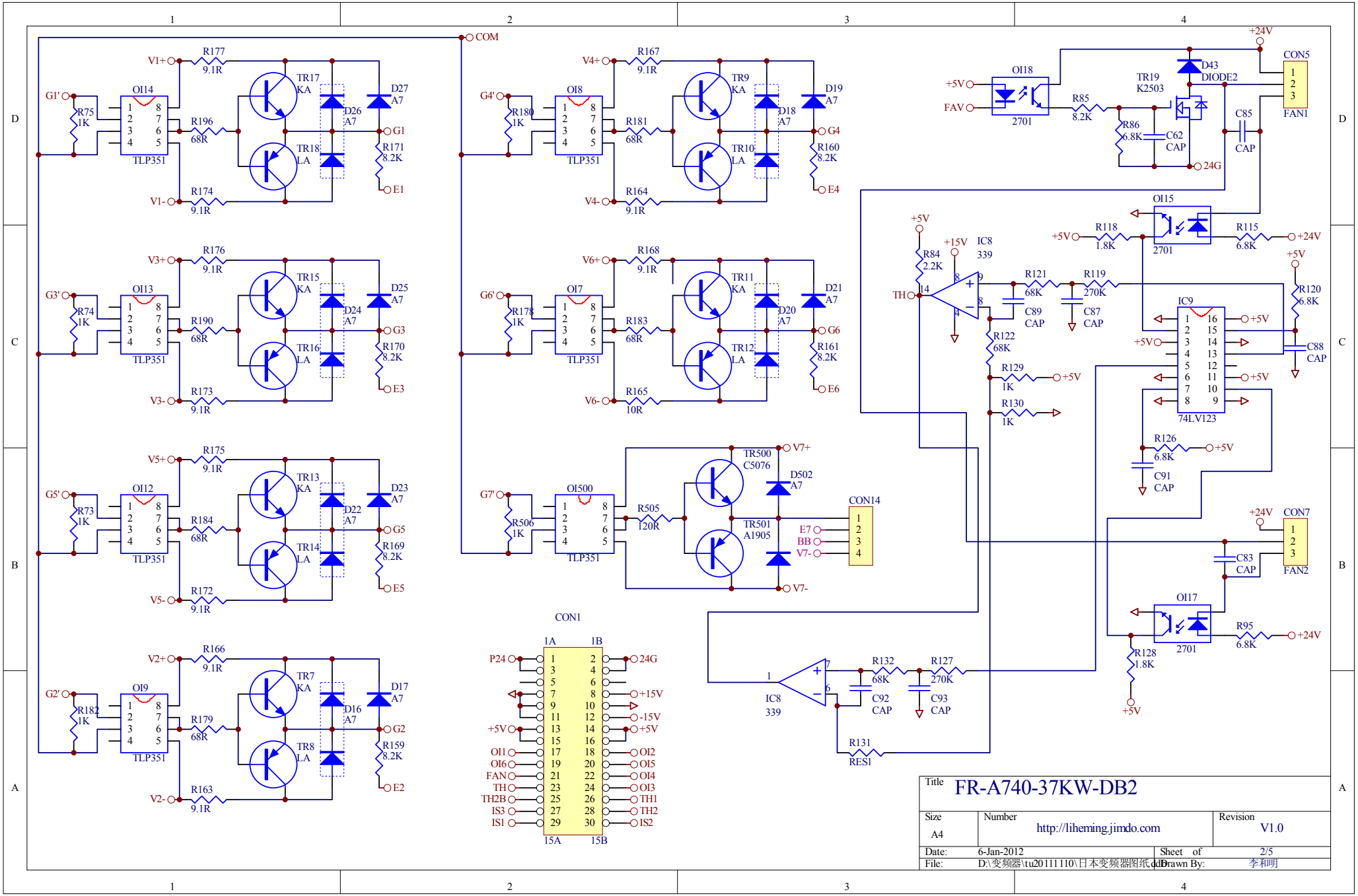
COM
V1+
V1-
G1'
OI14
TLP351
R75 1K
R177 9.1R
R196 68R
R174 9.1R
TR17 KA
TR18 LA
D26 A7
D27 A7
G1
R171 8.2K
E1
V3+
V3-
G3'
OI13
R74 1K
R176 9.1R
R190 68R
R173 9.1R
TR15 KA
TR16 LA
D24 A7
D25 A7
G3
R170 8.2K
E3
V5+
V5-
G5'
OI12
R73 1K
R175 9.1R
R184 68R
R172 9.1R
TR13 KA
TR14 LA
D22 A7
D23 A7
G5
R169 8.2K
E5
V2+
V2-
G2'
OI9
R182 1K
R166 9.1R
R179 68R
R163 9.1R
TR7 KA
TR8 LA
D16 A7
D17 A7
G2
R159 8.2K
E2
V4+
V4-
G4'
OI8
R180 1K
R167 9.1R
R181 68R
R164 9.1R
TR9 KA
TR10 LA
D18 A7
D19 A7
G4
R160 8.2K
E4
V6+
V6-
G6'
OI7
R178 1K
R168 9.1R
R183 68R
R165 10R
TR11 KA
TR12 LA
D20 A7
D21 A7
G6
R161 8.2K
E6
G7'
OI500
R506 1K
R505 120R
TR500 C5076
TR501 A1905
D502 A7
V7+
V7-
E7
BB
V7-
CON14
CON1
1A
1B
15A
15B
P24
+5V
OI1
OI6
FAN
TH
TH2B
IS3
IS1
24G
+15V
-15V
+5V
OI2
OI5
OI4
OI3
TH1
TH2
IS2
+24V
OI18
2701
+5V
FAV
R85 8.2K
R86 6.8K
C62 CAP
TR19 K2503
D43 DIODE2
C85 CAP
CON5
FAN1
24G
OI15
2701
R118 1.8K
R115 6.8K
+24V
+5V
R84 2.2K
+15V
IC8 339
TH
R121 68K
R119 270K
C89 CAP
C87 CAP
R122 68K
R129 1K
R130 1K
IC9
74LV123
R120 6.8K
C88 CAP
R126 6.8K
C91 CAP
CON7
FAN2
C83 CAP
OI17
2701
R95 6.8K
R128 1.8K
IC8 339
R132 68K
R127 270K
C92 CAP
C93 CAP
R131 RES1
Title
FR-A740-37KW-DB2
Size
A4
Number
http://liheming.jimdo.com
Revision
V1.0
Date:
6-Jan-2012
Sheet of
2/5
File:
D:\变频器\tu20111110\日本变频器图纸.ddb
Drawn By:
李和明