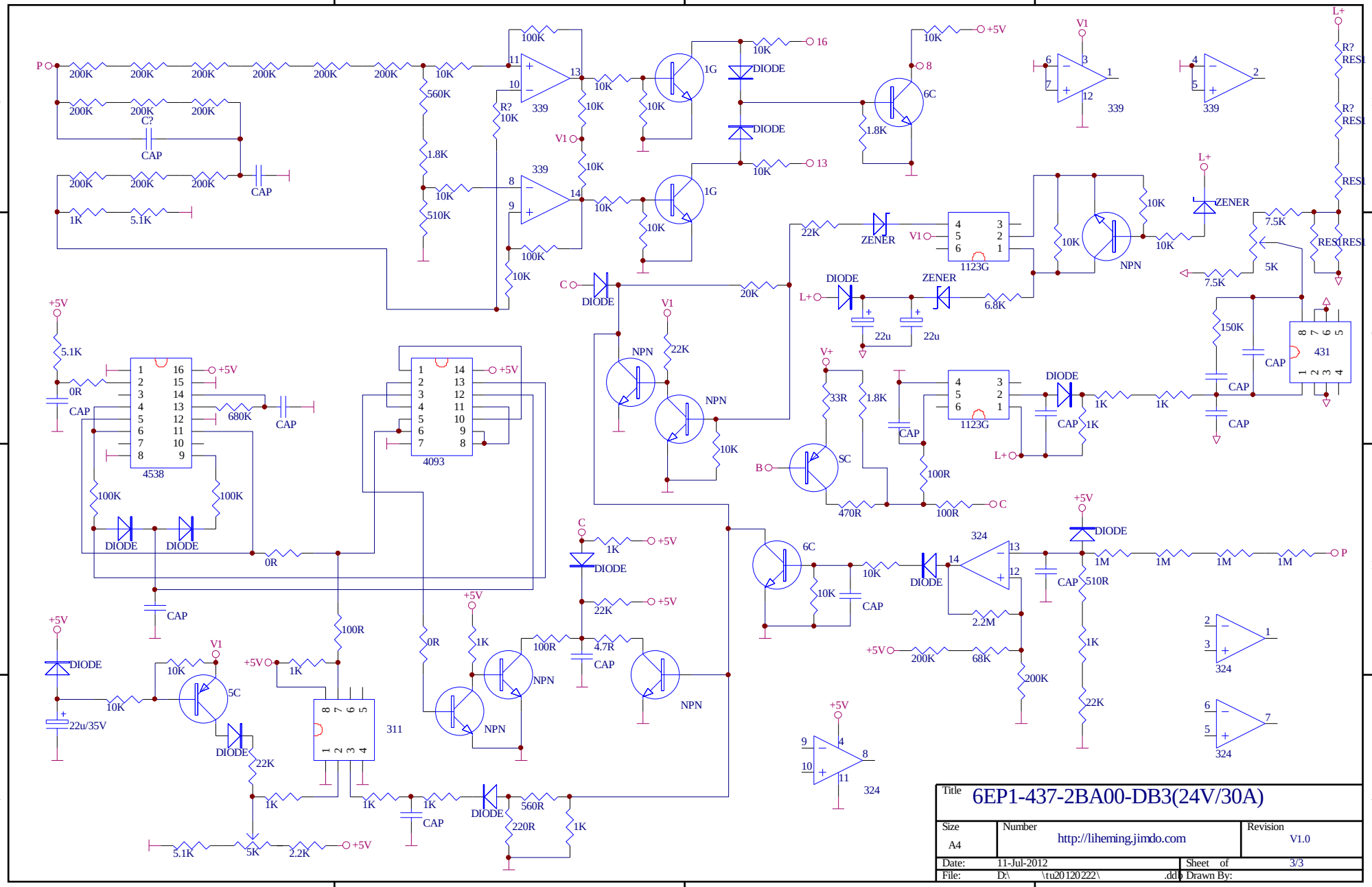

Title	6EP1-437-2BA00-DB3(24V/30A)	
Size A4	Number http://liheming.jimdo.com	Revision V1.0
Date: 11-Jul-2012		Sheet of 3/3
File: D:\ \tu20120222\ .ddb		Drawn By: