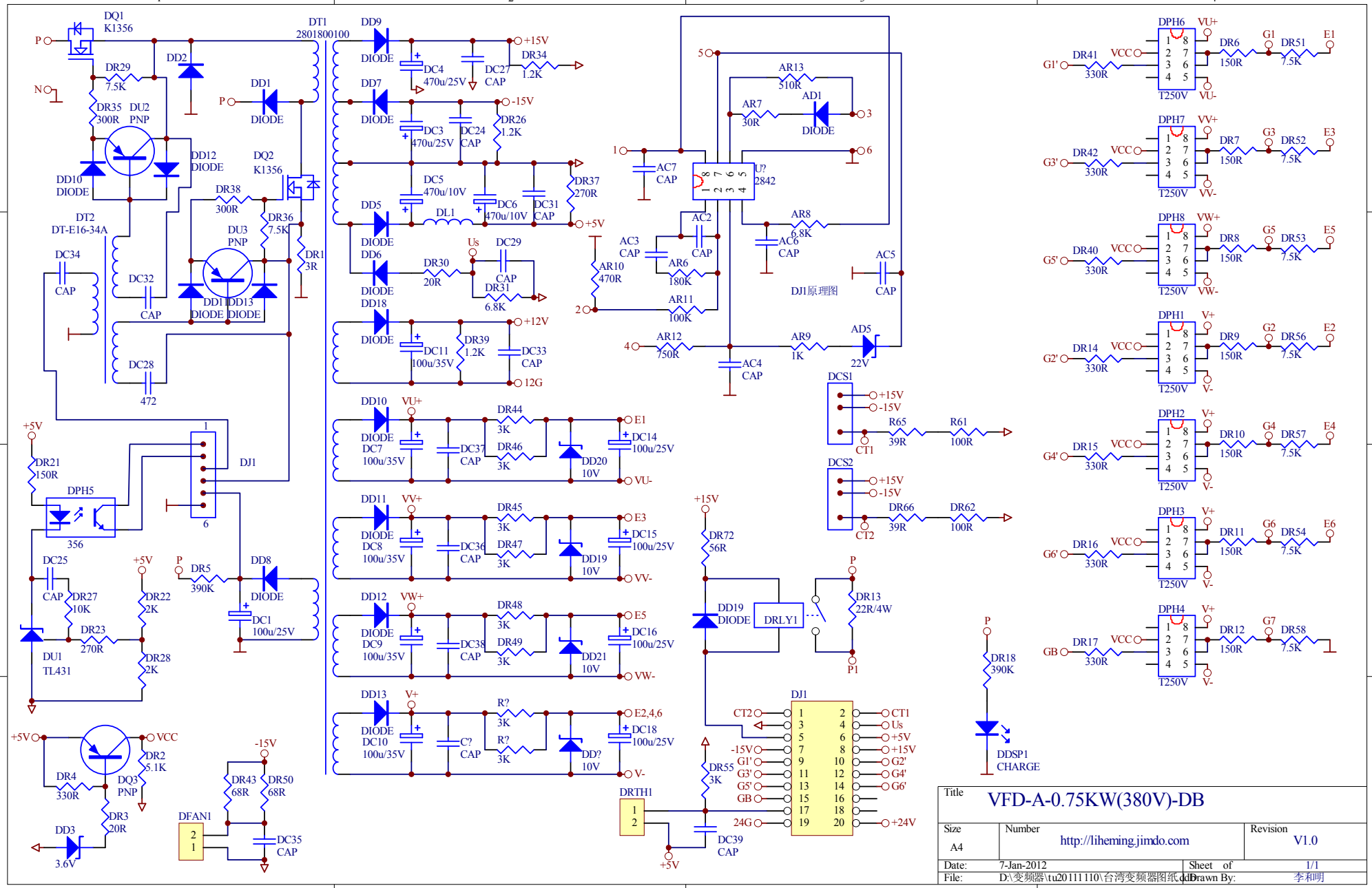
DQ1 K1356
DT1 2801800100
DD9 DIODE
DC4 470u/25V
DC27 CAP
DR34 1.2K
+15V
DD7 DIODE
DC3 470u/25V
DC24 CAP
DR26 1.2K
-15V
DR29 7.5K
DD2
DD1 DIODE
DR35 300R
DU2 PNP
DD10 DIODE
DD12 DIODE
DQ2 K1356
DR38 300R
DR36 7.5K
DR1 3R
DT2 DT-E16-34A
DU3 PNP
DC34 CAP
DC32 CAP
DD1 DIODE
DD13 DIODE
DC28 472
DC5 470u/10V
DL1
DC6 470u/10V
DC31 CAP
DR37 270R
+5V
DD5 DIODE
DD6 DIODE
DR30 20R
Us
DC29 CAP
DR31 6.8K
DD18 DIODE
DC11 100u/35V
DR39 1.2K
DC33 CAP
+12V
12G
U? 2842
AR13 510R
AD1 DIODE
AR7 30R
AC7 CAP
AC2 CAP
AR8 6.8K
AC6 CAP
AC3 CAP
AR6 180K
AR10 470R
AR11 100K
AC5 CAP
DJ1原理图
AR12 750R
AR9 1K
AD5 22V
AC4 CAP
DCS1
DCS2
R65 39R
R61 100R
R66 39R
R62 100R
CT1
CT2
DPH6 T250V
DPH7 T250V
DPH8 T250V
DPH1 T250V
DPH2 T250V
DPH3 T250V
DPH4 T250V
DR41 330R
DR42 330R
DR40 330R
DR14 330R
DR15 330R
DR16 330R
DR17 330R
DR6 150R
DR7 150R
DR8 150R
DR9 150R
DR10 150R
DR11 150R
DR12 150R
DR51 7.5K
DR52 7.5K
DR53 7.5K
DR56 7.5K
DR57 7.5K
DR54 7.5K
DR58 7.5K
VU+
VU-
VV+
VV-
V+
V-
G1
G3
G5
G2
G4
G6
G7
E1
E3
E5
E2
E4
E6
GB
DJ1
DC10 100u/35V
DC7 100u/35V
DC8 100u/35V
DC9 100u/35V
DC37 CAP
DC36 CAP
DC38 CAP
C? CAP
DR44 3K
DR46 3K
DR45 3K
DR47 3K
DR48 3K
DR49 3K
R? 3K
DD20 10V
DD19 10V
DD21 10V
DD? 10V
DC14 100u/25V
DC15 100u/25V
DC16 100u/25V
DC18 100u/25V
E2,4,6
DR72 56R
DD19 DIODE
DRLY1
DR13 22R/4W
DR55 3K
DRTH1
DC39 CAP
24G
+24V
DR21 150R
DPH5 356
DJ1
DC25 CAP
DR27 10K
DR22 2K
DR23 270R
DR28 2K
DU1 TL431
DR5 390K
DD8 DIODE
DC1 100u/25V
DR18 390K
DDSP1 CHARGE
VCC
DR2 5.1K
DR4 330R
DQ3 PNP
DR3 20R
DD3 3.6V
DFAN1
DR43 68R
DR50 68R
DC35 CAP
Title
VFD-A-0.75KW(380V)-DB
Size A4
Number http://liheming.jimdo.com
Revision V1.0
Date: 7-Jan-2012
Sheet of 1/1
File: D:\变频器\tu20111110\台湾变频器图纸.ddb
Drawn By: 李和明