Alexandria University
Faculty of Engineering
Specialized Scientific Programs
CCE Program
Midterm Exam of Spring 2025

جامعة الإسكندرية
كلية الهندسة
البرامج العلمية المتخصصة
برنامج هندسة الحاسبات والاتصالات
امتحان نصف فصل الربيع 2025

Course: EEC 346 Embedded Systems
3rd Level
Time allowed: 1 h (for two parts)
Instructors: Dr. Hossam-Eldin Mostafa, Dr. Nayera Sadek

المقرر EEC 346 الأنظمة المدمجة
المستوى الثالث
مدة الإمتحان :ساعة (للجزئين)

PART II:

Answer ALL the following questions:

Question 1: Answer the following short-answer questions

1) What is the main difference between Microcontroller and FPGA? [redacted]	..../1
2) What are the specifications of the ATMEGA32? ROM Size: [redacted]..... RAM Size: [redacted].. It has [redacted].. general-purpose registers, and [redacted].. special function registers. The X register has [redacted].....bits and it merges .....and [redacted]registers.	.../1.5
3) Write the assembly instruction to configure port B as input using three different forms. [redacted] 1- [redacted] 2- [redacted] 3 [redacted]	..../1
4) Write an assembly code to multiply the contents of two memory locations whose addresses are 0x100 and 0x150 and store the result in memory location 0x200 (for least-significant byte) and 0x201 (for most-significant byte). [redacted]	..../1.5

CamScanner

Question 2: ……/5

Write a C code that checks the input on Port B pin 3. When it becomes 0, the microcontroller reads data from Port A and tests if it is odd or even. If it is odd, LED 1 is turned ON. If it is even, LED 2 is turned ON. If the input on Port B pin 3 becomes 1, the two LEDs are ON.

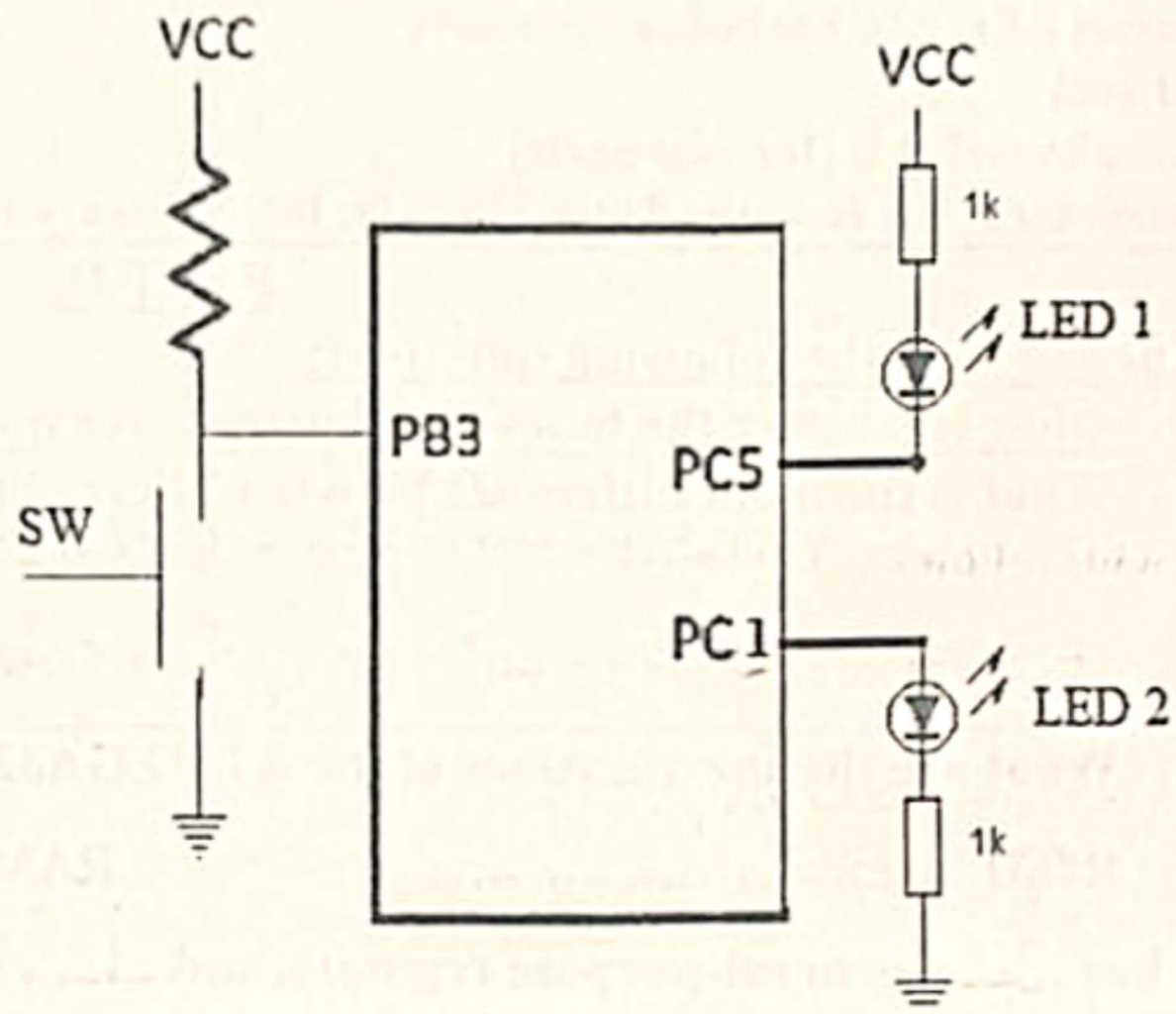

Alexandria University
Faculty of Engineering - SSP
Computer Communications Dept.
April 2025

جامعةالإسكندرية
كليةالهندسة – البرامج العلمية المتخصصة
قسم هندسة الحاسبات و الاتصالات
أبريل 2025

Embedded Systems EEC 346 — **النظم المدمجة**
4th Level — **المستوى الرابع**
Time allowed: 30 minutes — **الزمن: 30 دقيقة**

Assume using ATMEGA32A with 16MHz crystal unless stated otherwise.

Name: …….. ***ID:*** ……..

PART2

a)Write down single C and Assembly language statements to do the following: **2 Marks**

	CodeVision C	*Assembly*
Toggle all bits of PORTC		
Wait forever		
Set bit PD5 as output		
Disable ADC peripheral		

b- It is required to design a digital thermometer using LM35 temperature sensor connected to PORTA.3. The reading is to be displayed on a 16x2 LCD connected in 4 bit mode on PORTA. Assume the ADC peripheral is initialized and 2.56V reference is selected and the LCD CodeVision library is used.

i) Draw the circuit diagram.

ii) Assume the temperature is 20.5 degree centigrade, what would be the output of the ADC?

iii) Write a C program to read the temperature and displays it on the LCD as float number with one digit after the decimal point.

iv) Show the required hardware and software modifications if you want to read the voltage of a 12V battery instead of reading the LM35 sensor data.

v) What would be required to be able to connect a bio sensor that has a maximum reading of 10 microvolts. **8 Marks**

CamScanner

REFS1	REFS0	ADLAR	MUX4	MUX3	MUX2	MUX1	MUX0	ADMUX

ADEN	ADSC	ADATE	ADIF	ADIE	ADPS2	ADPS1	ADPS0	ADCSRA

CamScanner