Ganemulla Gantry

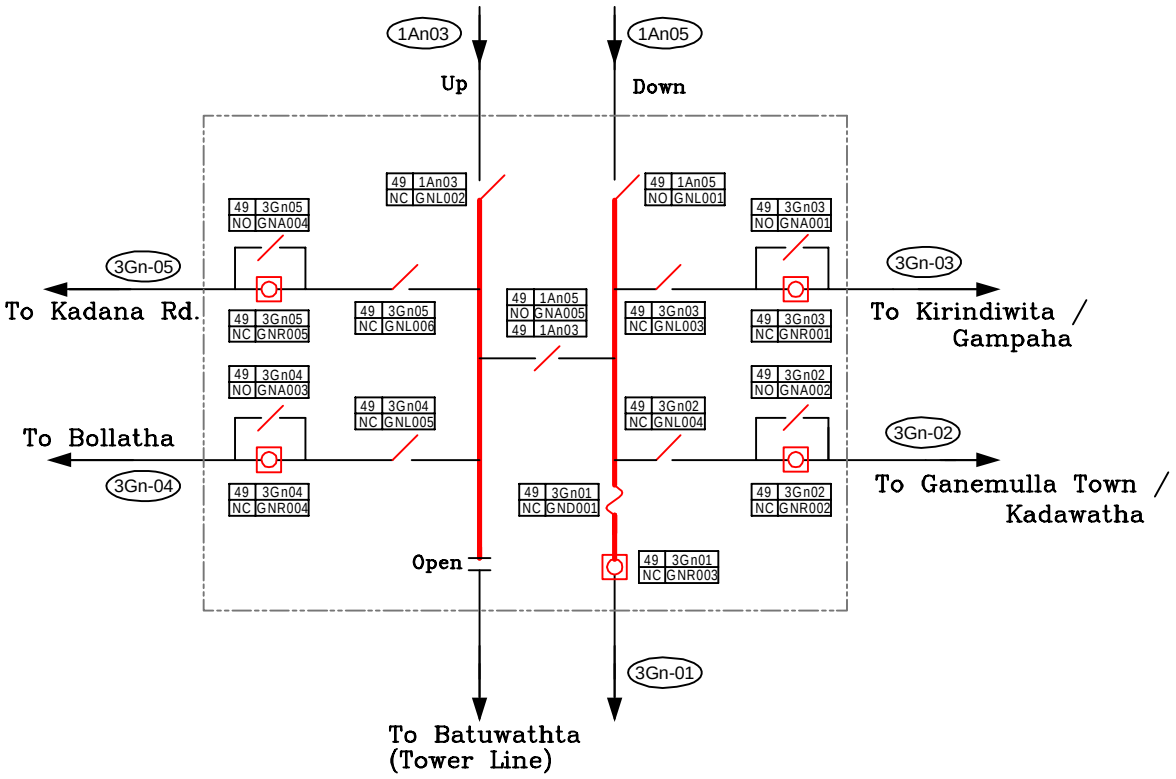

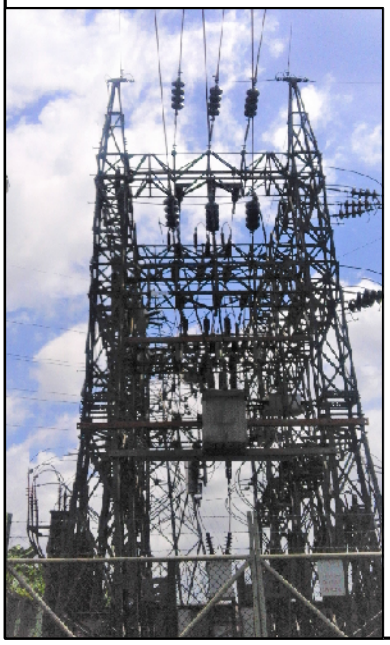

Device	ID	DNP Add
GNR01	49100107	107
GNR02	49100108	108
GNR03	49100109	109
GNR04	49100110	110
GNR05	49100111	111

GPS Position

Latitude - 7° 4'10.23"N

Longitude - 79°56'49.66"E

Symbol				
Code	A	L	D	R
Switchgear	ABS	LBS	DDLO / Link Set	Auto Reclosure

CEYLON ELECTRICITY BOARD
OFFICE OF DGM(WPN)
KANDY ROAD,
KIRIBATHGODA.

GANEMULLA GANTRY SINGLE LINE
GANEMULLA CSC – GAMPAHA

PAGE 25

PREPARED	DRAWN	EE(PL)	DGM(WPN)	SCALE	REVISED
	Amal				15.08.2017
	DRAWING NUMBER				DATE
WPN	WPN / SL / 03 / GN				01.01.2015