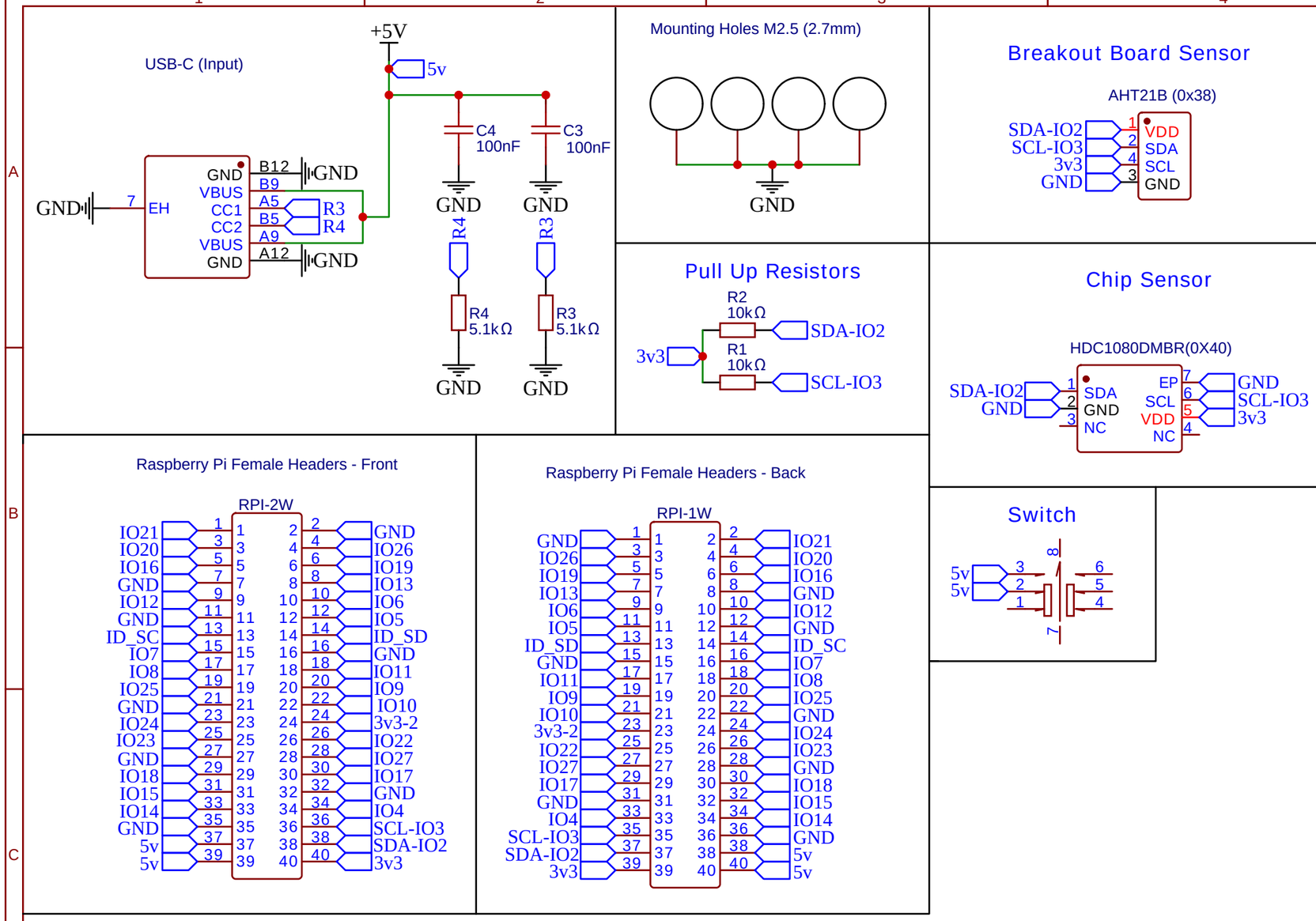

TITLE: AHT21	REV: 1.0
Company: UCSB Stuart Group	Sheet: 1/1
Date: 2025-05-15	Drawn By: paulnguyen@ucsb.edu