BANGLADESH UNIVERSITY OF ENGINEERING AND TECHNOLOGY

Department of Electrical and Electronic Engineering

Course No: EEE 208
Course Title: Electronics Circuits II Laboratory

Project Report

Project Name: **DC to AC Inverter using PWM Switching**

Submitted by:

Name: Md. Nagib Mahfuz
ID: 2006166

Name: Md.Hamidur Rahman
ID: 2006167

Department: EEE
Section: C2
Group: 2
Level: 2
Term: 2

Date of Submission: 16/09/2023

Submitted to:

1. Bejoy Sikder
Lecturer, Department of Electrical and Electronic Engineering
Bangladesh University of Engineering and Technology

2. Azazul Islam
Teaching Assistant, Department of Electrical and Electronic Engineering
Bangladesh University of Engineering and Technology

Table of Contents

1. Abstract…….……....1
2. Introduction…….……..…....1
3. Working Principle…….……1
   3.1 H-Bridge…….…….1
   3.2 Pulse Width Modulation (PWM)…….……2
   3.3 Reference and Carrier Signal Generator…….…….3
   3.3.1 Wein Bridge Oscillator…….…….3
   3.3.2 Multi vibrator…….……4
   3.4 Switching Operation…….……5
   3.5 Output Voltage Generation…….…….5
   3.6 Filtering……5
   3.7 Output Regulation……6
4. Implementation……7
   4.1 Signal Generation……7
   4.1.1 Sin wave by using Wein Bridge Oscillator……7
   4.1.2 Triangular Wave by Multi vibrator……8
   4.2 PWM Generation…….10
   4.3 H-Bridge Switching…….13
   4.4 Filter Design……14
5. Simulation Analysis……15
   5.1 For 50 Hz…….15
   5.2 For 60 Hz…….16
6. Application……...…...17
7. Limitation……....17
8. Conclusion……...…18

1. Abstract

This report presents a comprehensive study on the design, implementation, and simulation of a DC to AC inverter utilizing Pulse Width Modulation (PWM) switching techniques using PSpice. The primary objective of this project is to convert a direct current (DC) input voltage into an alternating current (AC) output voltage with better controllability. The report begins with an overview of the fundamental principles behind PWM switching and its relevance in the context of DC to AC conversion. It explores the key components of the inverter circuit, control logic, and filtering components, highlighting their roles in achieving a stable and high-quality AC output waveform. Besides, this report briefly expounds upon practical applications of the DC to AC inverter using PWM switching as well as the limitations of this project.

2. Introduction

Modern power systems depend on the DC to AC inverter, which enables the conversion of direct current (DC) to alternating current (AC). The design, simulation, and analysis of a DC to AC inverter using the Pulse Width Modulation (PWM) switching technology are the main goals of this project. The main objective of this project is to successfully convert DC power from a source to AC power with efficiency and control for a variety of applications, such as in low-power AC circuits and small AC-powered devices.

3. Working Principle:

3.1 H-Bridge:

The term *H-bridge* is derived from the typical graphical representation of such a circuit. An H-bridge is built with four switches (solid-state or mechanical). When the switches S1 and S4 (according to the first figure) are closed (and S2 and S3 are open) a positive voltage is applied across the load. By opening S1 and S4 switches and closing S2 and S3 switches, this voltage is reversed, allowing reverse operation of the load.

Using the nomenclature above, the switches S1 and S2 should never be closed at the same time, as this would cause a short circuit on the input voltage source. The same applies to the switches S3 and S4. This condition is known as shoot-through.

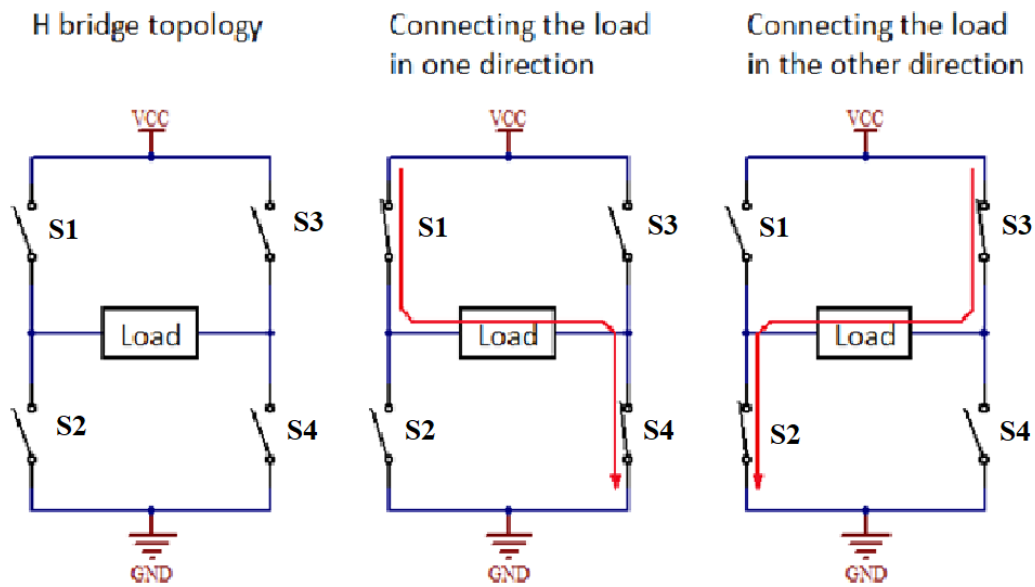

3.2 Pulse Width Modulation (PWM)

PWM, also known as pulse width modulation, is a widely used control technique that produces analog signals from digital devices like microcontrollers. As a result, a train of square wave-shaped pulses will be present in the signal that is created. The wave will therefore either be high or low at any given time.

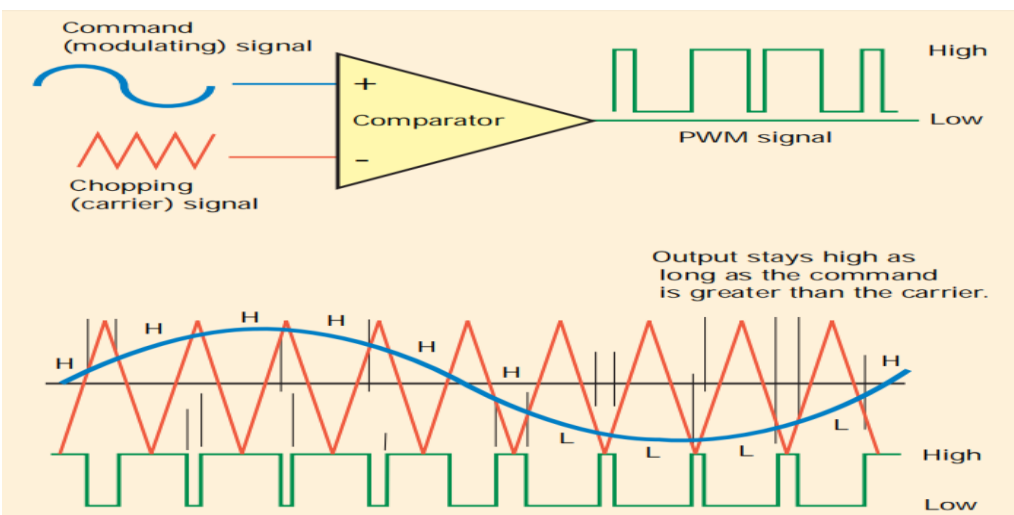

The pulse width modulating signal is generated using a comparator. The modulating Sinusoidal signal forms one part of the input to the comparator, while the Triangular wave forms the other part of the input. The comparator compares two signals and generates a PWM signal as its output waveform.

3.3 Reference and Carrier Signal Generator

3.3.1 Wein Bridge Oscillator

An electronic oscillator is an electronic circuit that produces a periodic, oscillating electronic signal, often a sine wave or a square wave. Oscillators convert direct current (DC) from a power supply to an alternating current (AC) signal.

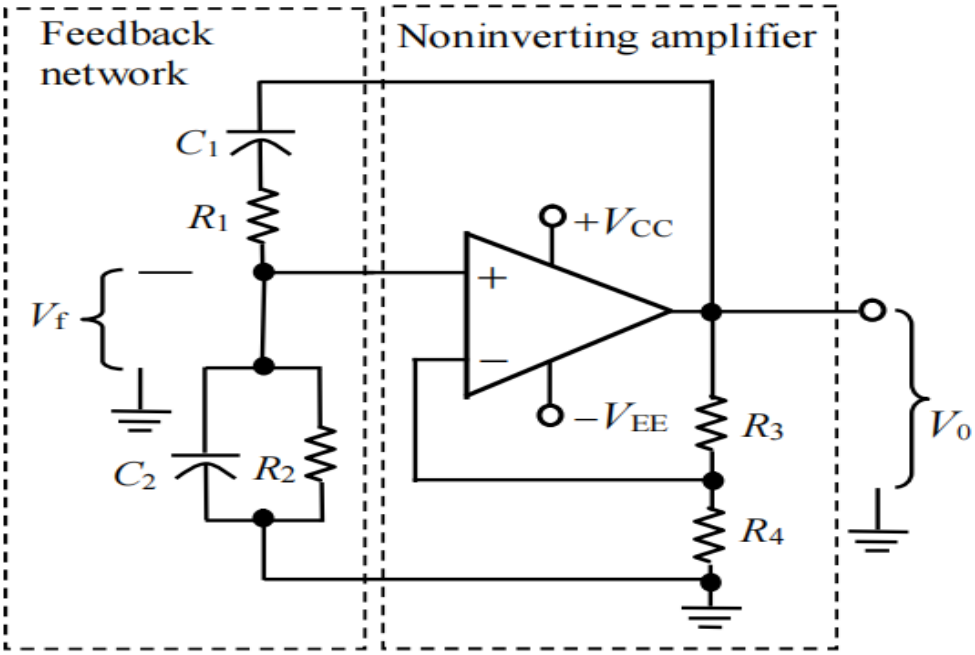

An oscillator circuit in which a balanced bridge is used as the feedback network to make 180 degree phase shift (general condition for an oscillator) is the Wien bridge oscillator.
The theoratical frequency of the oscillation by an oscillator circuit is given by, $f = 1/(2\pi RC)$. In Figure, R_1 and R_2 have equal value (R) and C_1 and C_2 have same value (C).
For the Wien Bridge Oscillator, the R_3/R_4 ratio is important. Because,

I. If the ratio is approximately equal to 2, a sinusoidal oscillation is maintained.
II. When the ratio is greater than 2, a square wave oscillation is produced and
III. when the ratio is less than 2, the oscillation tends to decay.

3.3.2 Multi vibrator

Astable multi vibrator: It is a type of multivibrator also termed as a free running multivibrator. It is called so because here the state changes on its own after some predetermined time interval and thus does not require a triggering pulse. Here the output of the circuit simply oscillates between high and low state freely. Hence is just an oscillator. Astable multivibrator generates square wave. The figure below shows the configuration of an astable multivibrator:

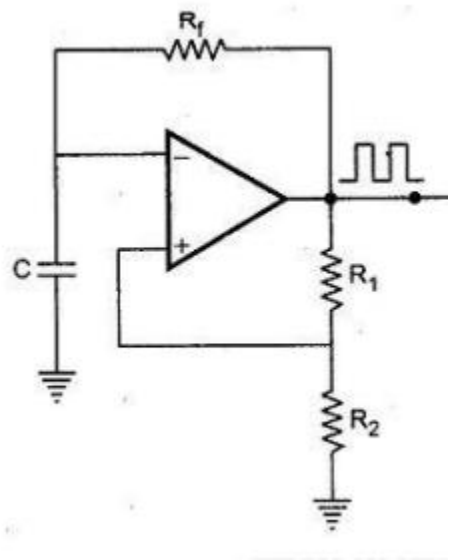

A Triangular Wave Generator Using Op amp can be formed by simply connecting an integrator to the square wave generator. So by passing the output of astable multivibrator through a integrator circuit we can achieve triangular waveform.

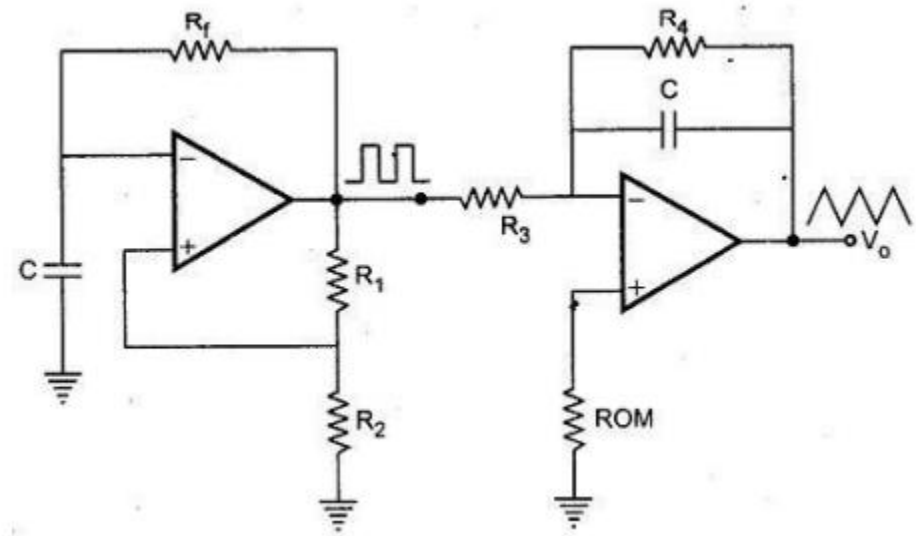

3.4 Switching Operation

In H-Bridge configuration, When Modulating signal is higher than the Carrier signal the upper switch S1 is turned on and lower switch S2 is turned off. Alternately when Carrier signal is higher than the Modulating signal, switch S1 is turned off and switch S2 is turned on.

For switch S3 & S4 Modulating signal (sinusoidal wave) is 180 degrees out of phase from the previous one. But also, in that case when Modulating signal is higher than the Carrier signal, the upper switch S3 is turned on and lower switch S4 is turned off. Alternately when Carrier signal is higher than the Modulating signal, switch S3 is turned off and switch S4 is turned on.

3.5 Output Voltage Generation

The inverter achieves output voltage synthesis by cyclically toggling the upper and lower switches, which results in the formation of a voltage waveform across the connected load. The magnitude of the voltage applied to the load is governed by the duty cycle within the PWM signal. Through meticulous adjustment of this duty cycle, the inverter can produce an output voltage that faithfully replicates the shape and characteristics of a sinusoidal waveform.

3.6 Filtering

Although the synthesized waveform may not precisely match a sinusoid due to inherent harmonic content resulting from the square nature of the PWM signal, a common approach to refine the AC output involves integrating a post-inverter low-pass filter. This filter is typically positioned downstream from the inverter's output. Its primary function is to selectively diminish the higher-frequency harmonic components present in the waveform. By attenuating these higher-frequency elements, the filter yields a smoothed AC waveform that closely approaches the desired sinusoidal shape.

For filtering purpose, we have used Low Pass Butterworth Filter. The low pass filter is built using one low pass filter of -40db/decade cascaded with another of -20dB/decade to give an overall roll-off of -60dB/decade.

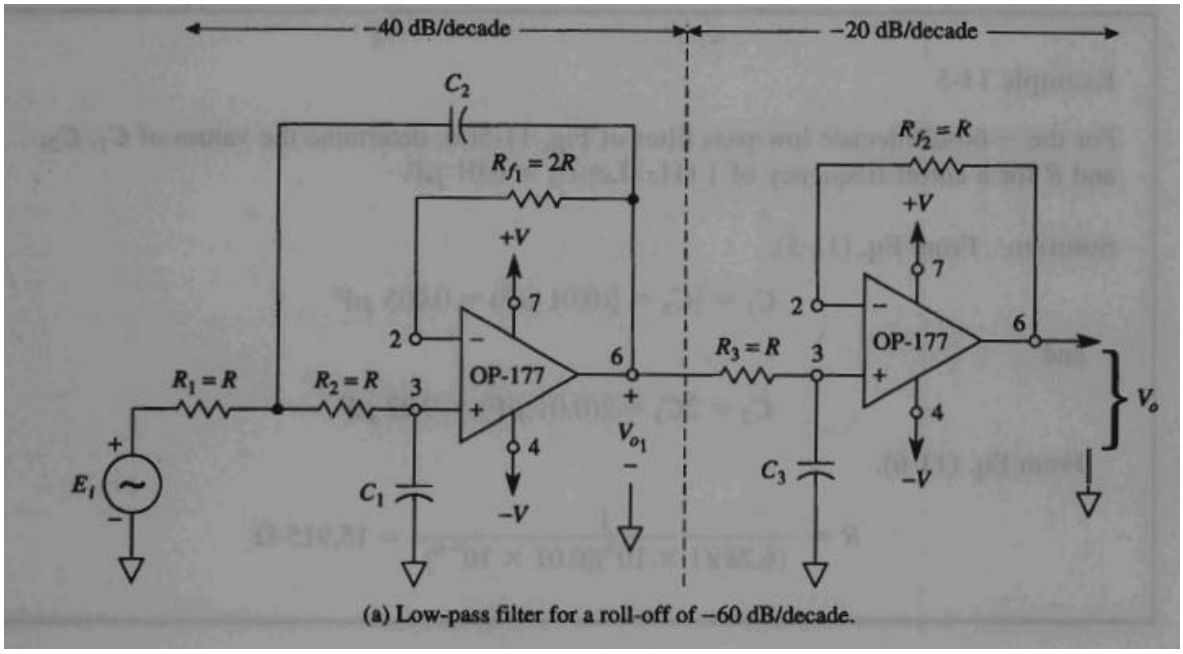

(a) Low-pass filter for a roll-off of −60 dB/decade.

We have followed the following design procedure for designing the LP Butterworth Filter.

1. Choose cutoff frequency(fc)
2. Selected C3 between .001 to .1µF
3. Make C1=0.5*C3 and C2=2*C3
4. Calculate R=$\frac{1}{2\pi f C}$
5. Make R1=R2=R3=R
6. Rf=2R and Rf2=R. For best result we pick the value of R between 10 to 100kΩ

3.7 Output Regulation

To precisely control the characteristics of the synthesized AC waveform, two key parameters can be adjusted: the frequency of the PWM signal and the modulation index, which represents the ratio of the reference signal's amplitude to the carrier frequency. By manipulating these parameters, it becomes possible to achieve specific output frequencies, such as 50Hz or 60Hz, which correspond to standard sinusoidal AC signals. This level of control ensures that the inverter can provide AC power tailored to the requirements of various applications, accommodating both 50Hz and 60Hz frequencies commonly used in electrical systems worldwide, making it versatile and adaptable for different power needs.

4. Implementation:

4.1 Signal Generation:

To produce PWM signal, we need two types of signal. Firstly, we need a reference signal which is a sinusoidal of our desired frequency and secondly, we need a carrier signal to compare with the reference signal. Here the carrier signal is triangular signal which have a lot higher frequency than that of the reference signal. So ,we generate these signals using our theory and practices performed under EEE 208 course.

4.1.1 Sinusoidal signal using Wein Bridge:

We generate a 50Hz sustained pure sinusoidal signal using Wein Bridge Oscillator.

Schematic Diagram:

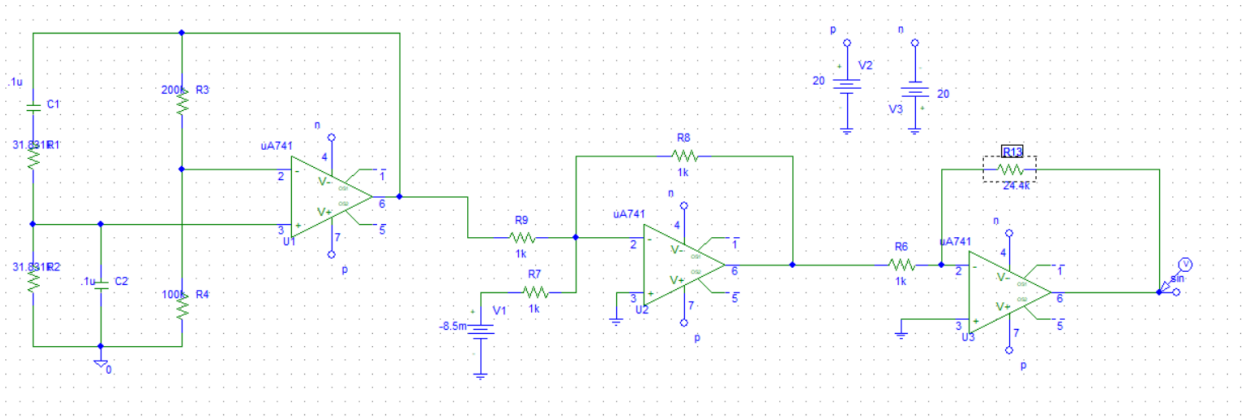

Output:

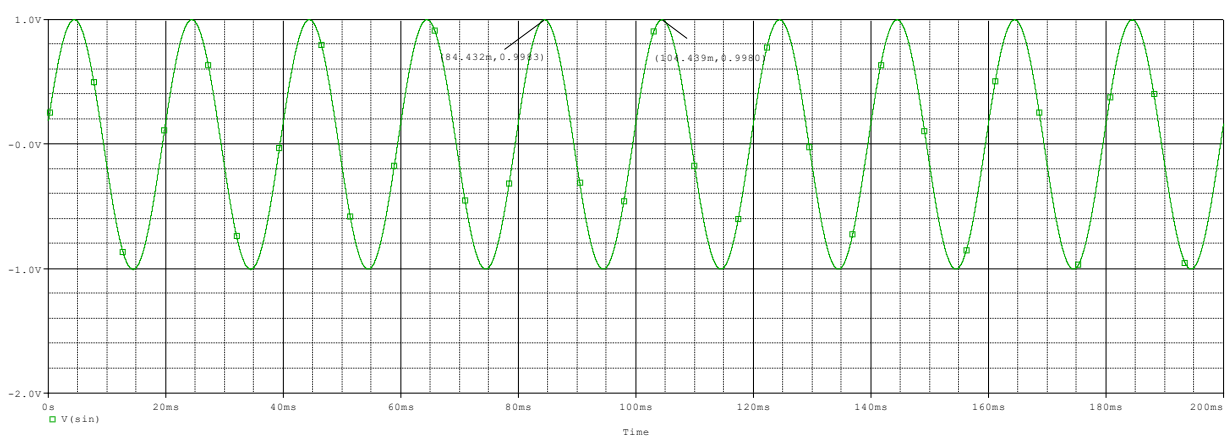

T=104.439m-84.432m =20.007m f=1/T=49.98 ≈ 50Hz

Necessary Calculation and Explanation:

f = 50Hz

we know, $f=\frac{1}{2\pi RC}$ Let, C= 0.1uF

$R=\frac{1}{2\pi*.1*10^{-6}*50}$ =31.831kΩ

For sustained sinusoidal signal, according to our circuit, R3/R4 must be equal to 2. We selected R4=100kΩ and R3= 200kΩ.

Then in the later part of the schematic i.e. after the implementation of Wein Bridge oscillator we have get a sinusoidal which is not having the equal p-p value. So we have added a DC voltage to have the zero crossed signal by using a inverting amplifier of unity gain. Then we have generated a 1V p-p sinusoidal waveform by multiplying it with require gain by using a inverting amplifier. Thus we have generate a 1V p-p 50 Hz sinusoidal signal.

4.1.2 Triangular signal using Astable Multi vibrator:

At first we generate a 1kHz square wave by Astable multi vibrator. Then we pass the output through the integrator circuit to generate triangular signal of the same frequency.

Schematic Diagram:

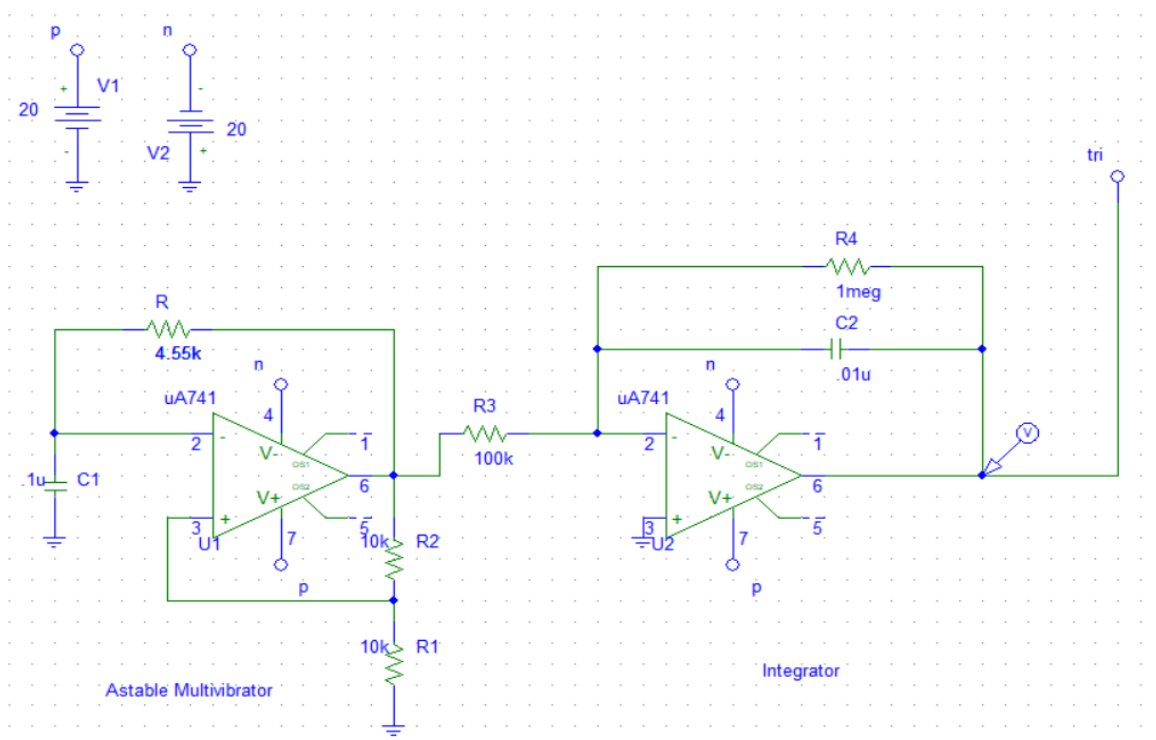

Output:

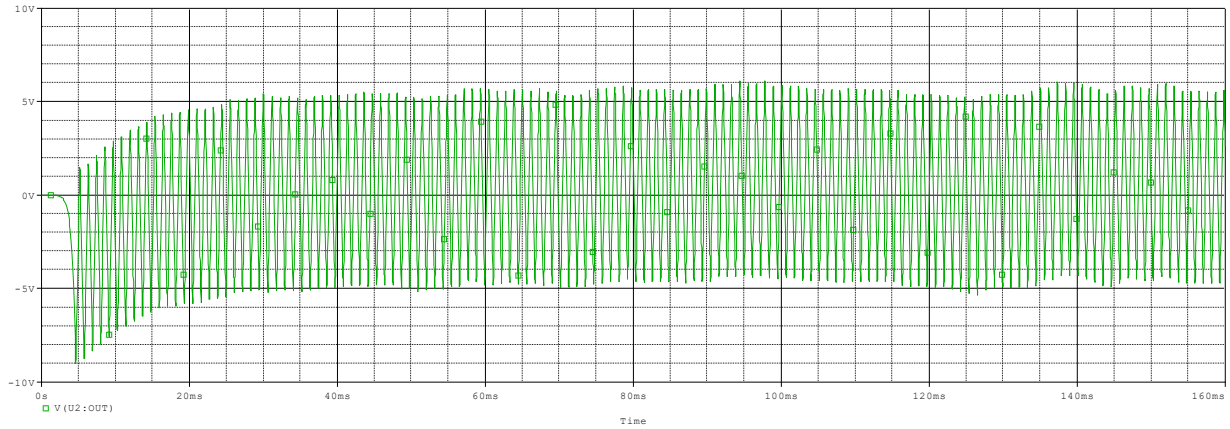

Initially for a short time, we have transient. If we neglect the initial transient part, then it our required triangular signal.to calculate the frequency, here the close look of output:

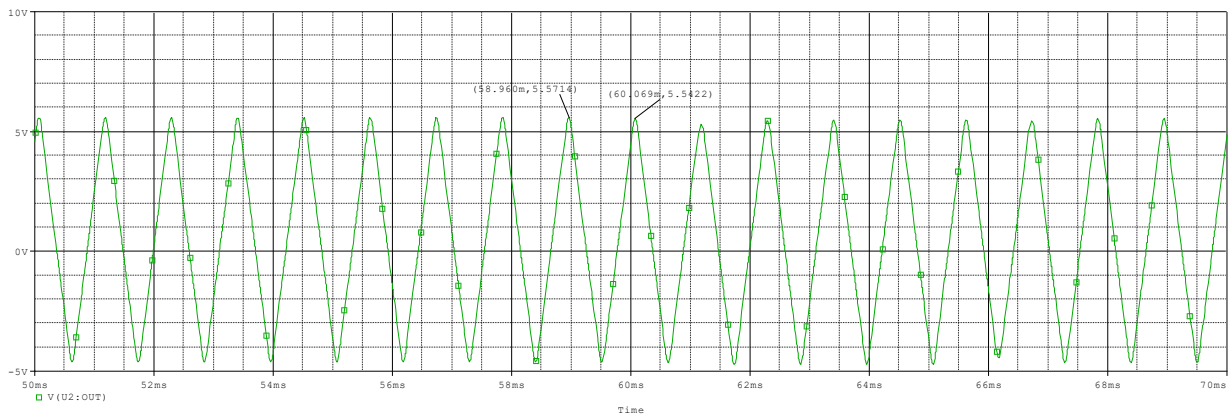

T= 60.06m-58.960m = 1.109m f=1/T = 901Hz

Necessary Calculation and Explanation:

For Astable Multivibrator, we know, time period, T=$2RCln\left(\frac{1+\beta}{1-\beta}\right)$ where β=$\frac{R2}{R1+R2}$

Let, R1=R2= 10K , C=0.1 µF and f=1KHz so T= 1ms.

$1 * 10^{-}3 = 2 * R * .1 * 10^{-}6 * ln(3)$

R=4.5512k

For integrator circuit, the R3*C2 should match the T=1ms.

So, R3*C2≈ 1ms. Let, C=.01 uF so, R3= 100kΩ

For better stability we have R4=10*R3=1MΩ

4.2 PWM Generation:

To generate pulse width modulated signal, we used comparator circuit. In the input side of comparator circuit we need two types of signal-a reference signal and a carrier signal. Here reference signal is 50Hz sinusoidal signal and carrier signal is For our switching purpose, we generated 4 PWM signals.

Schematic Diagram:

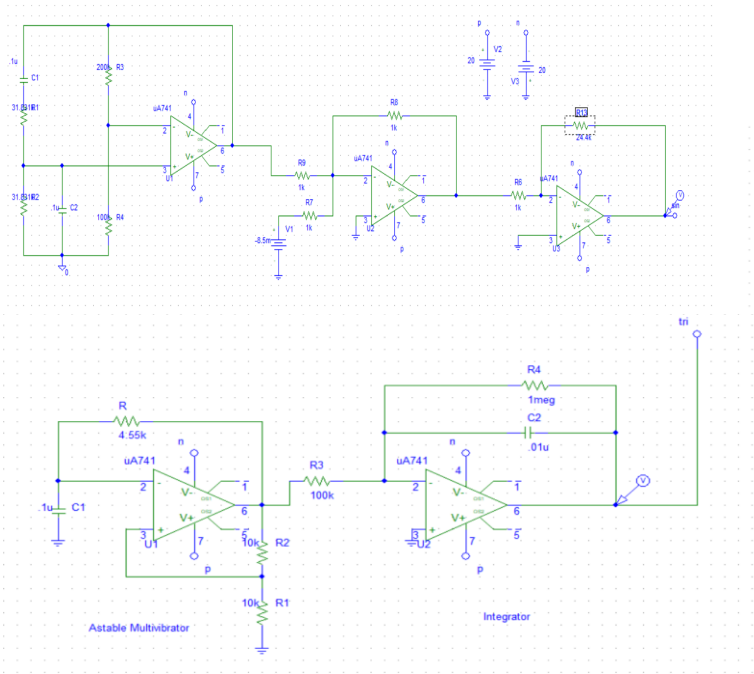

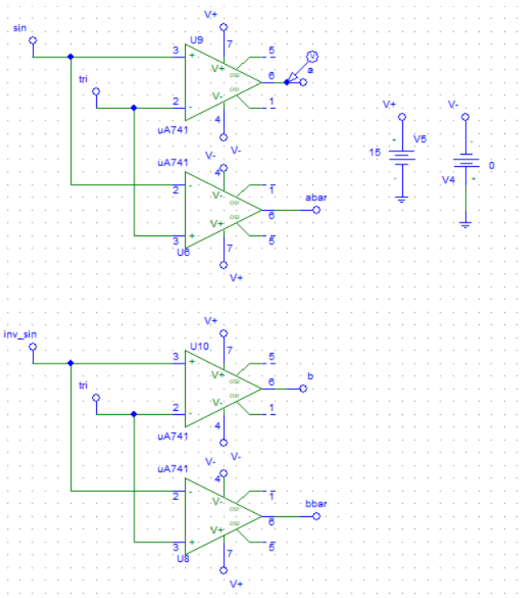

PWM-a: To generate PWM-a signal , we give reference sinusoidal signal to the non-inverting terminal and the carrier triangular signal in inverting terminal. Whenever the reference signal is higher than the carrier, we'll get a high pulse otherwise a low pulse. Thus, a pulse width modulated signal is generated. We named is as PWM-a.

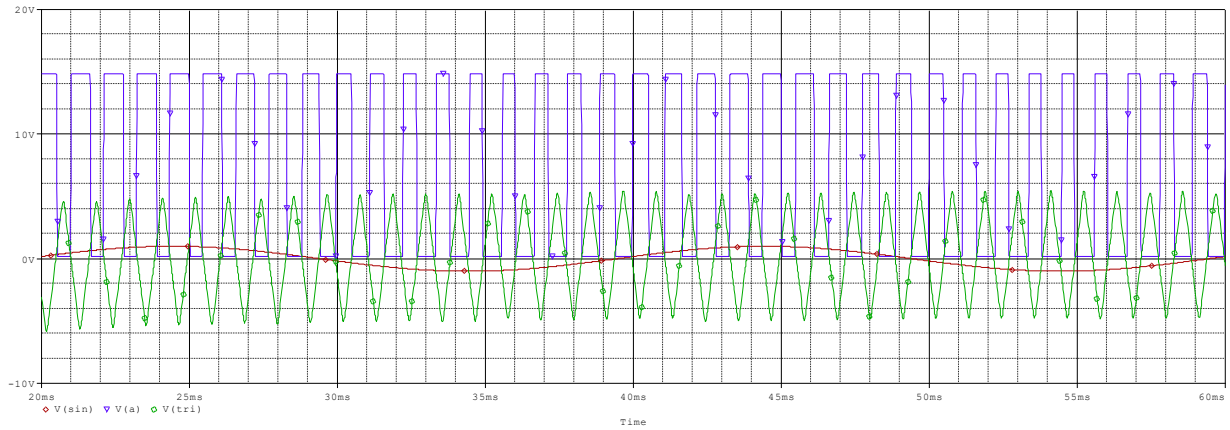

PWM- a_bar: Here, we give reference sinusoidal signal to the inverting terminal and the carrier triangular signal in non-inverting terminal. Whenever the reference signal is higher than the carrier, we'll get a low pulse otherwise a high pulse. Thus, a pulse width modulated signal is generated which is the inverted version of PWM-a. We named is as PWM-a_bar.

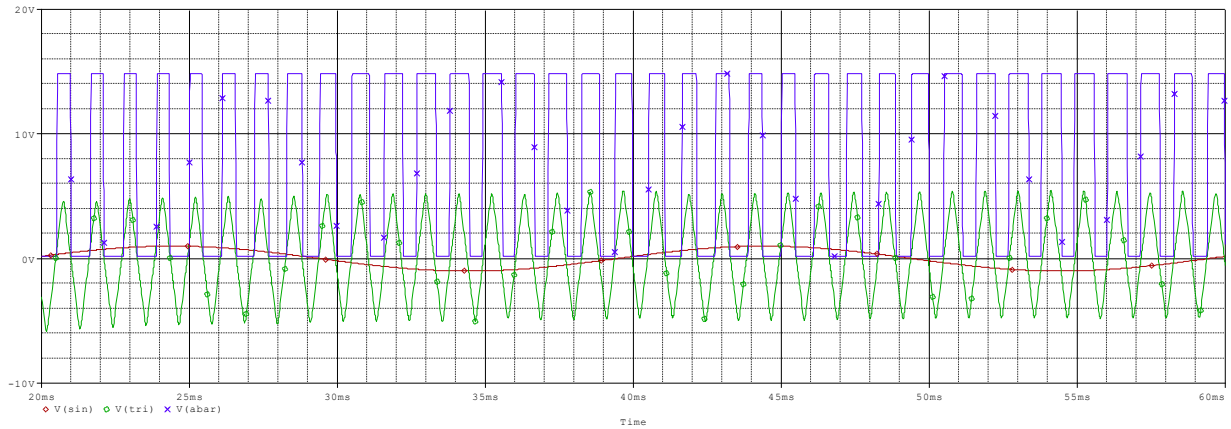

PWM-b: We have the same configuration as PWM-a. But here we used an inverted sinusoidal as reference signal. Thus the pulse width modulated signal looks like:

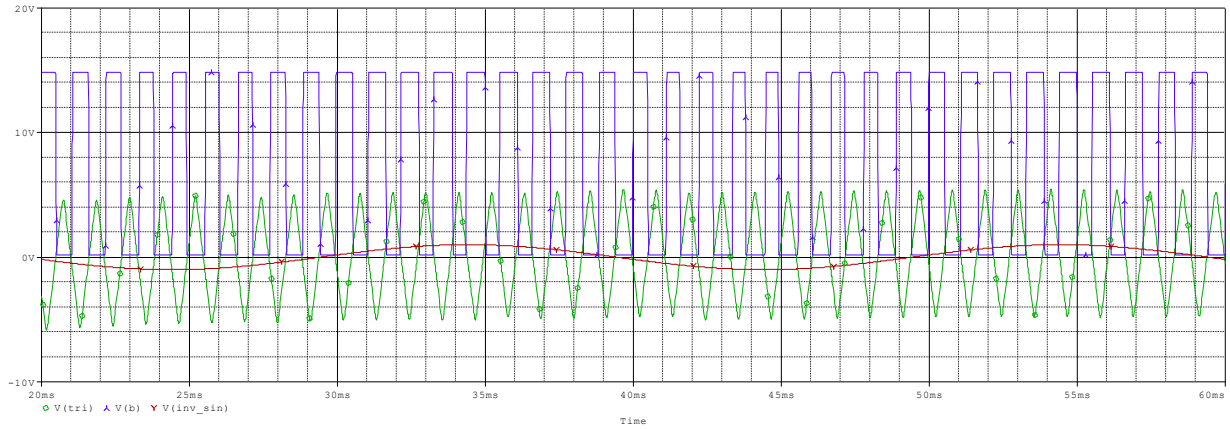

PWM-b_bar: We have the same configuration as PWM-a_bar and we used an inverted sinusoidal as reference signal. Thus the pulse width modulated signal looks like:

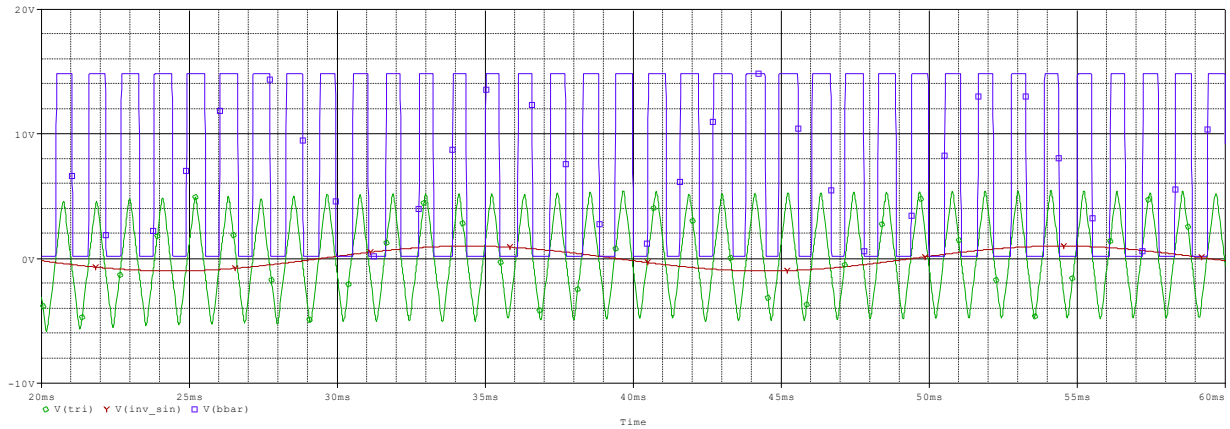

4.3 Full Bridge Inverter Circuit:

Schematic Diagram:

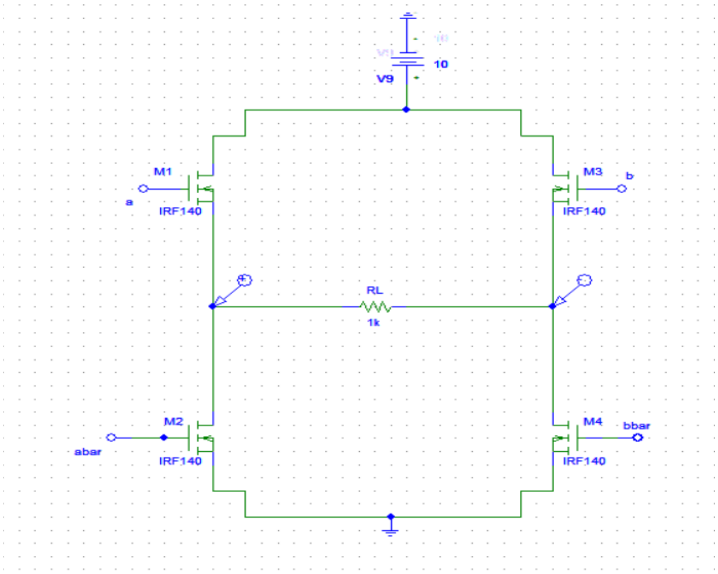

Output:

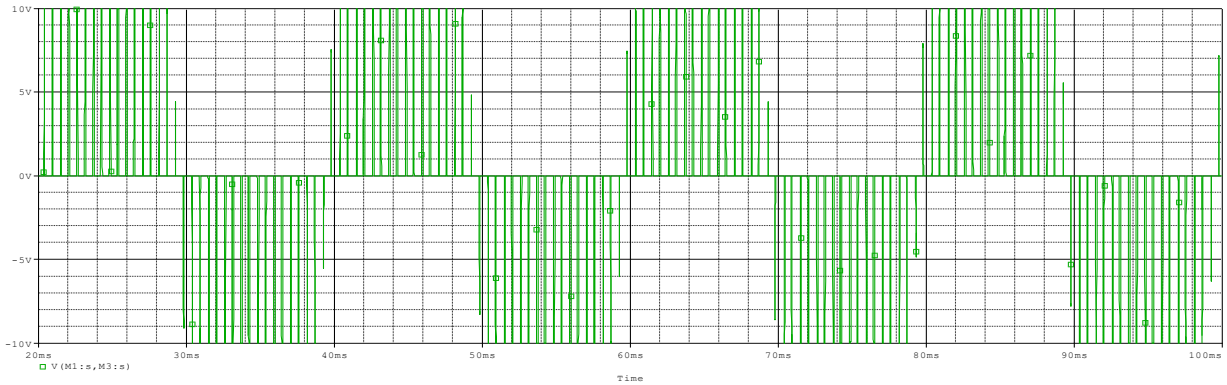

Zoom in look:

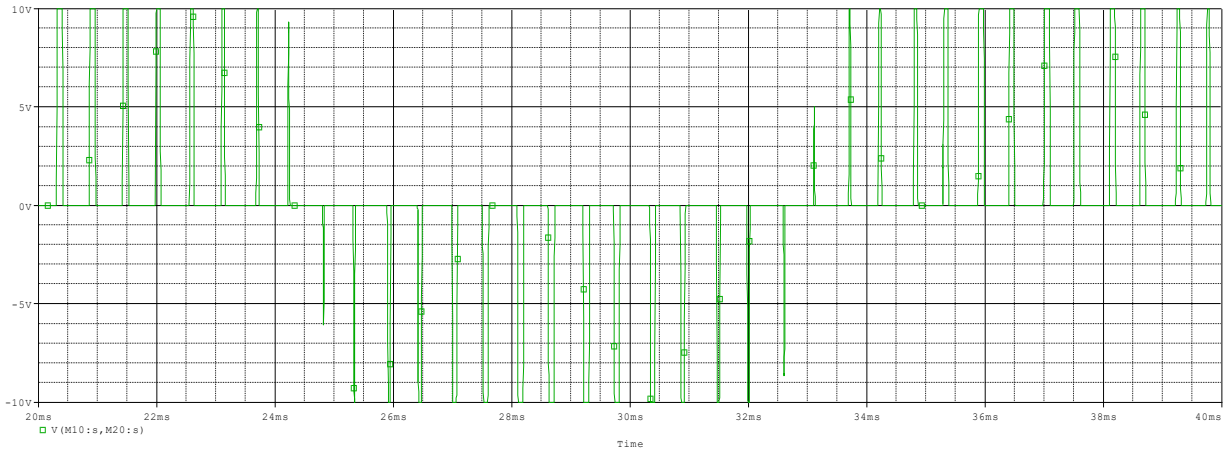

Explanation: Here we have used mosfet as switch. M1 and M2 are mutually exclusive.M3 and M4 are also mutually exclusive. 10V DC voltage is used as the DC source. We use resistor as load. When M1 and M4 are on current flows in one direction and when M2 and M3 are on current flows in opposite directions. Thus we have a pulse width modulated waveform in which sinusoidal behavior is present. If we look the zoom in waveform we see the width firstly increasing, then after it gradually decreasing. After a certain time, we have the 180 phase shifted signal of same behavior. So it is clearly observable that, this pwm signal possesses sinusoidal waveform of fundamental frequency along with harmonic frequencies. So, if we pass this signal through a low pass filter we can have the pure sinusoidal waveform.

4.4 Low Pass Filter Design:

Here we used a -60db/decade Low Pass Butterworth Filter.

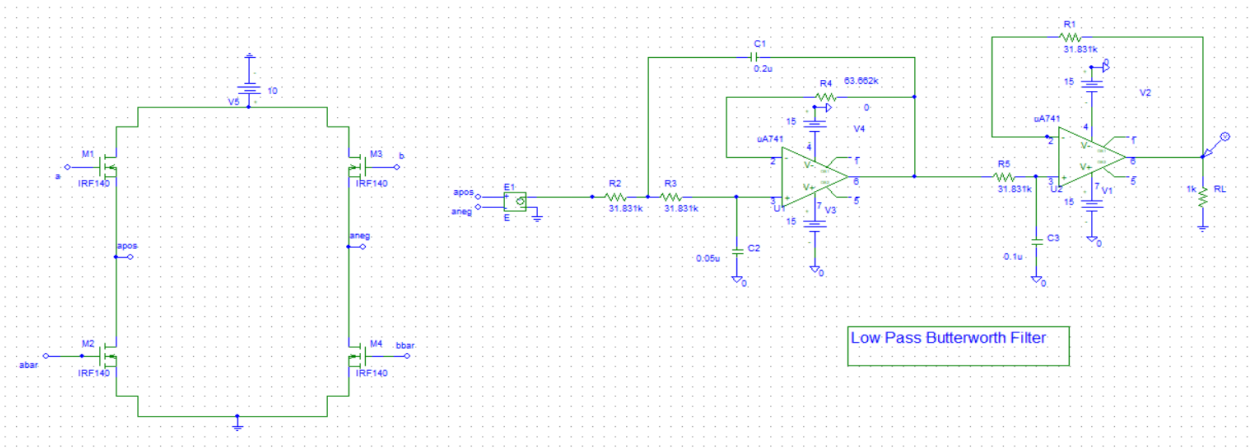

Output:

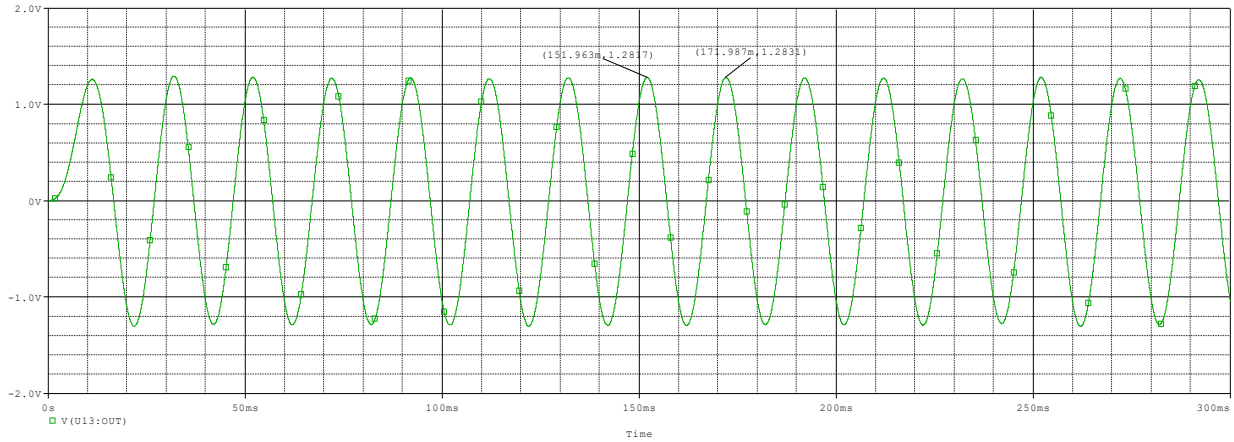

T= 171.987ms –151.963ms=20.024ms

f=1/T= 49.94Hz ≈50Hz

Necessary calculations:

f=50Hz

Let, C3= 0.1µF

C2=0.5*C3= 0.05 µF and C1=2*C3= 0.2 µF

R1=R2=R3=R5=R=$1/(2\pi fC)$ =$1/(2*\pi*50*.1*10^{-}6)$ = 31.831kΩ

R4=2R=63.662kΩ

5. Simulation Analysis

5.1 Final Schematic: (For 50Hz)

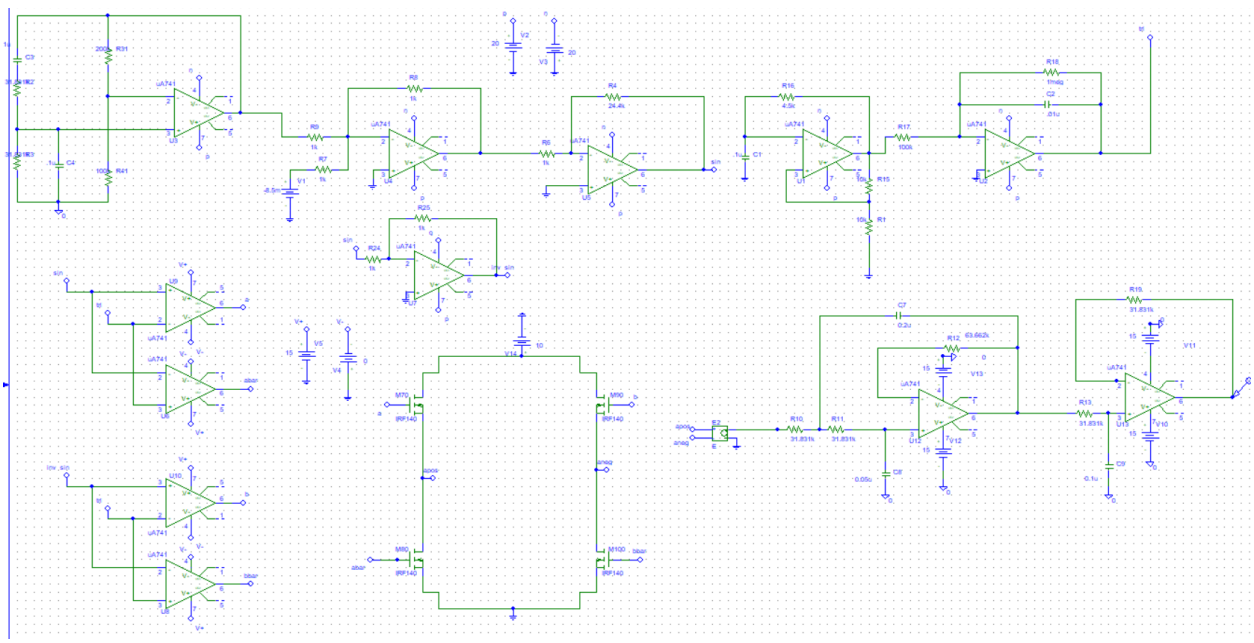

Output:

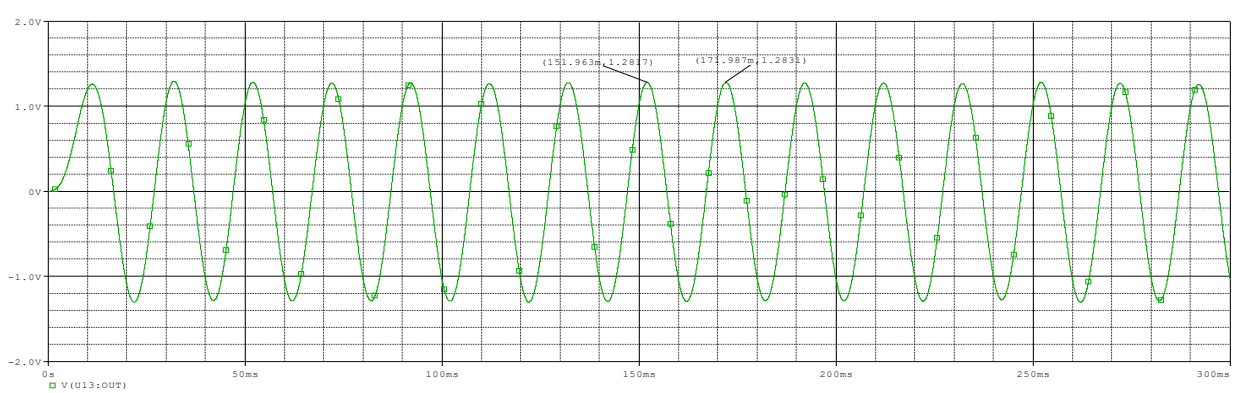

T= 171.987ms –151.963ms=20.024ms

f=1/T= 49.94Hz ≈50Hz

5.2 Final Schematic: (For 60Hz)

Here the reference signal's frequency is 60 Hz. So, we have to design the Wein Bridge for 60 Hz and the Low Pass Butterworth Filter for 60Hz.The values are calculated in the same way described in implementation section.

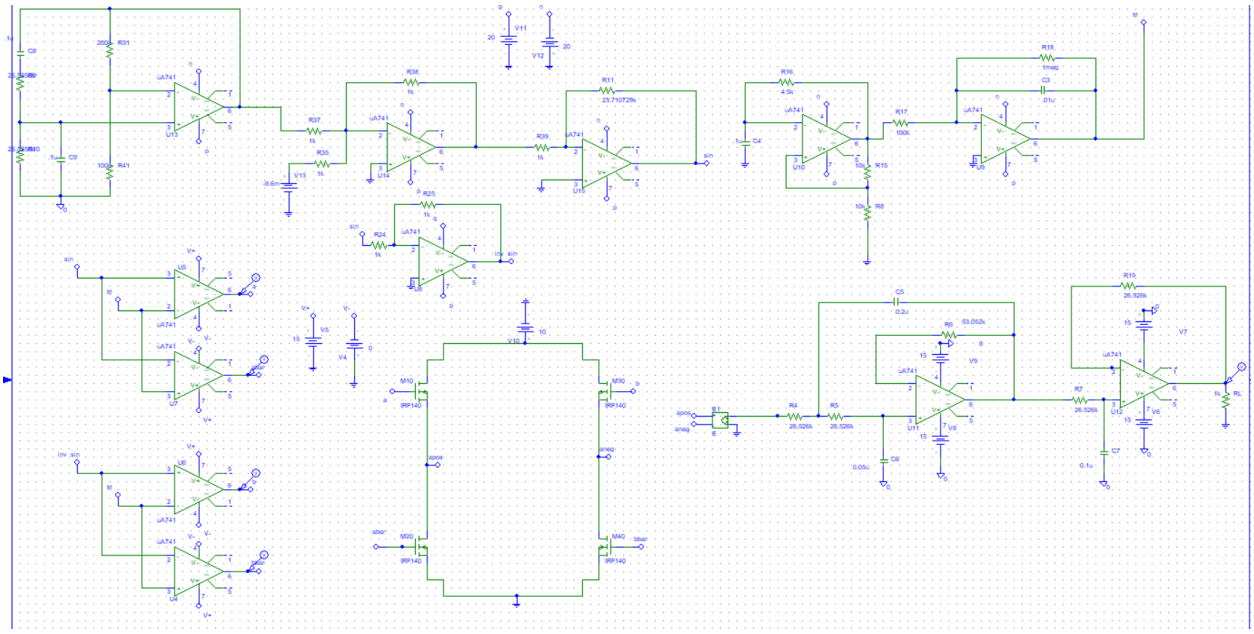

Output:

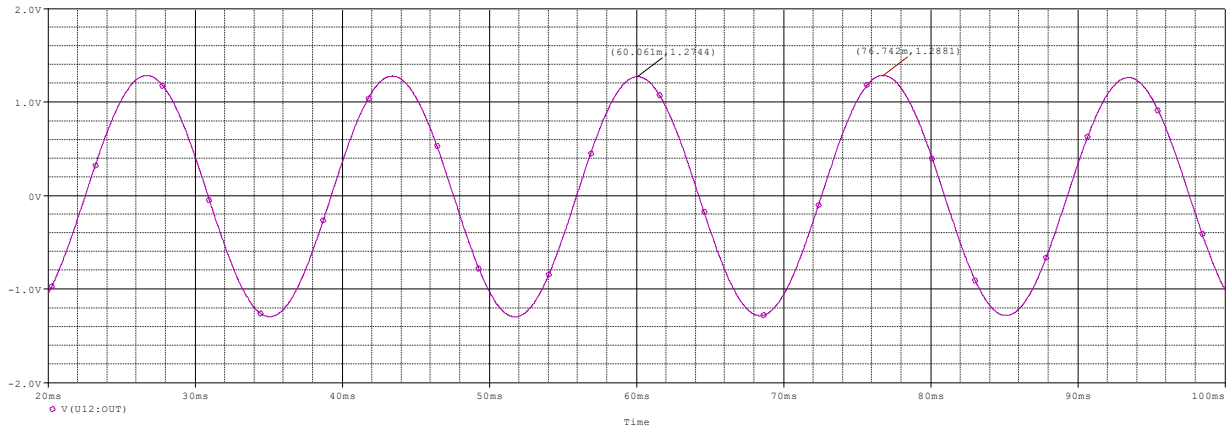

T= 76.742ms –60.061ms=16.681ms

f=1/T= 59.95Hz ≈60Hz

6. Application

There are some potential applications of our DC to AC inverter. As our inverter is made of op-amp, it is typically limited in terms of power handling and waveform quality.

Some key applications are:

a. Op-amp-based PWM inverters can be frequently used to instruct students on the fundamentals of inverter operation and PWM modulation in educational settings like laboratories and classrooms.
b. This inverter can be used to test and debug small AC-powered devices and circuits using low-power AC sources.
c. They can be used as signal generators to test and calibrate sensors or devices that require low-frequency AC signals and are AC-sensitive.
d. This kind of inverter can be utilized for simple emergency lighting systems, offering backup illumination for small-scale lighting solutions during power outages.
e. The inverter can be used by engineers and inventors for low-power AC applications during the early stages of prototyping and proof of concept.

7. Limitation

There are some limitations of our DC to AC inverter. Some key limitations are:

1. Op-amps are not intended to be used in high-power applications. Op-amp inverters are often restricted to low to moderate power outputs.

2. The operating frequency of op-amp-based PWM inverters is constrained. They may not be suited for high-frequency AC generation but are suitable for low to moderate frequency applications.

3.Using op-amps can be difficult for producing high voltage outputs, especially at high power levels.

4. Due to its inability to handle high voltage, it has a limited load capacity.

5.Inverters based on op-amps might produce greater heat. The control of heat can be a problem.

Op-amp-based PWM inverters have some drawbacks that make them less suited for high-power, high-frequency, or critical applications, although they can be beneficial for low to moderate power and frequency applications and for instructional purposes.

8. Conclusion

The project involved modelling a DC to AC converter in PSPICE software and implementing it using PWM switching. The goal was to create an AC waveform from a sinusoidal reference waveform and a higher-frequency triangular carrier waveform that resembled a desired sinusoid. The simulation produced an AC output by aligning the reference and carrier waveforms using PSPICE. The outcomes demonstrated successful creation of AC waveforms while also highlighting drawbacks including harmonic distortion and voltage regulation. Switching losses at high carrier frequencies reduced efficiency. The project's importance consists in demonstrating PWM-based DC to AC conversion concepts, comprehending constraints, and taking advanced performance improvement tactics into consideration.