Bangladesh University of Engineering and Technology
Department of Electrical and Electronic Engineering
Dhaka-1205, Bangladesh

Course No: EEE 310

Course Title: Communication Laboratory

Amplitude Modulation Transmitter & Receiver: Design & Implementation

Submitted to:

Dr. Md. Saifur Rahman

Professor, Department of EEE

Bangladesh University of Engineering & Technology

Redwanul Mahbub Talukder

Lecturer, Department of EEE

Bangladesh University of Engineering & Technology

BANGLADESH UNIVERSITY OF ENGINEERING AND TECHNOLOGY

DEPARTMENT OF ELECTRICAL AND ELECTRONIC ENGINEERING

EEE 310(January 2024)

Communication Laboratory

Final Project Report

Section: C2 Group: 04

Amplitude Modulation Transmitter & Receiver: Design & Implementation

---

Course Instructors:

Dr. Md. Saifur Rahman, Professor, EEE, BUET

Redwanul Mahbub Talukder, Lecturer, EEE, BUET

Signature of Instructor: _____

Academic Honesty Statement:

IMPORTANT! Please carefully read and sign the Academic Honesty Statement, below. <u>Type the student ID and name, and put your signature</u>. *You will not receive credit for this project experiment unless this statement is signed in the presence of your lab instructor.*

"In signing this statement, We hereby certify that the work on this project is our own and that we have not copied the work of any other students (past or present), and cited all relevant sources while completing this project. We understand that if we fail to honor this agreement, We will each receive a score of ZERO for this project and be subject to failure of this course."

Signature: _____ **Full Name: Md. Nagib Mahfuz** **Student ID: 2006166**	**Signature:** _____ **Full Name: Muntafa Mubarrat Mahi** **Student ID: 2006172**
Signature: _____ **Full Name: Mahmud Al Hadi Nafis** **Student ID: 2006178**	**Signature:** _____ **Full Name: Mushfikur Rahman Navin** **Student ID: 2006190**

Table of Contents

List of Figures iii

List of Tables iv

1 Abstract 1

2 Introduction 1

3 Design: 2

3.1 Problem Formulation (PO(b)) 2

3.1.1 Identification of Scope 2

3.1.2 Literature Review 2

3.1.3 Formulation of Problem 2

3.1.4 Analysis 2

3.2 Design Method (PO(a)) 4

3.2.1 Function Generator (Message Signal Source): 5

3.2.2 Carrier Generation: 5

3.2.3 Generation of Modulated Signal: 8

3.2.4 Modulator Circuit: 10

3.2.5 Demodulation Circuit: 12

3.2.6 Low Pass Filter Design 15

3.2.7 Amplifier Design 16

3.3 Circuit Diagram: 18

3.4 Hardware Implementation 18

4. Implementation: 18

4.1 Transmitter: 18

4.2 Receiver: 20

5 Design Analysis and Evaluation 21

5.1 Novelty: 21

5.2 Design Considerations (PO(c)) 21
5.2.1 Considerations to public health and safety 21
5.2.2 Considerations to environment 21
5.3 Investigations: 22
5.3.1 Design of Experiments: 22
5.3.2 Data Collection: 23
5.3.3 Results and Analysis: 24
5.3.4 Interpretation and Conclusion of Data: 27
5.4 Limitations of Tools (PO(e)) 27
5.5 Impact Assessment (PO(f)) 27
5.5.1 Assessment of Societal and Cultural Issues 27
5.5.2 Assessment of Legal Issues 28
5.6 Sustainability Evaluation (PO(g)) 28
6. Reflection on Individual and Team work (PO(i)) 29
6.1 Individual Contribution of Each Member 29
6.2 Mode of the Team Work: 29
6.3 Diversity Statement of Team: 31
6.4 Log Book of Project Implementation: 31
7. Communication to External Stakeholders (PO(j)) 33
7.1 Executive Summary 33
7.2 User Manual 33
8 Project Management and Cost Analysis (PO(k)) 34
8.1 Bill of Materials 34
9 Future Work (PO(l)) 36
10 References 38

List of Figures

Figure 1 AM signal transmitter....4
Figure 2 AM signal receiver....4
Figure 3Message signal(5V p-p, 1KHz)....5
Figure 4 Circuit Diagram of Colpitts Oscillator....5
Figure 5 Colpitts Oscillator Simulation....7
Figure 6 Simulation Output for Colpitts Oscillator....7
Figure 7 Amplitude modulation for different modulation index....9
Figure 8 Collector Current under saturation operation....10
Figure 9 Class C Power Amplifier....10
Figure 10 Simulation of Modulation Circuit (Multisim)....11
Figure 11 Simulation Output of Modulation Circuit....11
Figure 12 Effect of large RC values on the performance of the envelope detector....14
Figure 13 Effect of small RC values on the performance of the envelope detector....14
Figure 14 Envelop Detector....14
Figure 15 Output at the Diode Detector....15
Figure 16 Output of the Envelop Detector....15
Figure 17 Low Pass Filter....16
Figure 18 Simulation Output at low-pass filter....16
Figure 19 Amplifier and Low Frequency Blocking Circuit....16
Figure 20 Message Signal (Yellow) and Reconstructed Signal (Cyan)....17
Figure 21 Simulation Circuit of Transmitter & Receiver....18
Figure 22 Hardware implementation of the Simulated Circuit....18
Figure 23 Transmitter....19
Figure 24 Receiver....20
Figure 25 Modulation Experimental Setup....22
Figure 26 Demodulation Setup....22
Figure 27 Oscillator Frequency Measurement....23
Figure 28 Modulation Setup For single Tone....23
Figure 29 Demodulation Data Collection....24
Figure 30 Message Signal (Cyan) and Reconstructed Signal (Yellow) (1 kHz)....24
Figure 31 Colpitts Oscillator Output....24
Figure 32 Modulation for single tone....25
Figure 33 Modulation for Square Wave Signal....25

Figure 34 Modulation for Triangular Signal 26
Figure 35 Demodulation Output at the diode Detector 26
Figure 36 Message Signal and Reconstructed Signal (2 kHz) 27
Figure 37 Billing Receipt of Store 35

List of Tables

Table 1 Components for Transmitter 19
Table 2 Components for Receiver Circuit 20
Table 3 Colpitts Oscillator Measurement Data 25
Table 4 Amplitude Demodulation Data 26
Table 5 Individual Contributions 29
Table 6 Log Book of Project Implementation 31
Table 7 Component Amount and Price 34
Table 8 Outcome of the Project 37

1 Abstract

This project aims to create a basic system for sending and receiving AM (amplitude-modulated) signals, which are commonly used in radio broadcasting. We'll build a transmitter that combines audio signals with a carrier wave and a receiver to extract and amplify these signals. If we send a low-frequency message signal over long distances, it will lose power and become attenuated. So it becomes very hard to reconstruct the signal at the receiver end. Moreover, the length of the transmission antenna depends on the wavelength of the signal. Small frequency signals require a larger antenna for transmission which is not efficient. So, by modulating the message signal with a high-frequency sinusoidal signal, we can send it to long distances with lesser distortion and with more efficiency.

2 Introduction

Our project mainly focuses on designing and implementing a circuit that can perform Amplitude Modulation (AM) and demodulation. It delves into the realm of AM signal transmission and reception, aiming to construct a simple yet effective system for transmitting signals. We want to learn the basic principles of AM modulation and demodulation using sine, triangular, and rectangular waves as message signals. We have used a hands-on approach to construct the circuit using components like oscillators, amplifiers, and tuned circuits. We'll focus on understanding key concepts like modulation, frequency selection, and signal amplification through hands-on experimentation. By the end, we'll have a simple yet functional system for transmitting and receiving AM signals, providing a solid foundation in analog communication principles.

3 Design:

3.1 Problem Formulation (PO(b))

3.1.1 Identification of Scope

The scope of our project is:

- AM transmitter which is capable of modulating input signals onto a carrier wave.
- AM receiver which is capable of demodulating the modulated signal and reconstructing the original signal by using envelope detection.
- It can handle various input signals like sin waves, triangular waves, or rectangular signals.
- Justify component choices based on cost, availability, and performance.
- Provide clear circuit diagrams and explanations for reproducibility.
- Include safety measures for construction and operation.

3.1.2 Literature Review

The literature review of this project consists of the research papers, articles, and textbooks that were consulted regarding amplitude modulation techniques and their applications. Previous studies have explored various aspects of AM transmitter and receiver projects, focusing on modulation techniques, circuit design, component selection, testing procedures, safety considerations, and educational objectives. These studies have provided insights into the design, implementation, and performance evaluation of AM systems, highlighting signal quality, circuit topologies, component characteristics, testing methodologies, safety measures, and educational benefits. This literature review forms the basis for our project, guiding our approach and contributing to our understanding of AM transmission and reception.

3.1.3 Formulation of Problem

Our project aims to address some challenges:

- Ensuring the AM signals have enough power for long-distance transmission and reception.
- Effectively encoding the audio signal onto the carrier frequency without distortion.
- Choosing the right components for reliable performance and cost-effectiveness.
- Designing circuits that meet specific requirements like frequency range and power output.
- Developing tests to ensure the system performs well in terms of signal strength and quality.

3.1.4 Analysis

For solving the formulated problems, several key aspects are taken into account to ensure the

successful design and implementation of the AM modulation and demodulation circuit:

- We first analyzed the frequency range of input signal to select an appropriate carrier frequency for modulation, ensuring compatibility with the bandwidth requirements of the transmission medium.
- Effective modulation is essential for accurately encoding the audio signal onto the carrier frequency. Analysis should evaluate the modulation index and distortion levels to ensure high-fidelity transmission and reception of audio signals.
- The selection of components significantly impacts the performance and cost-effectiveness of the system. Analysis should compare various components based on factors such as frequency range, power handling capacity, and cost to identify the most suitable options.
- The design of the transmitter and receiver circuits plays a critical role in achieving the desired performance metrics. Analysis should assess circuit efficiency, stability, and ease of assembly to optimize the design for reliable operation.
- We analyzed various envelope detection methods to identify the most suitable one for demodulation. We used comparing methods such as diode detection, synchronous detection, and square law detection for simple, accurate, and feasible hardware implementation.

3.2 Design Method (PO(a))

To send data over long distances, the signal needs to be strong enough. However, voice signals, which typically have frequencies below 3400Hz, don't have enough power to travel long distances effectively. Amplitude Modulation (AM) is a method where the strength of a high-frequency sine wave, usually in radio frequencies, changes in line with another signal called the modulating signal. This modulating signal, often carrying audio data like in AM radio, is mixed with the high-frequency sine wave, known as the carrier wave. This process is done by using a Colpitts oscillator for generating carrier signals. Then the signal is transmitted. Upon receiving the transmitted signal, a diode detector is used to detect the signal. Then it goes through a low pass filter followed by two amplifiers and another low pass filter.

A simple diagram of AM signal transmitter:

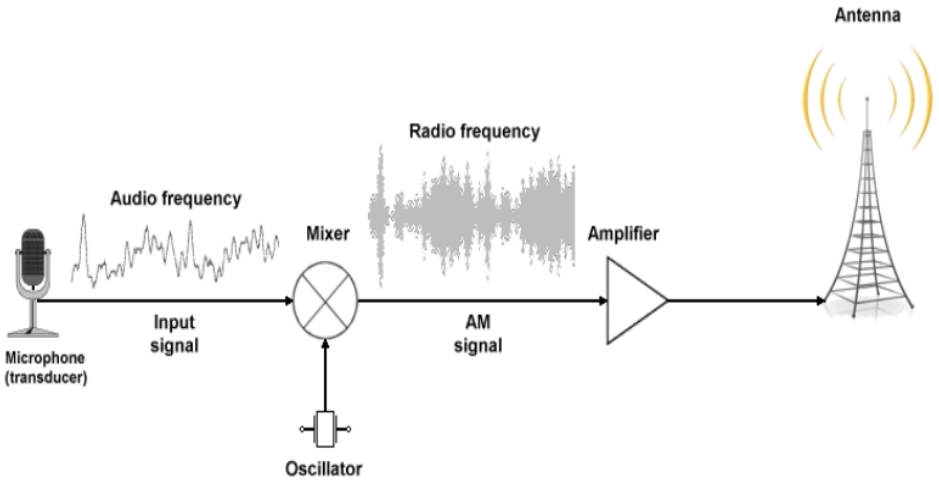

Figure 1 AM signal transmitter

Block diagram of the receiver:

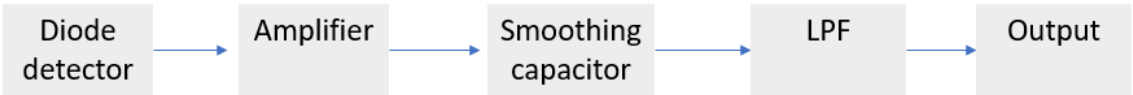

Figure 2 AM signal receiver

3.2.1 Function Generator (Message Signal Source):

For our project's input, we used a simple single-frequency sine wave as the message signal. This signal will have a constant amplitude that we'll use for modulation.

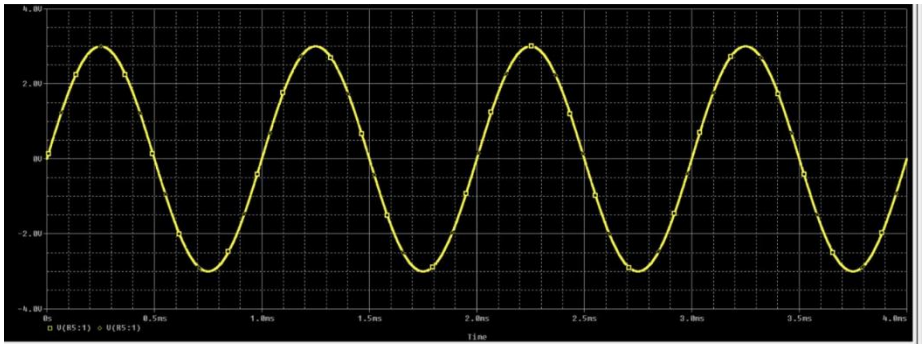

Figure 3Message signal(5V p-p, 1KHz)

3.2.2 Carrier Generation:

Colpitts Oscillator: A Colpitts oscillator is an electronic circuit that generates a sinusoidal waveform, typically in the radio frequency range.

Circuit Diagram:

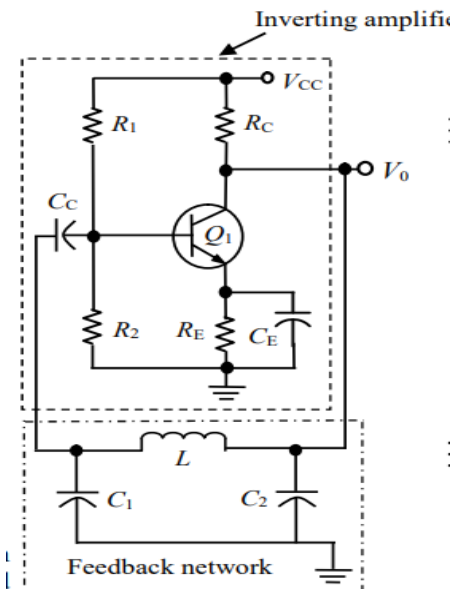

Figure 4 Circuit Diagram of Colpitts Oscillator

Working Principle:

A Colpitts oscillator uses an inductor and two capacitors in parallel to form a resonant tank circuit, which determines the oscillation frequency. The output signal from the tank circuit is fed back into the input of an amplifier, where it is amplified and fed back into the tank circuit. The feedback signal provides the necessary phase shift for sustained oscillation.

The working principle of a Colpitts oscillator can be explained as follows:

- When the power supply is switched on, the capacitors C1 and C2 start charging through the resistor R1 and R2. The voltage across C2 is coupled to the base of the transistor through the capacitor Cin.

- The transistor amplifies the input signal and produces an inverted output signal at the collector. The output signal is coupled to the tank circuit through the capacitor Cout.

- The tank circuit resonates at its natural frequency, which is given by:

$$f = \frac{1}{2\pi\sqrt{LC_t}}$$

Where:

- f = frequency of oscillation

- L = inductance of the inductor

- Ct = total capacitance of the series combination of C_1 and C_2, given by:

$$C_t = \frac{C_1 C_2}{C_1 + C_2}$$

- The resonant frequency is independent of the values of C_1 and C_2, but depends on their ratio. The ratio of C_1 and C_2 also affects the feedback gain and the stability of the oscillator.

- The voltage across the inductor L is in phase with the voltage across C_2, and 180 degrees out of phase with the voltage across C_1. Therefore, the voltage at the junction of C_1 and C_2 is 180 degrees out of phase with the voltage at the collector of the transistor. This voltage is fed back to the base of the transistor through Cin, providing another 180 degrees phase shift. Thus, the total phase shift around the loop is 360 degrees, which is equivalent to zero degrees. This satisfies the Barkhauβen criterion for oscillation.

- The amplitude of the oscillation depends on the feedback gain and the losses in the tank circuit. The feedback gain should be equal to or slightly greater than the losses for sustained oscillation. The feedback gain can be adjusted by varying the values of R_1 and R_2, or by using a variable capacitor in place of C_1 or C_2.

Advantages of Colpitts Oscillator:

- Colpitts oscillator circuitry is simple.
- The frequency of the oscillation in the Colpitts oscillator can be variable; the values of components in the circuit often determine it. Provide constant output amplitude.
- It typically consists of just a few components, including resistors, capacitors, and a Transistor or operational amplifier.
- Colpitts oscillators provide good frequency stability, making them suitable for applications with a stable frequency source.

Simulation Circuit Diagram:

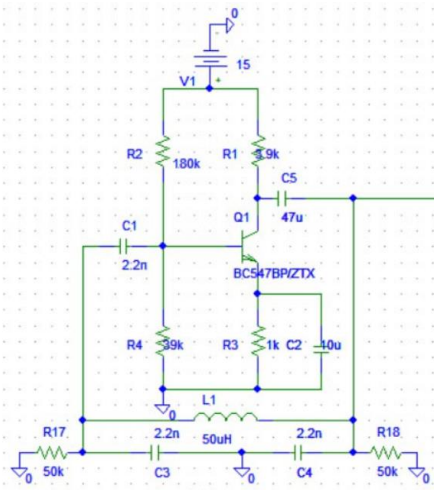

Figure 5 Colpitts Oscillator Simulation

The resonant frequency is, $f = \frac{1}{2\pi\sqrt{LC}}$. In the present analysis, L = L_1 =50µH and C_1 = C_2 = 2.2nF. Insertion in the resonant formula yields, $f = 678.64\ kHz \approx 680\ kHz$.

Simulation Output:

From the simulation, Colpitts oscillator has a frequency $\frac{1}{1.5\mu s} = 666.67\ kHz$.

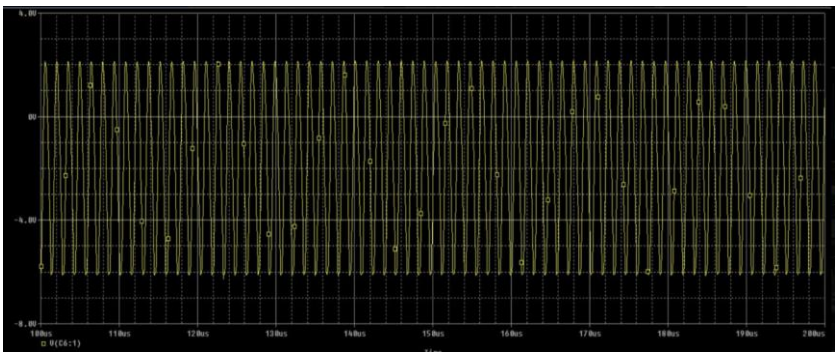

Figure 6 Simulation Output for Colpitts Oscillator

3.2.3 Generation of Modulated Signal:

Let the message signal be denoted as,

$$m(t) = A_m \cos(2\pi f_m t)$$

The carrier signal be denoted as,

$$c(t) = A_c \cos(2\pi f_c t)$$

Where A_m and A_c are the amplitude of the modulating signal and the carrier signal respectively. F_m and f_c are the frequency of the modulating signal and the carrier signal respectively. Then, the equation of the Amplitude Modulated wave will be,

$$s(t) = [A_c + A_m \cos(2\pi f_m t)] \cos(2\pi f_c t) \text{ .....(1)}$$

Modulation Index:

The modulation index is a measure of how much a carrier signal is altered by a modulating signal. It quantifies the degree of modulation applied to the carrier signal. In Amplitude modulation, it is defined as the ratio of the amplitude of the modulating signal to that of the carrier signal. The amplitude-modulated signal is,

$$s(t) = [A_c + A_m \cos(2\pi f_m t)] \cos(2\pi f_c t)$$

by re-arranging the signal,

$$s(t) = A_c[1+(\frac{Am}{Ac})\cos(2\pi f_m t)] \cos(2\pi f_c t)$$

$$\Rightarrow s(t) = A_c[1+ \mu \cos(2\pi f_m t)] \cos(2\pi f_c t) \text{.....(2)}$$

Where μ is the modulation index, and it can be write as,

$$\mu=\frac{Am}{Ac} \text{ .....(3)}$$

we know the amplitude of the message signal and carrier signal. So by using this equation we can easily calculate the modulation index.

Using equation (1) we can derive another formula to calculate modulation index when the maximum and minimum values of the modulating signal is given.

Let A_{max} and A_{min} be the maximum and minimum amplitudes of the modulated wave. We will get the maximum amplitude of the modulated wave when $\cos(2\pi f_m t)$ is 1.

$$\Rightarrow A_{max} = A_c + A_m \text{ .....(4)}$$

We will get the minimum amplitude of the modulated wave when $\cos(2\pi f_m t)$ is -1.

$$\Rightarrow A_{min} = A_c - A_m \text{ .....(5)}$$

Add Equation 4 and Equation 5.

$$A_{max} + A_{min} = A_c + A_m + A_c - A_m = 2A_c$$

$$A_c = \frac{Amax + Amin}{2}$$

Subtract Equation 5 from Equation 4.

$$A_{max} - A_{min} = A_c + A_m - (A_c - A_m) = 2A_m$$

$$A_m = \frac{Amax - Amin}{2}$$

The ratio of Equation 7 and Equation 6 will be as follows.

$$\frac{Am}{Ac} = \frac{\frac{Amax - Amin}{2}}{\frac{Amax + Amin}{2}}$$

$$\Rightarrow \mu = \frac{Amax - Amin}{Amax + Amin} \quad \ldots\ldots\ldots\ldots\ldots\ldots\ldots\ldots\ldots(6)$$

Therefore, we can calculate the modulation index using equation (3) and (6). The modulation index is often expressed as the percent of the depth of modulation. i.e. how much percent of modulated wave amplitude is of modulating wave.

For the accurate recovery of the modulated signal, the modulation index should be less than or equal to 1. Where 1 is the boundary condition. If μ>1 then we will get interference between two modulated signal and the original message cannot be retrieved.

Amplitude modulation for different modulation index is given bellow:

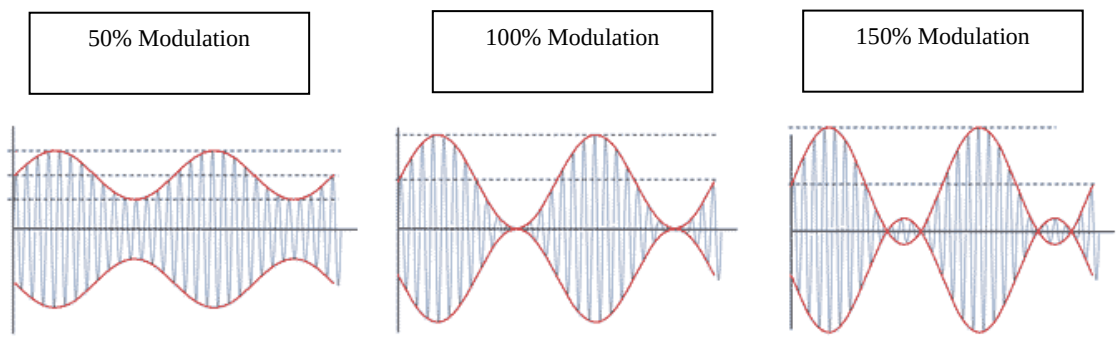

Figure 7 Amplitude modulation for different modulation index

In the figure, we can see three cases of modulation.

For our AM radio transmitter's modulation part, we've opted for a single Bipolar Junction Transistor (BJT) because it's easy to use. Modulation is important because it converts the audio input into the carrier frequency's amplitude.

We'll observe the modulated signal either at the collector or emitter. To set up this modulator, we'll use a single BJT in a common collector setup. This setup lets us adjust a resistor at the emitter, giving us precise control over the current at the collector. And this simple method ensures that the audio gets effectively modulated onto the carrier frequency.

3.2.4 Modulator Circuit:

For the modulation purpose, class C power amplifier has been used due to its high efficiency. BC547BP BJT was used as amplifier which were driven into saturation. Under saturation, the BJT output voltage is proportional to the biasing voltage.

$$V_0 = \frac{V_{dc} - R_{ON} I\,(\cos\theta_s - \cos\theta_c))}{\cos\theta_s}$$

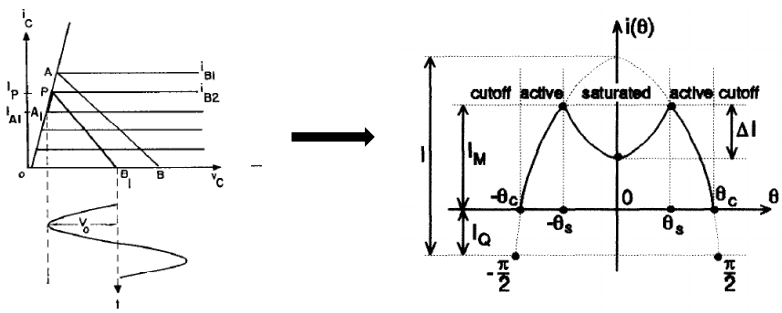

Figure 8 Collector Current under saturation operation

$$i(\theta) = \begin{cases} \dfrac{I_M(\cos\theta - \cos\theta_c)}{\cos\theta_s - \cos\theta_c} = I(\cos\theta - \cos\theta_c) \ \text{transistor active} \\ \dfrac{V_{dc} - V_0\cos\theta}{R_{ON}} \ \text{transistor saturated} \\ 0 \ \text{transistor cut off} \end{cases}$$

Where the resistance of the BJT is fairly low (milli-ohm range) even in the saturation region resulting in $V_0 \propto V_{dc}$. Therefore, the message signal is given in series with the biasing voltage.

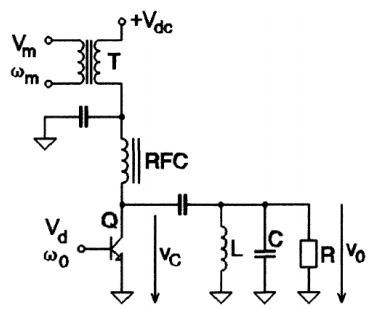

Figure 9 Class C Power Amplifier

However, with the same equivalent AC circuit we have formed the following circuit for modulation purpose:

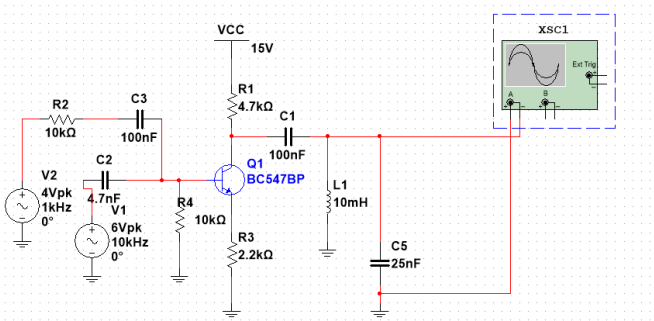

Figure 10 Simulation of Modulation Circuit (Multisim)

Where for the purpose of simulation, carrier frequency is 10khz, and the message is single tone of 1kHz with modulation index 0.67. The simulation output of the circuit is:

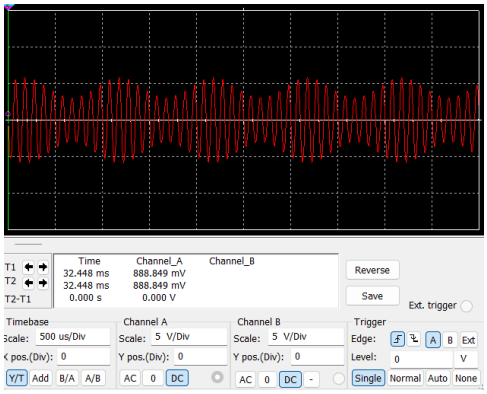

Figure 11 Simulation Output of Modulation Circuit

From the simulation output, it is established that the modulated signal is in well accordance with the theory.

3.2.5 Demodulation Circuit:

Diode Detector (Envelope Detector);

An envelope detector is a simple and very efficient device which is very efficient device which is suitable for the detection of a narrowband AM signal. A narrowband AM wave is the one in which the carrier frequency fc is much higher as compared to the bandwidth of modulating signal.

Circuit Diagram:

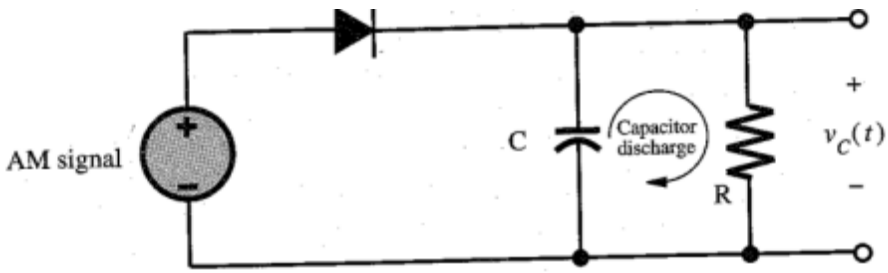

The envelope detector consists of a diode and RC filter.

Working Operation:

The standard AM wave is applied at the input of demodulator. In every positive half cycle of the input the demodulator diode is forward biased and charges the filter capacitor C connected across the load resistance R to almost the people of input voltage.

As soon as the capacitor charges to peak value, the diode stops conducting.

The capacitor will now discharge through R between the positive pics as shown in figure 4. The discharging process continues until the next positive half cycle. When the input signal becomes greater than the capacitor voltage, the diode conducts again and the process repeats itself.

Waveforms:

The input-output waveforms for the envelope demodulator is shown below:

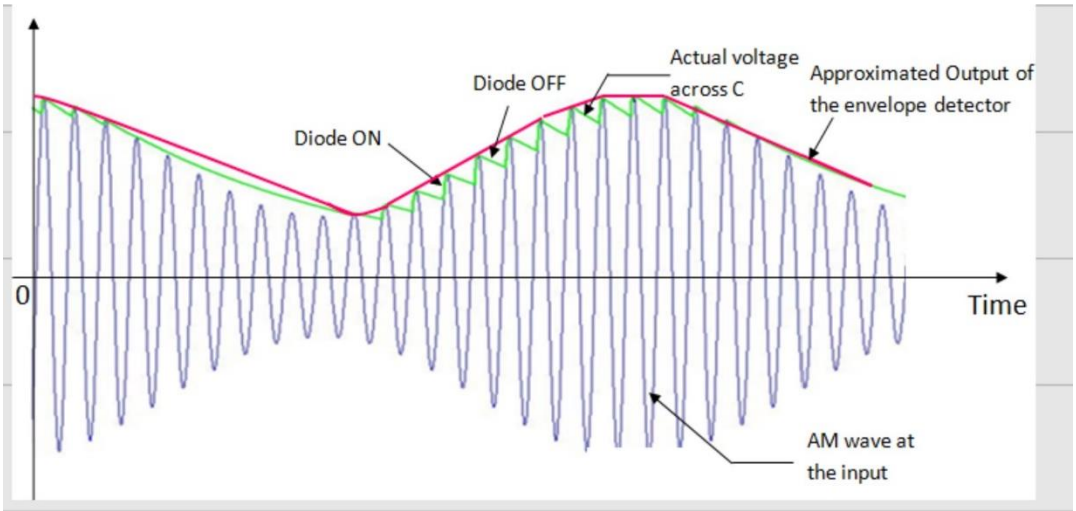

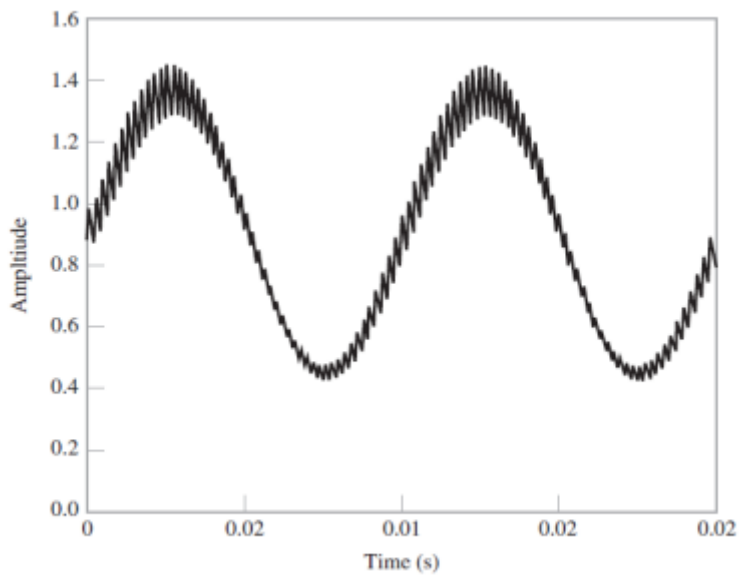

It can be observed from these waveforms that the envelope of the AM wave is being recovered successfully.

Selection of the RC time constants:

The time constant RC must be selected to follow the variation in the envelope of the modulated signal:

- If RC is too large then discharge of the capacitor is to slow and again output will not follow the envelope.

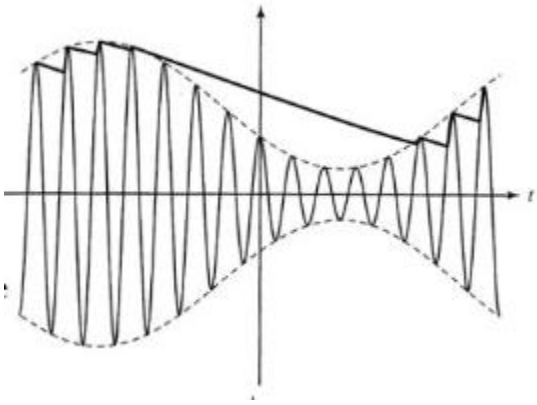

Figure 12 Effect of large RC values on the performance of the envelope detector.

- If RC is too small then output of the filter false very rapidly after each pic and will not follow the envelope closely.

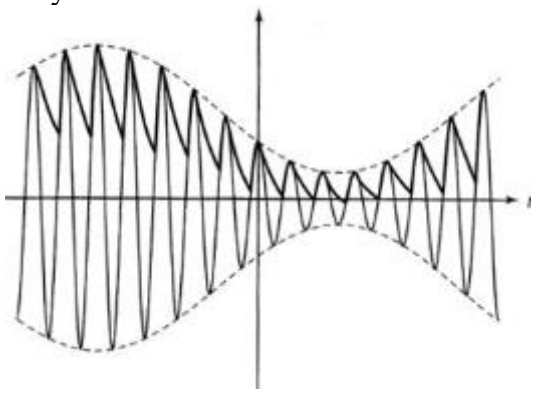

Figure 13 Effect of small RC values on the performance of the envelope detector.

for proper performance of the envelope detector, the discharge time constant RC must be chosen in**:** $\frac{\mathbf{1}}{\boldsymbol{\omega_c}} \ll RC < \frac{1}{2\pi B}$

Simulation Circuit Diagram:

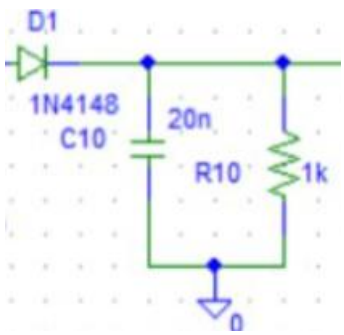

Figure 14 Envelop Detector

Simulation Output:

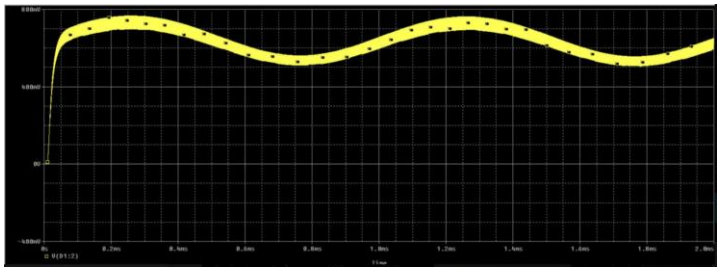

Figure 15 Output at the Diode Detector

3.2.6 Low Pass Filter Design

The output of the diode envelop detector usually involves ripples due to the charge-discharge of the capacitors. The diode detector is designed such that these ripples occur at higher frequency than the message signal. Therefore, a low pass filter has to be used to obtain the spectrum of the message signal.

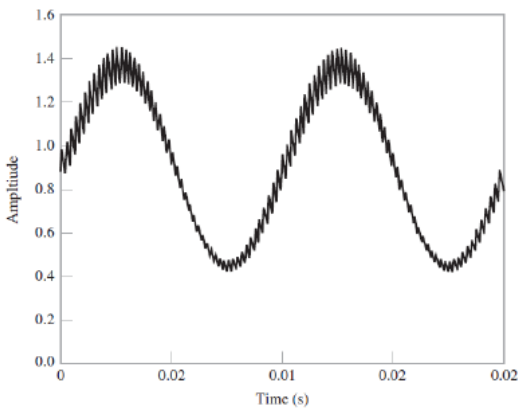

Figure 16 Output of the Envelop Detector

The cutoff frequency of the low-pass filter must be higher than the maximum of message but lower than that of ripple frequency. Mathematically, $f_{max(m(t))} < f_c < f_{\min(\text{ripple})}$

Since, the fulfillment of the right-side inequality involves non-linear manipulation and maximum frequency of the message may change in wide ranges, adjustments to the cutoff frequency of the filter should be available (*tuning*). In addition, the cost as well as loading of the filter must be taken in consideration. Taking all these into considerations, -20dB RC low-pass filter was designed with a variable resistance (0 to 100k) and a capacitor 0.1µF which provides a cutoff at as low as $f_{c(\min)} = \frac{1}{2\pi R_{max} C} \approx 16Hz$.

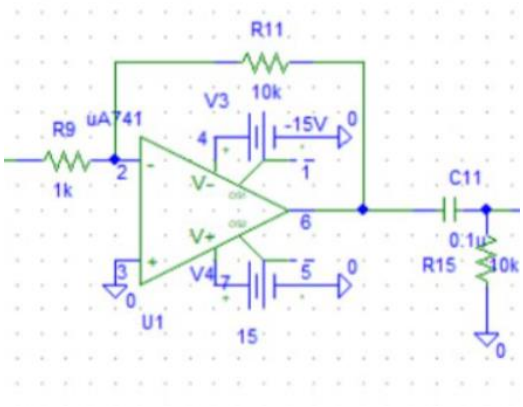

Figure 17 Low Pass Filter

The resistor (pot) has to be varied until a distortion free output is found and to reduce the loading of the filter another Op-Amp uA741 is used with a bias of 15 Volt.

Simulation Output:

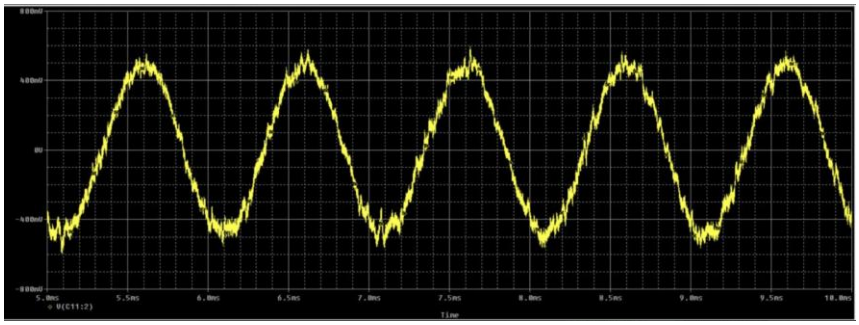

Figure 18 Simulation Output at low-pass filter

3.2.7 Amplifier Design

In modulations, only the shape of the message signal is actually important and the output is amplified as necessary on the receiver side. In the present analysis, an inverting amplifier using Op-Amp uA741 was designed with circuit schematics as follows:

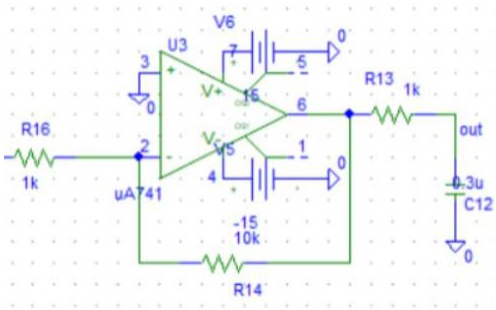

Figure 19 Amplifier and Low Frequency Blocking Circuit

Amplification of about 10 was desired for the present design i.e., the closed loop gain of the circuit is, $A_f = -\frac{R_f}{R_i} = -10$. Moreover, the resistors are usually chosen in the kilo-ohm ranges. Consequently, $R_f = 10k\Omega, R_i = 1k\Omega$ with a bias of 15 volts were chosen which were

the only design parameter in the amplification process.

Low Frequency Blocking Circuit:

After filtering and amplification another high pass filter is used which actually blocks DC voltages and other low frequency noises. For this purpose, a capacitor 0.3µF and a resistor of 1kΩ is used which provides a cutoff frequency at $f_c = \frac{1}{2\pi RC} \approx 500Hz$.

Final Output:

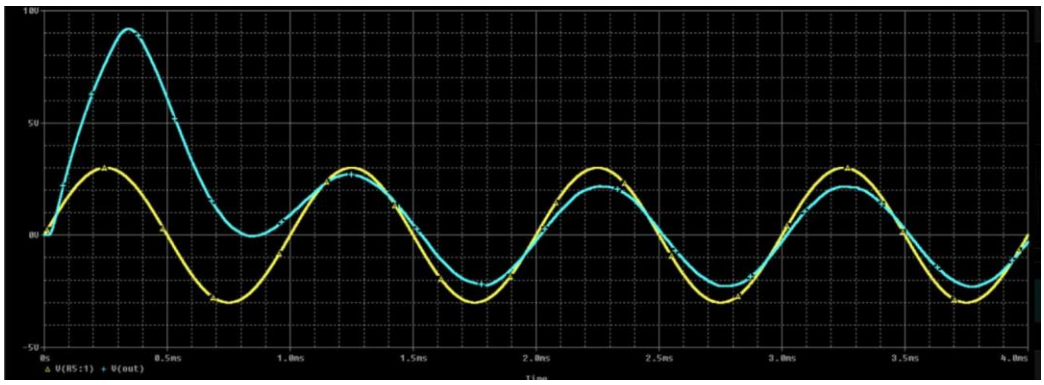

Figure 20 Message Signal (Yellow) and Reconstructed Signal (Cyan)

3.3 Circuit Diagram:

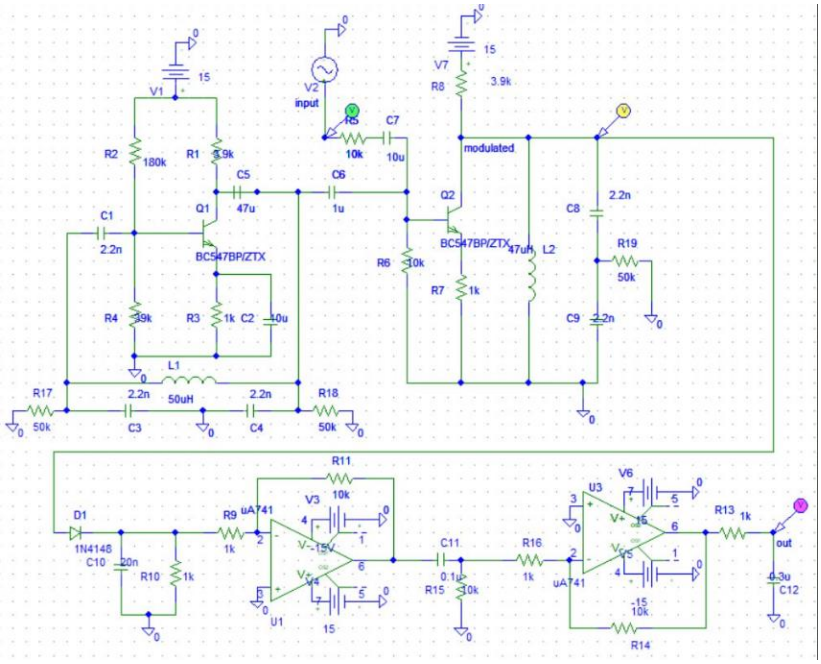

Figure 21 Simulation Circuit of Transmitter & Receiver

3.4 Hardware Implementation

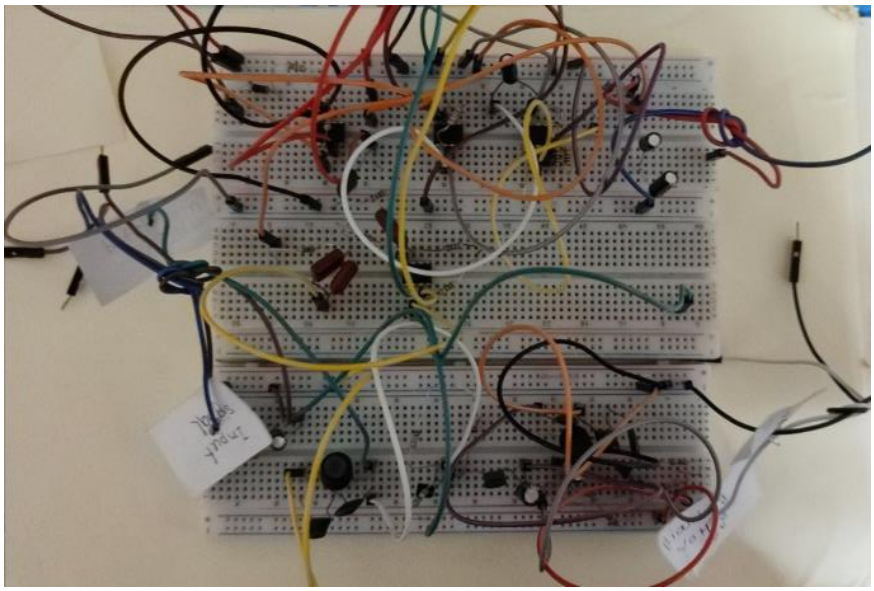

Figure 22 Hardware implementation of the Simulated Circuit

4. Implementation:

4.1 Transmitter:

The transmitter portion of the circuit consisted of oscillator and modulator. Both of these

circuits were completed in the same breadboard.

Components:

Table 1 Components for Transmitter

Part	Component	Value
Oscillator	Resistor (R)	1kΩ, 3.9kΩ, 39kΩ,180kΩ,
	Inductor (L)	50µH
	Capacitor (C)	2.2nF×3, 10µF, 47µF
	Transistor (BJT)	BC 547BP
Modulator	Resistor (R)	1kΩ, 10kΩ×2, 3.9kΩ
	Inductor (L)	50µF
	Capacitor (C)	2.2nF×2, 10µF, 1µF
	Transistor (BJT)	BC547BP

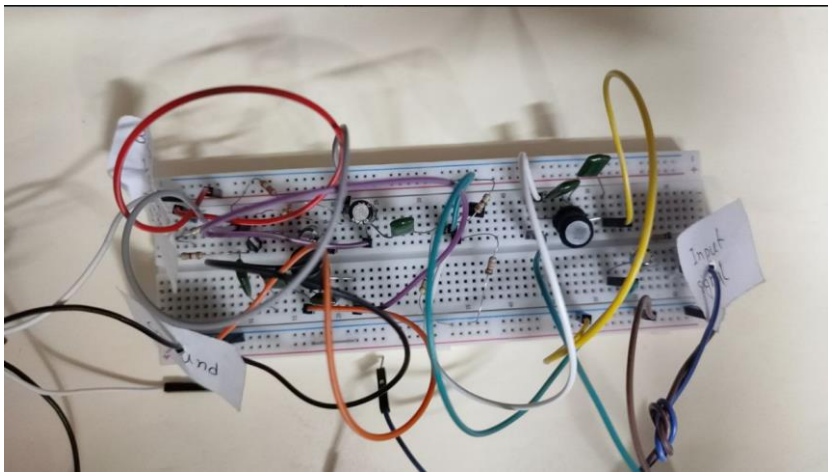

Figure 23 Transmitter

4.2 Receiver:

The receiver side consisted of Envelop detector using diode which is followed by a low-pass filter and then amplified and DC & low frequency components were suppressed.

Table 2 Components for Receiver Circuit

Part	Component	Value
Envelop Detector	Resistor (R)	1kΩ
	Capacitor (C)	20nF
	Diode (D)	1N4148
Filter	Resistor (R)	1kΩ,10kΩ, 100kΩ(pot)
	Capacitor (C)	0.1µF
	Op-Amp	uA741
Amplifier	Resistor (R)	1kΩ×2, 10kΩ
	Capacitor (C)	0.3µF
	Op-Amp	uA741

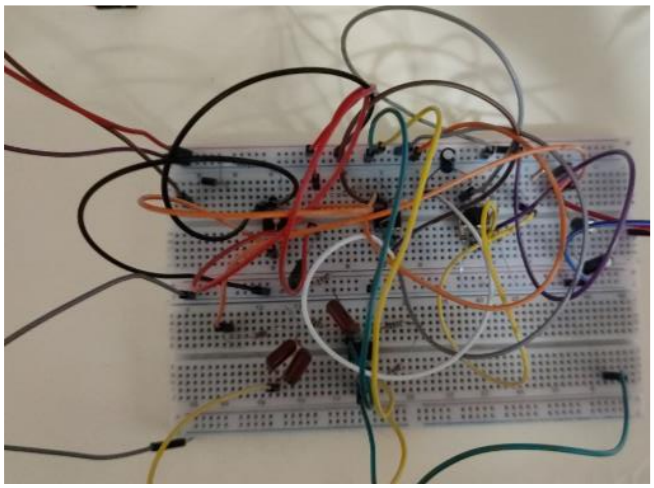

Figure 24 Receiver

In addition to these three DC biasing voltage sources and one function generator for message signal generation were required.

5 Design Analysis and Evaluation

5.1 Novelty:

Since AM (Amplitude Modulation) transmitter and receiver technology have been around for many years, their design is not new in and of itself. However, advancements in components, circuitry, and integration strategies maintain these systems functioning more smoothly and effectively. The novel aspect is in the ways in which these technologies have been refined and adjusted to meet modern needs, such as improved signal quality, lower power consumption, and compatibility with digital systems.

5.2 Design Considerations (PO(c))

Our primary goal was to reduce the loading impact in the low-pass filters we designed for the demodulator circuit. In light of this, we designed a Butterworth filter circuit using an op-amp. Because of this, passive filters rather than active ones were to be used while building our low pass filters for demodulator circuits.

5.2.1 Considerations to public health and safety

AM transmitter and receiver systems need to be built in compliance with regulatory standards governing electromagnetic radiation emissions in order to ensure that they do not pose health risks to the broader public. Carefully controlling the power output and antenna configuration is necessary to lower exposure levels.

5.2.2 Considerations to environment

Copper wire was utilized to link the circuit in order to carry out the undertaking. Since copper wire can be recycled and used again, it was given priority over other materials.

5.3 Investigations:

5.3.1 Design of Experiments:

In order to test the hardware implementation of the setup, tone modulation was performed in the *Old Simulation Laboratory* and *Telecommunication Laboratory* at Electrical and Electronic Engineering Faculty, BUET (supervised). In the first mentioned laboratory, oscillator output and its frequency were measured. For the oscillator the inductor had to be taken from the laboratory due to unavailability.

Modulation and demodulation for tone modulation were performed in the other laboratory due to time constraints and lack of biasing sources and accurate oscilloscope. For the tone modulation, the frequency was chosen in the range 1kHz ~ 10kHz and amplitude were taken in the range $3V_{pp}$ ~ $5V_{pp}$. The amplitude was not chosen too low so that the modulated signal can pass through the diode. However, it cannot exceed the carrier amplitude and therefore, we envisioned the experiment with these values.

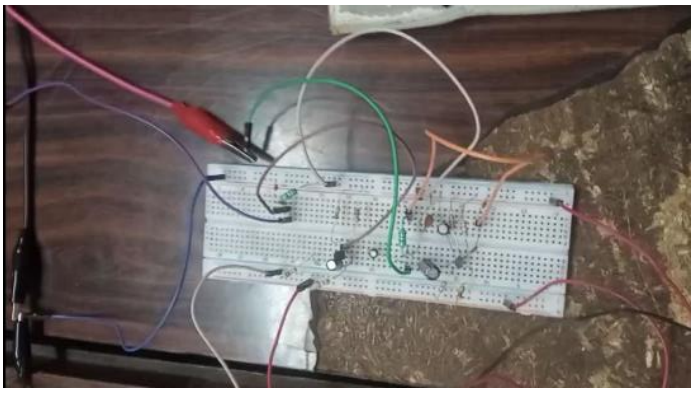

Figure 25 Modulation Experimental Setup

After the successful tone modulation, non-sinusoidal signals with the same frequency range were tested for modulation. However, demodulation was tested only for sinusoidal signal.

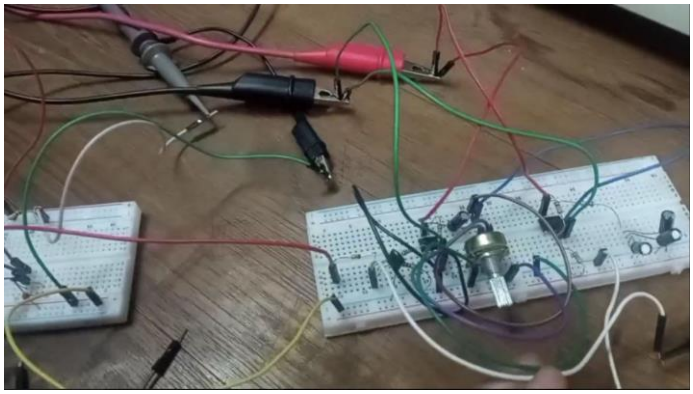

Figure 26 Demodulation Setup

5.3.2 Data Collection:

Carrier Generation: For the oscillator which generates the carrier, the circuit was operated independently to obtain the carrier frequency and its amplitude without loading.

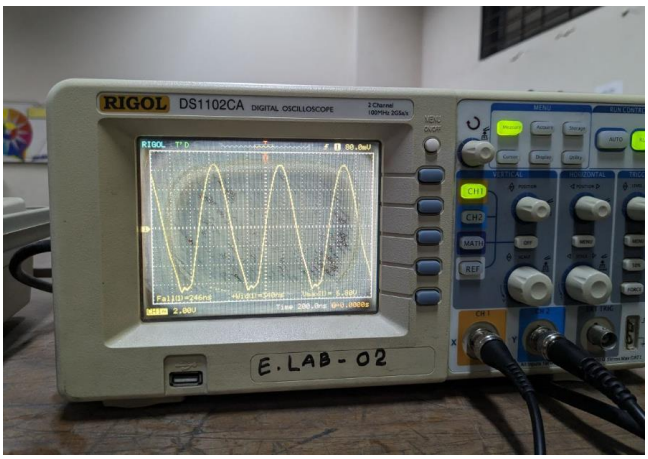

Figure 27 Oscillator Frequency Measurement

Modulation: For modulation, the laboratory was changed and inductor was purchased as became available. These modified circuit was tested without rechecking the carrier signal since the obtained signal agreed well with the simulations. The tested frequencies for sinusoidal tone modulation are 1kHz, 2kHz, 5kHz, 10kHz each for amplitude $5V_{pp}$ and $7V_{pp}$. The lowest one was also tested against $3V_{pp}$. For non-sinusoidal signals 1kHz and $5V_{pp}$ were used.

Figure 28 Modulation Setup For single Tone

Demodulation: For the demodulation, outputs were checked at the end of diode detector and final detector. Filter outputs and amplification output were ignored on the ground of getting the correct result at the final output.

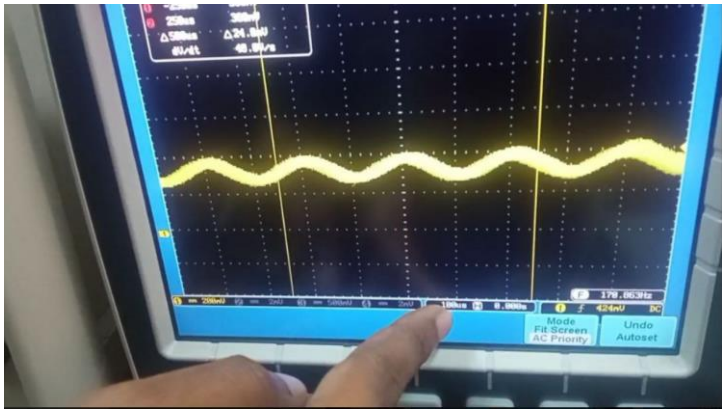

Figure 29 Demodulation Data Collection

Finally, after passing through the low-pass filter and then amplification results in the reconstructed signal.

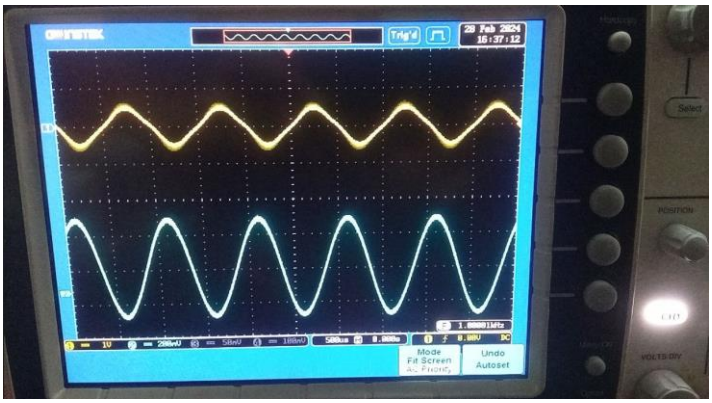

Figure 30 Message Signal (Cyan) and Reconstructed Signal (Yellow) (1 kHz)

5.3.3 Results and Analysis:

For the Colpitts oscillator, the amplitude was about 8.5V_{pp} and 644kHz principal frequency was obtained. The amplitude was not calculated theoretically due to nonlinearity whereas the experimental frequency is within 5.29 percent of theoretical value.

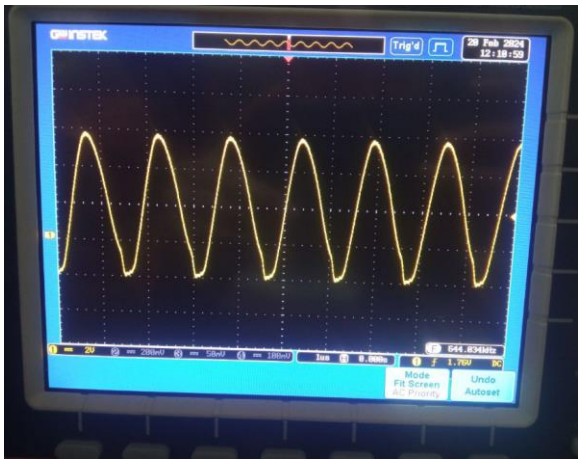

Figure 31 Colpitts Oscillator Output

Table 3 Colpitts Oscillator Measurement Data

Measurement	Theoretical	Experimental	Percent Deviation
Amplitude	-	$8.5V_{pp}$	-
Frequency	680kHz	644kHz	5.29%

For the modulation process, the outputs were obtained for both sinusoidal and non-sinusoidal processes. However, the amplitudes were not taken into consideration since only frequency components are of interests. Fourier spectrum was also obtained for some frequency tests to verify with theory.

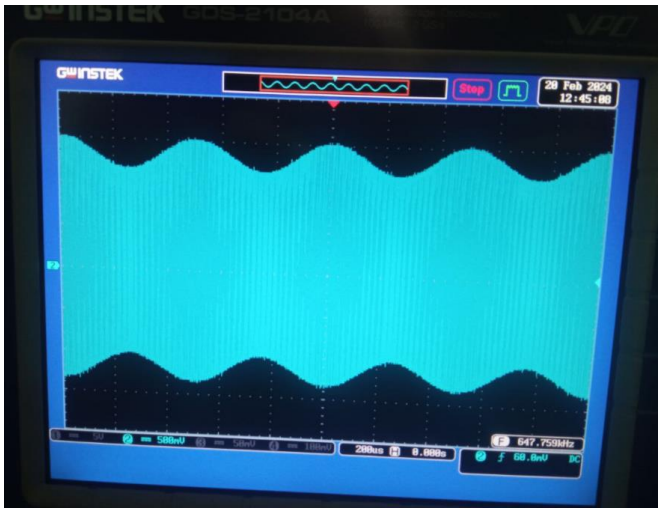

Figure 32 Modulation for single tone

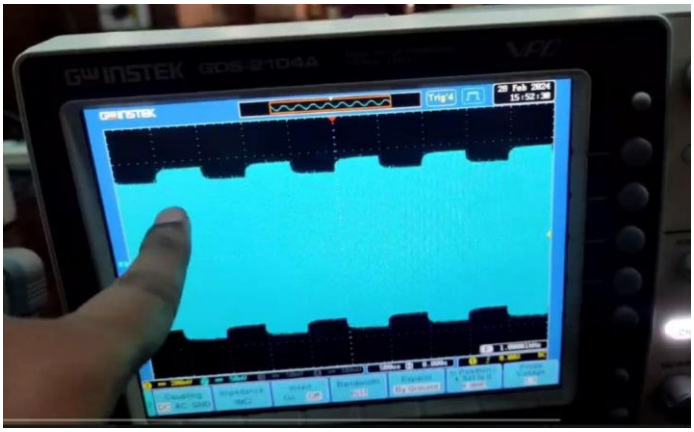

Figure 33 Modulation for Square Wave Signal

Figure 34 Modulation for Triangular Signal

For the demodulation, the results are tabulated below:

Table 4 Amplitude Demodulation Data

Message Signal (kHz)	Demodulated Signal (kHz)	Percent Deviation
10kHz	9.09kHz	9.1%
5kHz	4.55kHz	9%
2kHz	1.82kHz	9%

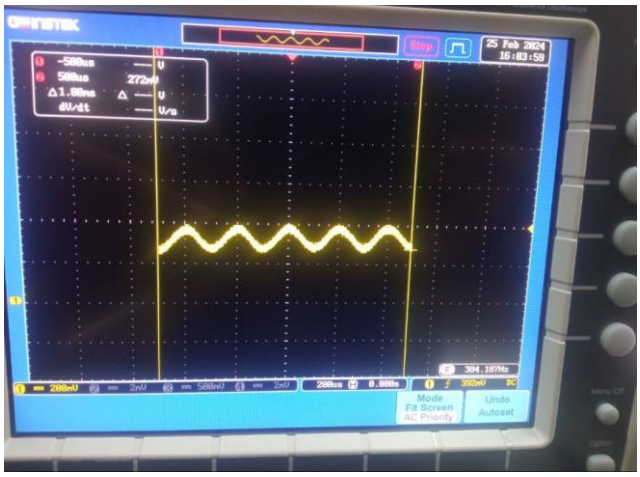

Figure 35 Demodulation Output at the diode Detector

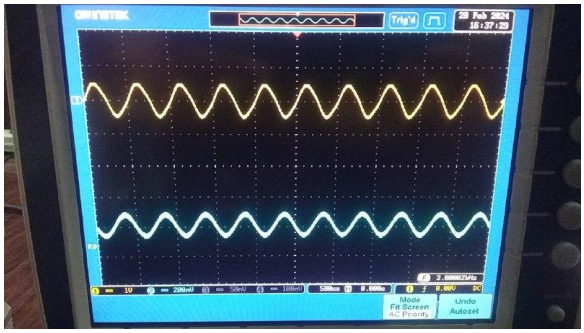

Figure 36 Message Signal and Reconstructed Signal (2 kHz)

5.3.4 Interpretation and Conclusion of Data:

From the experimental considerations, the data obtained gave about 9% inaccuracy in the message signal spectrum. However, it must be emphasized that this 9% inaccuracy was measured at the diode detector with still some ripples present which obscure the measurement of the frequencies from naked eye. The digital oscilloscope measurement functionality could not help due to noise at low frequencies and its measurement of only fundamental frequency. Again, for the same reason of noise, FFT functionality could not be used as well.

The inability of measuring message signal at the final output, at first attempts, was related to op-amp frequency characteristics or may be due to some common ground connection problems which were encountered several times during experiment. Again, due to biasing source shortage at Laboratory, multiple biasing was performed with the same source which at times resulted in violation of power rating of the sources disrupting the experimental arrangements.

Since, the proposed circuit performs correctly in both simulation and hardware, though up to diode detector in hardware implementation at several attempts, it can be asserted that the design is correct. The failure at the amplification and filter level, at some test run, are solely due to Op-Amps and biasing shortage which are independent of design procedure.

5.4 Limitations of Tools (PO(e))

The instruments used in the evaluation and design of AM transmitter and receiver systems have some limitations. Due to oscillators' and frequency control circuits' poor stability over time and temperature, the frequency of the sent or received signal may wander. Parts like amplifiers and filters have the potential to introduce noise, which taints incoming signals. Regulations and amplifier component limitations may restrict the transmitter's maximum power output. Issues with data interpretation and analysis can arise from measurement errors, environmental interference, and circuit non-linearities.

5.5 Impact Assessment (PO(f))

5.5.1 Assessment of Societal and Cultural Issues

Information, amusement, and cultural preservation are all greatly aided by AM radio, especially in isolated or underprivileged areas.

5.5.2 Assessment of Legal Issues

It is crucial to adhere to licensing and broadcasting rules in order to guarantee that AM transmitter and receiver systems operate lawfully within assigned frequency bands and power restrictions.

5.6 Sustainability Evaluation (PO(g))

It is important to take steps to minimize energy consumption, waste production, and resource depletion throughout the equipment's lifecycle, which includes installation, usage, and disposal, even though AM transmitter and receiver systems might not instantly harm the environment.

6. Reflection on Individual and Team work (PO(i))

6.1 Individual Contribution of Each Member

Table 5 Individual Contributions

Different Segment of Project	Individual Contribution
Group Discussion	2006166,2006172,2006178,2006190
Simulating Transmitter Side	2006172,2006190
Simulating Receiver Side	2006166,2006178
Preparing List of Components	2006166,2006172,2006178,2006190
Collecting Necessary Components	2006166,2006172,2006178,2006190
Hardware Implementation of Transmitter Side	2006172,2006190
Hardware Implementation of Receiver Side	2006166,2006178
Testing the Circuit in Laboratory	2006166,2006172,2006178,2006190
Preparing Final Report	2006166,2006172,2006178,2006190

6.2 Mode of the Team Work:

Our team consisted of 4 members. Each team member brought a unique set of skills, perspectives, and experiences.

Project Planning: After discussing the project's scope, the many components that need be completed gradually, its design, and its degree of difficulty with each other, the team decided on this project. Next, we made sure that each project component was properly planned.

Task Distribution: Following a successful project planning phase, we divided up the various project tasks among the team members.

Software Implementation: Some software implementation is needed for this project. First, we had to build the transmitter and receiver circuit using various simulation programs, such as Multisim and Pspice.

Hardware Implementation: The hardware implementation phase begins if the software simulation's results are satisfactory. We needed a variety of components for this hardware element; some members gathered the parts, while others assembled the parts on a breadboard. Hardware implementation was thus finished.

Testing and Validation: We tested our project in a lab to ensure its validity because we cannot declare our project finished without testing.

Communication and Discussion: We held multiple group talks during the project. Everyone in our group was free to maintain their opinions. All of our decisions were made with the team members' approval and following a meeting.

6.3 Diversity Statement of Team:

Every one of the team members have their own skill and expertise. We combined all the skills and expertise to complete our project. Whenever a problem arose, we were able to solve it because of the diverse knowledge of the team.

6.4 Log Book of Project Implementation:

Table 6 Log Book of Project Implementation

Date	Achievement	Individual Role	Team Role	Comments
20.01.24 & 21.01.24	Group Discussion	2006166,2006172,2006178,2006190 joined the group discussion	We focused on the theoretical background of the project and completed project planning	
26.01.24	Simulating Transmitter Side	2006172,2006190 Completed the simulation of transmitter part of the project using simulation software Multisim.	All members were present so that we could solve any problem we face easily	
27.01.24	Simulating Receiver Side	2006166,2006178 Completed the simulation of receiver part of the project using simulation software like pspiece, multisim.	All members were present so that we could solve any problem we face easily	
1.02.24	Preparing List of Components	2006178,2006190 Prepared the list of components.	Other team member gave their advice about which component should be bought	
2.02.24	Collecting Necessary Components	2006166, 2006178 Collected different components from market		

6.02.24	Hardware Implementation of Transmitter side	2006166,2006172,2006190 Implemented the hardware for the transmitter circuit		
7.02.24	Hardware Implementation of Receiver side	2006166,2006172,2006178 Implemented the hardware for the transmitter circuit 18.02.2024 & 25.02.2024 Testing the Circuit in Laboratory		
Day1-7.02.24 **Day2-10.02.24** **Day3-11.02.24** **Day4-17.02.24** **Day5-18.02.24** **Final Day-25.02.24**	Testing the circuit in Laboratory	Test Day-1: 2006166,2006172,2006178 Test Day-2: 2006172,2006178,2006190 Test Day-3: 2006166,2006172,2006178 Test Day-4: 2006166,2006178,2006190 Test Day-5: 2006166,2006172,2006178,2006190 Final Test: 2006166,2006172,2006178,2006190	All member tested different part of the circuit and confirmed the validity of our project.	This section of our project is crucial for demonstrating that we have successfully both modulated and demodulated a signal using AM modulation.
28.02.24 & 29.02.24	Preparing Final Report	2006172 divided the report writing tasks for all member and compiled it after collecting different part from different member	Other member completed their respected portion of report within the given time period	

7. Communication to External Stakeholders (PO(j))

7.1 Executive Summary

Our project was on amplitude modulation. In the transmitter side, Colpitts oscillator and power amplifier was used. In the receiver end, envelope detection method was done. To implement the project properly in hardware, simulation was done in PSPICE, cascading individual circuits together. The values of the different component were calculated theoretically. Hardware implementation was done together. The validity of our implementation was checked in hardware laboratory. In lab, sin wave was used as message signal having frequency relevant to the range of our voice signal. To check the outputs, proper biasing, ground connection was done. To see particular portions output, oscilloscope probe was connected through jumper in relevant points of the circuits. Thus, different stages output was achieved.

7.2 User Manual

Steps to follow:

- Set the DC bias voltage about 12V~17V using DC voltage source.
- Generate a sin wave of $3V_{pp}$ ~ $5V_{pp}$ having frequency of Hz or kHz range using signal generator.
- Apply the sin wave with proper connection as input message signal.
- Observe the outputs (modulated signal, demodulated signal) using oscilloscope.

8 Project Management and Cost Analysis (PO(k))

8.1 Bill of Materials

Table 7 Component Amount and Price

Components	Price (BDT)
Resistors: 1kΩ, 10kΩ, 100kΩ, 3.9kΩ	100
Capacitors 2.2nF, 20nF, 0.1uF,1µF ,10µF ,50µF, 100µF	120
Inductor: 50µH	50
Diode: N-4004 N-4148	15
BJT: BC 547	30
Op-Amp: uA741	225
Bread board: Medium size×4	340
Jumper wire: Male to male	60
Transportation	220
Total cost	**1160/-**

Component Bill:

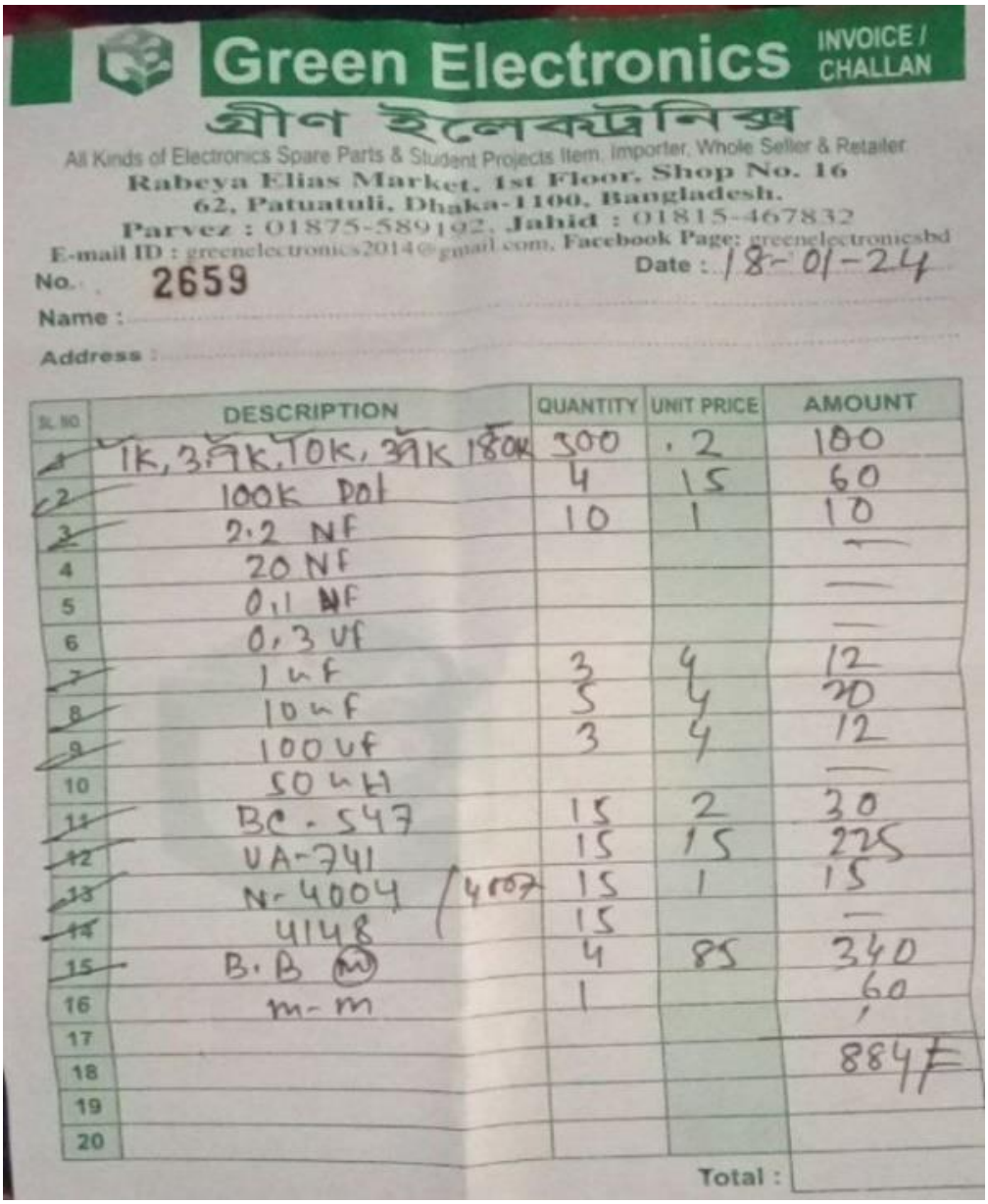

Green Electronics INVOICE / CHALLAN

গ্রীণ ইলেকট্রনিক্স

All Kinds of Electronics Spare Parts & Student Projects Item. Importer, Whole Seller & Retailer

Rabeya Elias Market, 1st Floor, Shop No. 16

62, Patuatuli, Dhaka-1100, Bangladesh.

Parvez : 01875-589192, Jahid : 01815-467832

E-mail ID : greenelectronics2014@gmail.com, Facebook Page: greenelectronicsbd

No. 2659 Date : 18-01-24

Name :

Address :

SL NO	DESCRIPTION	QUANTITY	UNIT PRICE	AMOUNT
1	1K, 3.9K, 10K, 39K 180K	300	.2	100
2	100K Pot	4	15	60
3	2.2 NF	10	1	10
4	20 NF			—
5	0.1 NF			—
6	0.3 uf			—
7	1 uF	3	4	12
8	10 uF	5	4	20
9	100 uf	3	4	12
10	50 uH			—
11	BC-547	15	2	30
12	UA-741	15	15	225
13	N-4004 / 4007	15	1	15
14	4148	15		—
15	B.B (M)	4	85	340
16	m-m	1		60
17				
18				884/=
19				
20				
			Total :	

Figure 37 Billing Receipt of Store

9 Future Work (PO(l))

Improvement of accuracy: The accuracy of the project could be increased if proper values of components that were used in simulation, were also used in hardware implementation. Moreover, the values written in the components was not of the exact same value which were found out using multimeter reading. Some resistors, capacitors, inductors were difficult to find in the market.

Energy efficiency design: Low-power design strategies exploration can enhance the energy efficiency of both the modulation and demodulation components. If proper components and power management techniques are investigated with more time in hand, the project would have been made more power efficient.

Multi-tone signal transmission: In the project, the modulation is done using only one frequency component as message signal. In near future, it can be extended to multi-tone signal transmission. Voice signal is one kind of multitone signal. Thus, by extending our project, voice signal transmission and receive can be done.

Trainer board design or PCB design: Designing a trainer board or PCB for laboratory experiment, as like as that of ANACOM board used in Telecommunication lab can be done for amplitude modulation experiment. This board can serve as a practical tool in laboratory settings, allowing for seamless implementation in various experiments related to amplitude modulation. Additionally, the circuit can be translated into a printed circuit board (PCB) design, enabling its use for both amplitude modulation and demodulation experiments.

Multi-Channel Communication: Extension of the project can be done to support multi-channel communication, enabling simultaneous transmission and reception of multiple signals. Moreover, investigation of more methods for channel separation and signal demultiplexing fusioning with the concept of our project may generate some more facilities in transmission of signal in low cost.

Outcome of the Project:

Table 8 Outcome of the Project

CO (Course Outcome) Statement)	Corresponding PO's	Explanation
Design project for real life application by applying communication related technologies with appropriate considerations to safety cultural, societal and environmental considerations (CO3)	PO(c)	Broadcast Radio, Aircraft communication, television sound communication etc. are real life applications. In our project amplitude modulation technique is used to explore more about this scheme.
Assess impact of communication system project design, Health, Safety, Legal and cultural issues (CO4)	PO(d)	The project was designed considering the impact on health, safety, legal and cultural issues.
Evaluate Sustainability and Impact of the designed communication system project in societal and environmental contexts (CO5)	PO(e)	Every component of the project was selected consciously not to harm or cause environmental hazard.
Demonstrate participation and leadership in designing communication system related problem solving (CO6)	PO(f)	The project work was divided neatly with proper leadership. All the members have done their job smoothly.
Communicate effectively on communication system design with presentation and detailed report (CO7)	PO(g)	Communication between us was done properly to accomplish the whole project.
Demonstrate project management and cost analysis for communication system project (CO8)	PO(h)	Project cost was analyzed among all the members of our project. The cost was then divided among us equally. The project was done with proper management as well as with minimum cost as much as we can.

10 References

1. Albulet, Mihai. *RF Power Amplifiers*. SciTech Publishing, 2001.

2. Clarke, Kenneth K., and Donald T. Hess. *Communication Circuits: Analysis and Design*. Addison Wesley Publishing Company, 1971.

3. Krauß, H., and J. L. Sanford. "Collector Modulation of Transistor Amplifiers." *IEEE Transactions on Circuit Theory*, vol. 12, no. 3, Jan. 1965, pp. 426–28. https://doi.org/10.1109/tct.1965.1082459.

4. Krauss, Herbert L., et al. *Solid-State Radio Engineering*. John Wiley and Sons, 1991.

5. Lathi, Bhagwandas Pannalal, and Zhi Ding. *Modern Digital and Analog Communication Systems*. Oxford UP, USA, 2010.

6. Misra, Devendra K. *Radio-Frequency and Microwave Communication Circuits: Analysis and Design*. John Wiley and Sons, 2004.

7. Razavi, Behzad. *Fundamentals of Microelectronics*. John Wiley and Sons, 2021.

8. Razavi, Behzad. *RF Microelectronics*. Pearson Professional, 2012.