BANGLADESH UNIVERSITY OF ENGINEERING AND TECHNOLOGY
DEPARTMENT OF ELECTRICAL AND ELECTRONIC ENGINEERING

EEE 318 (July 2024)

Control Systems Laboratory

Final Project Report

Section: C2 Group: 01

LINE FOLLOWING AND OBSTACLE AVOIDING BASED UVC DISINFECTION ROBOT

Course Instructors:

Shafin-Bin-Hamid, Lecturer
Sabbir Ahmed, Lecturer

Signature of Instructor: _____

Academic Honesty Statement:

IMPORTANT! Please carefully read and sign the Academic Honesty Statement, below. Type the student ID and name, and put your signature. *You will not receive credit for this project experiment unless this statement is signed in the presence of your lab instructor.*

"In signing this statement, We hereby certify that the work on this project is our own and that we have not copied the work of any other students (past or present), and cited all relevant sources while completing this project. We understand that if we fail to honor this agreement, We will each receive a score of ZERO for this project and be subject to failure of this course."

Signature: Nagib
Full Name: Md. Nagib Mahfuz
Student ID: 2006166

Signature: Mahi
Full Name: Muntaha Mubarrat Mahi
Student ID: 2006172

Signature: Mahmud Al Hadi Nafis
Full Name: Mahmud Al Hadi Nafis
Student ID: 2006178

Signature: Asif Hasan
Full Name: Mohammad Asif Hasan
Student ID: 2006189

Signature: NAVIN
Full Name: Mushfikur Rahman Navin
Student ID: 2006190

Table of Contents

1 Abstract……...3
2 Introduction……3
3 Design…… 4
3.1 Problem Formulation (PO(b))…….....4
3.1.1 Identification of Scope…… 4
3.1.2 Literature Review…… 5
3.1.3 Formulation of Problem…….. 5
3.1.4 Analysis…….. 6
3.2 Design Method (PO(a))……6
3.3 Circuit Diagram 9
3.4 Hardware Design 9
3.5 Full Source Code of Firmware 10
4 Implementation 15
4.1 Description 15
5 Design Analysis and Evaluation……..18
5.1 Novelty 18
5.2 Design Considerations (PO(c)) 18
5.2.1 Considerations of public health and safety 20
5.2.2 Considerations to Environment 20
5.2.3 Considerations of cultural and societal needs 20
5.3 Investigations (PO(d)) 18
5.3.1 Design of Experiment 18
5.3.2 Data Collection 19
5.3.3 Results and Analysis 19
5.3.4 Interpretation and Conclusions on Data 19
5.4 Limitations of Tools (PO(e)) 19
5.5 Impact Assessment (PO(f)) 19
5.5.1 Assessment of Societal and Cultural Issues 19
5.5.2 Assessment of Health and Safety Issues 19
5.5.3 Assessment of Legal Issues 20
5.6 Sustainability Evaluation (PO(g)) 20
5.7 Ethical Issues (PO(h)) 20
6 Reflection on Individual and Teamwork (PO(i)) 22
6.1 **Individual Contribution of Each Member** 20
6.2 Mode of Team Work 21
6.3 Diversity Statement of Team 21
6.4 Log Book of Project Implementation 21
7 Communication to External Stakeholders (PO(j))……24
7.1 User Manual 25
7.2 Youtube Link 25
8 Project Management and Cost Analysis (PO(k))……...26

8.1 Bill of Materials 26
8.2 Additional bills 26
9 Future Work (PO(l))…….....26
10 References…….....27

1 Abstract

This project addresses the increasing demand for affordable and environmentally friendly disinfection solutions by introducing an innovative Eco-friendly UVC Disinfecting Robot. Utilizing readily available components such as the Arduino Uno, L298n motor driver, sonar sensor, and infrared (IR) sensors, the system is designed to be a cost-effective, automated solution for disinfection. These components work together to give the robot autonomous movement, obstacle detection, and precise UVC disinfection capabilities.

The robot's primary goal is to effectively apply UVC (ultraviolet-C) light for thorough surface disinfection, providing an eco-conscious alternative to conventional chemical-based disinfection methods. UVC light is known for its powerful germicidal properties, making it a safe and efficient method for eliminating many harmful microorganisms, including bacteria and viruses.

2 Introduction

In light of the growing need for affordable and eco-friendly disinfection solutions, this report introduces the "UVC Disinfection Robot." It provides an in-depth analysis of the robot's design, construction, and functionality, emphasizing its use of simple, low-cost components. While not at the forefront of technological innovation, the robot offers a practical approach to reducing microbial threats in various settings.

The UVC Disinfection Robot is deliberately constructed with easily accessible components to keep costs minimal. It incorporates a sonar sensor for obstacle detection and two infrared (IR) sensors for basic navigation. These straightforward sensors enable the robot to move within its environment, albeit with certain mobility limitations.

At the core of the robot's disinfection mechanism is a UVC LED positioned on its base through the transparent pipe, which ensures effective disinfection of the area directly around it. Ultraviolet-C (UVC) light is renowned for its ability to neutralize a wide array of harmful microorganisms, including bacteria and viruses, by disrupting their genetic material, such as DNA and RNA. UVC light at approximately 254 nanometers is absorbed by the genetic material, triggering photodimerization. This process causes adjacent thymine or cytosine bases in the DNA or RNA strands to bond abnormally, forming structures that impair the microorganism’s ability to replicate and carry out essential functions. This renders the microorganism inactive and non-infectious.

By leveraging the germicidal capabilities of UVC light, the robot presents an environmentally sustainable alternative to conventional chemical disinfectants, promoting healthier living and working conditions. This report outlines the robot’s design and assembly in detail, highlighting its use of

economical components while explaining the scientific principles behind UVC-based disinfection. Furthermore, it shares experimental findings that validate the robot's surface disinfection efficiency, acknowledging the balance between technological sophistication and affordability in developing such systems.

3 Design

3.1 Problem Formulation (PO(b))

3.1.1 Identification of Scope

This project aims to design an autonomous UVC disinfection robot capable of navigating a predefined path, avoiding obstacles, and simulating surface disinfection using UVC LED light. The robot will feature:

- Line-Following Capability

The robot will use infrared (IR) sensors to detect and follow a black line on the ground, ensuring precise navigation along a predefined route. The sensors will enable continuous real-time adjustments to maintain alignment with the path.

- Obstacle Avoidance

A sonar sensor detects obstacles in the robot's path and triggers appropriate evasive actions. This ensures safe operation and adaptability to dynamic environments.

- Simulated UVC Disinfection

The robot will be equipped with simulated UVC LEDs, positioned to replicate the germicidal effects of ultraviolet-C light, effectively disinfecting surfaces directly beneath it.

- Power Management

Efficient power management will ensure sustained operation by optimizing energy distribution among the robot's sensors, motors, and UVC LED module, enabling uninterrupted functionality.
This design aims to create a cost-effective and sustainable robotic platform for automated disinfection applications.

3.1.2 Literature Review

Disinfection robots, particularly those utilizing ultraviolet-C (UVC) light, have gained significant prominence in recent years due to the increasing demand for efficient and sustainable disinfection methods. This review delves into existing research on UVC-based disinfection and robotic technologies, emphasizing their integration into affordable and eco-friendly solutions.

UVC light is well-known for its germicidal properties, effectively deactivating microorganisms by disrupting their genetic material. Numerous studies have confirmed its effectiveness in sanitizing both surfaces and air, making it a highly promising technology for combating pathogens.

Robots, known for their versatility across industries, have become essential in automating repetitive tasks. In the field of disinfection, robotic systems equipped with advanced navigation and mapping sensors have been developed to provide consistent and precise coverage during cleaning operations.

Iong Chio [1] has explored the integration of UVC emitters into mobile robotic platforms, significantly improving the efficiency of disinfection processes. These robots are capable of delivering targeted sanitization in a variety of environments.

Efforts to create cost-effective solutions have led to the development of disinfection robots using accessible components and open-source technologies, reducing production costs while maintaining their effectiveness.

A notable trend in disinfection robotics is the incorporation of multifunctional capabilities. Some robots are designed with additional features, such as vacuum cleaning modules, enabling them to perform multiple tasks and enhancing their practicality and utility.

Research by M. Sedaghat [2] has shown that multifunctional robots equipped with UVC technology can achieve up to 80% disinfection of microbial contaminants within just 20 minutes. These findings highlight the efficiency and practicality of integrating UVC disinfection systems into robotics, paving the way for innovative and sustainable approaches to microbial control.

3.1.3 Formulation of Problem

The challenge addressed in this project lies in the development of an autonomous, cost-effective, and environmentally sustainable robotic system capable of disinfecting surfaces using ultraviolet-C (UVC) light. The system must navigate predefined paths, avoid obstacles, and perform disinfection efficiently while operating with minimal human intervention. Key considerations include:

- **Cost-Effectiveness**: Ensuring the robot is affordable by utilizing readily available components and open-source technologies.
- **Operational Efficiency**: Achieving reliable navigation and obstacle avoidance to ensure consistent disinfection coverage.
- **Disinfection Effectiveness**: Optimizing the use of simulated UVC LEDs to maximize surface coverage and microbial neutralization.
- **Sustainability**: Providing an alternative to chemical disinfectants to minimize environmental impact.
- **Power Management**: Designing a power-efficient system to allow extended periods of autonomous operation.

3.1.4 Analysis

- **Line Following**

The robot's ability to follow a predefined path was realized using infrared (IR) sensors in conjunction with a Proportional-Integral-Derivative (PID) control algorithm. The IR sensors detected the contrast between the black guiding line and the surrounding surface, providing real-time feedback for navigation adjustments. The PID controller was meticulously calibrated to achieve an ideal balance between stability and responsiveness, enabling the robot to maintain accurate alignment with the path even during sharp turns or on uneven terrain.

- **Obstacle Detection and Avoidance**

A sonar sensor was utilized for obstacle detection, employing ultrasonic waves to measure distances to objects in the robot's path. When an obstacle was identified, the robot was programmed to halt, reverse, and execute a turn to bypass the obstruction. This obstacle-avoidance mechanism ensured uninterrupted operation and enhanced the robot's capability to navigate dynamic environments safely and efficiently.

- **UVC Disinfection**

High-intensity UV-C LEDs were selected for their germicidal efficacy in surface disinfection. These LEDs were installed on a servo-controlled platform, allowing directional adjustments for more targeted disinfection. The servo mechanism enabled the robot to optimize coverage by directing the UV-C light to specific areas, thereby enhancing its ability to neutralize microorganisms effectively across various surfaces.

- **Power Management**

To ensure reliable and efficient operation, the robot's power system was carefully designed. A buck converter was implemented to reduce the battery voltage to levels appropriate for the microcontroller and other components. Separate power sources were used for the motors and the remaining circuitry, which helped minimize voltage fluctuations and ensured stable performance across all subsystems.
By integrating these features, the robot achieved a robust combination of precision, functionality, and reliability, addressing the key challenges of autonomous navigation, obstacle avoidance, disinfection efficiency, and power management.

3.2 Design Method (PO(a))

The UVC Disinfection Robot is engineered to autonomously navigate its environment while efficiently disinfecting surfaces using ultraviolet-C (UVC) light. This section details the primary components and their

respective roles in the robot's operational framework.

- Sonar Sensor for Obstacle Detection

The robot features a front-mounted sonar sensor that continuously emits ultrasonic waves. These waves reflect back to the sensor when encountering an obstacle. The control system processes these reflections and, upon detecting an obstacle within a predefined proximity, triggers the robot to halt. This mechanism ensures safe navigation and prevents collisions. The Sonar sensor is adjusted with a servo motor to rotate the sensor between 70 degrees to 140 degrees to detect possible obstacles in front of the robot.

- IR Sensor for Directional Navigation

For obstacle circumvention, the robot employs two Infrared (IR) sensor systems strategically positioned on the left and right sides of its front part. Each IR sensor reads the black line and sends the signal to the microcontroller. If the black line is not detected, the robot moves in a certain algorithm to again come back in the line. To move the robot stably, each IR sensor needs the necessary adjustments.

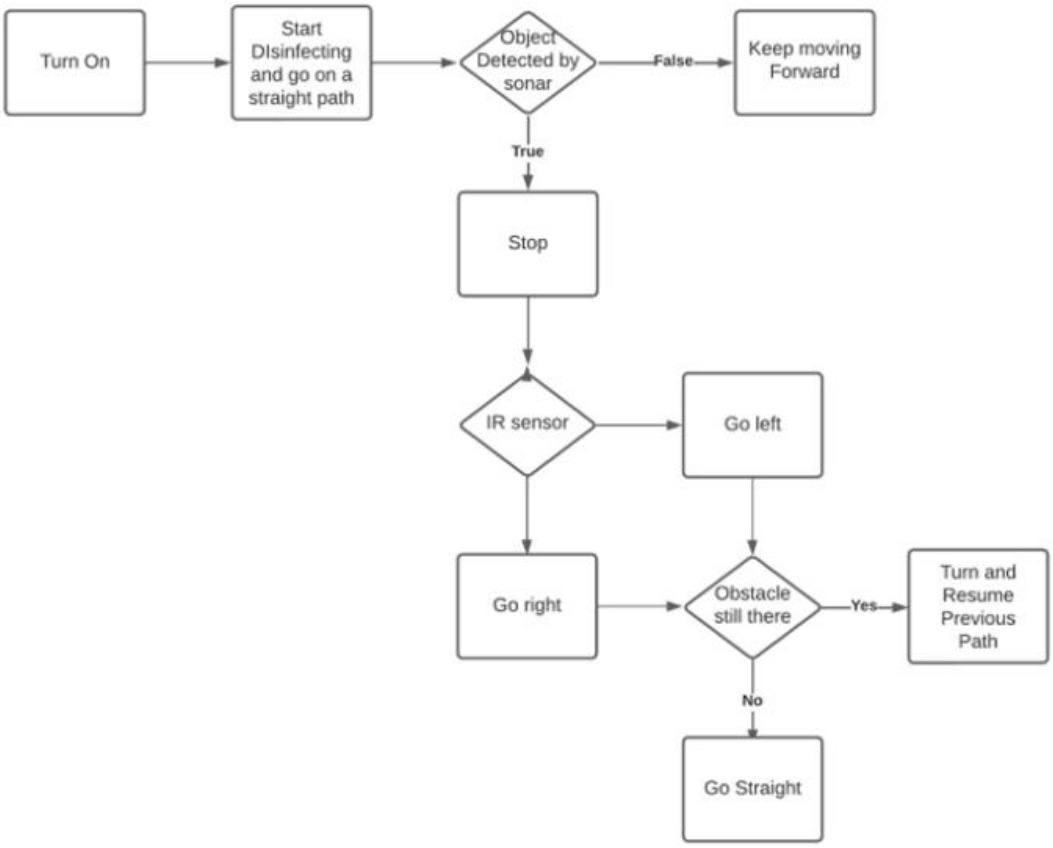

Fig:Algorithm for our robot movement

- Wheel Encoders with PID Controller for Straight-Line Travel

To ensure precise linear motion, the robot uses wheel encoders attached to its wheels. These encoders provide real-time feedback on the rotational motion of each wheel. The control system compares encoder signals to detect any disparity in wheel speeds. A Proportional-Integral-Derivative (PID) controller is utilized to correct these discrepancies by adjusting wheel speeds. This feedback mechanism ensures the robot maintains a straight trajectory during movement.

- UVC Disinfection Functionality

While navigating, the robot performs surface disinfection using a UVC LED mounted at its base. The UVC light irradiates the surface directly around the robot, leveraging its germicidal properties to deactivate harmful microorganisms such as bacteria and viruses. To achieve an effective disinfection dose of 3.5 mJ/cm^2, the required exposure time was calculated based on the UVC light intensity of the LEDs. The robot's speed and movement were calibrated to ensure that each surface area received adequate exposure to the UVC light.

3.3Circuit Diagram

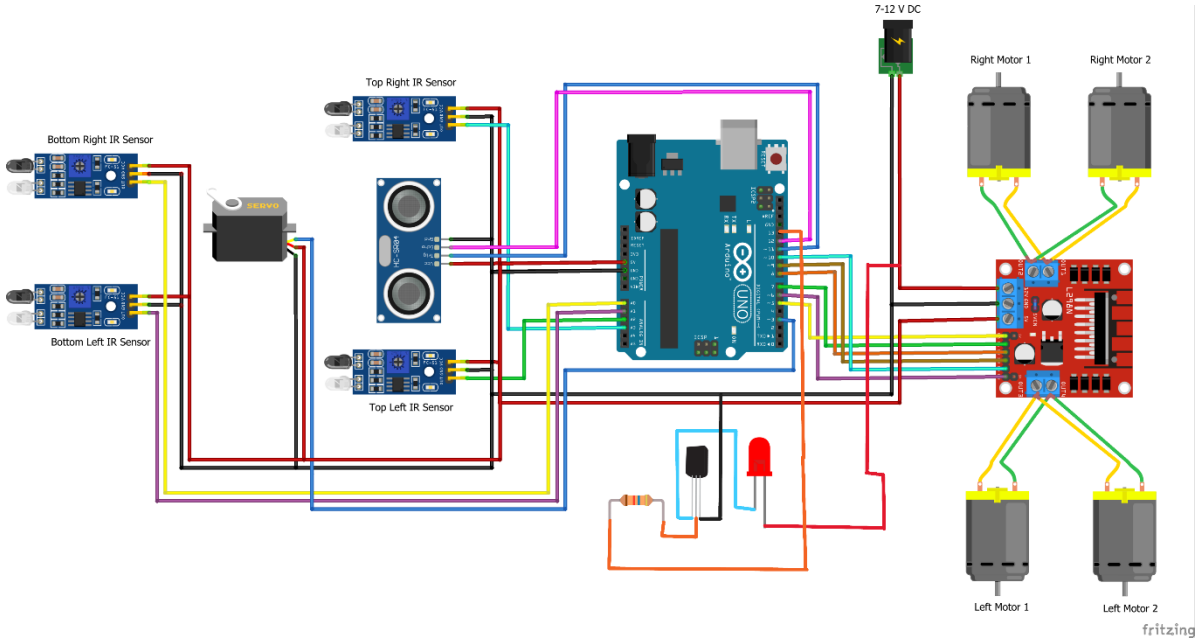

fig: Circuit connection of the Robot

3.4 Hardware Design

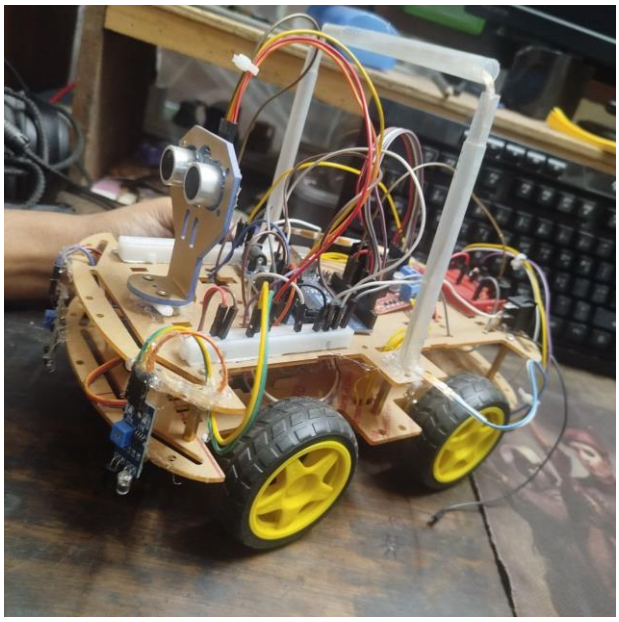

3.5Full Source Code of Firmware

```
#define enA 3//Enable1 L298 Pin enA
#define in1 2 //Motor1  L298 Pin in1
#define in2 4 //Motor1  L298 Pin in2
#define in4 5//Motor2  L298 Pin in3
#define in3 7 //Motor2  L298 Pin in4
#define enB 6 //Enable2 L298 Pin enB

#define L_S A1 //ir sensor Left
#define R_S A0 //ir sensor Right

#define echo A2    //Echo pin
#define trigger A3 //Trigger pin
#define servo A5

#define UVC 13 // UVC light
#define buzz 12 // buzzer

#include <Servo.h>

Servo myservo;

int Set=30;
int distance_L, distance_F, distance_R;

int speed = 90;

void setup(){ // put your setup code here, to run once

pinMode(UVC, OUTPUT);
pinMode(buzz, OUTPUT);

pinMode(R_S, INPUT);
pinMode(L_S, INPUT);

pinMode(echo, INPUT );
pinMode(trigger, OUTPUT);

pinMode(enA, OUTPUT);
pinMode(in1, OUTPUT);
```

```
pinMode(in2, OUTPUT);
pinMode(in3, OUTPUT);
pinMode(in4, OUTPUT);
pinMode(enB, OUTPUT);

analogWrite(enA, speed);
analogWrite(enB, speed);


distance_F = Ultrasonic_read();
 myservo.attach(A5);

for (int pos = 70; pos <= 140; pos += 5) {

    myservo.write(pos);
    delay(30);
  }
  for (int pos = 140; pos >= 0; pos -= 5) {
    myservo.write(pos);
    delay(30);
  }

for (int pos = 0; pos <= 70; pos += 5) {

    myservo.write(pos);
    delay(30);
}

delay(300);

digitalWrite(UVC, HIGH);
digitalWrite(buzz, LOW);
}


void loop(){
//if Right Sensor and Left Sensor are at White color then it will
call forword function
 if((digitalRead(R_S) == 0) &&(digitalRead(L_S) == 0)){
  if(distance_F > Set){forword();}
                  else{
                    digitalWrite(UVC, LOW);
```

```
                    Check_side();
                    obstacleAvoid();
                    digitalWrite(UVC, HIGH);
                    }
                  // else{ obstacleAvoid();}
 }

//if Right Sensor is Black and Left Sensor is White then it will
call turn Right function
else if((digitalRead(R_S) == 1)&&(digitalRead(L_S) == 0)){
  turnRight();
}

//if Right Sensor is White and Left Sensor is Black then it will
call turn Left function
else if((digitalRead(R_S) == 0)&&(digitalRead(L_S) == 1)){
  turnLeft();
  }

distance_F = Ultrasonic_read();
delay(10);
}


//*********************Ultrasonic_read***************************
long Ultrasonic_read(){
  digitalWrite(trigger, LOW);
  delayMicroseconds(2);
  digitalWrite(trigger, HIGH);
  delayMicroseconds(10);
  long time = pulseIn (echo, HIGH);
  return time / 29 / 2;
}

void obstacleAvoid(){
  //  Stop();
  // delay(100);
    if(distance_L > distance_R){
  // backword();
  // delay(300);
  turnLeft();
  delay(500);
```

```
  forword();
  delay(600);
  turnRight();
  delay(300);
  forword();
  delay(700);
  turnRight();
  delay(300);
  forword();
  delay(572);
  turnLeft();
  delay(500);
  }
  else{
  turnRight();
  delay(500);
  forword();
  delay(600);
  turnLeft();
  delay(500);
  forword();
  delay(600);
  turnLeft();
  delay(400);
  turnRight();
  delay(500);
  }
}

void Check_side(){
    Stop();
    digitalWrite(buzz, HIGH);
    delay(100);

for (int pos = 70; pos <= 140; pos += 5) {
    myservo.write(pos);
    delay(30);
  }
    delay(300);
    distance_L = Ultrasonic_read();
    delay(100);
 for (int pos = 140; pos >= 0; pos -= 5) {
```

```
    myservo.write(pos);
    delay(30);
  }
    delay(500);
    distance_R = Ultrasonic_read();
    delay(100);
for (int pos = 0; pos <= 70; pos += 5) {
    myservo.write(pos);
    delay(30);
  }
    delay(300);
    digitalWrite(buzz, LOW);
}

void forword(){  //forword
digitalWrite(in1, HIGH); //Left Motor backword Pin
digitalWrite(in2, LOW); //Left Motor forword Pin
digitalWrite(in3, LOW); //Right Motor forword Pin
digitalWrite(in4, HIGH); //Right Motor backword Pin
}

void backword(){

//backword
digitalWrite(in1, LOW); //Left Motor backword Pin
digitalWrite(in2, HIGH); //Left Motor forword Pin
digitalWrite(in3, HIGH); //Right Motor forword Pin
digitalWrite(in4, LOW); //Right Motor backword Pin
}

void turnRight(){ //turnRight
digitalWrite(in1, HIGH); //Left Motor backword Pin
digitalWrite(in2, LOW); //Left Motor forword Pin
digitalWrite(in3, HIGH); //Right Motor forword Pin
digitalWrite(in4, LOW); //Right Motor backword Pin
}

void turnLeft(){ //turnLeft
digitalWrite(in1, LOW); //Left Motor backword Pin
digitalWrite(in2, HIGH); //Left Motor forword Pin
digitalWrite(in3, LOW); //Right Motor forword Pin
digitalWrite(in4, HIGH); //Right Motor backword Pin
```

```
}

void Stop(){ //stop
digitalWrite(in1, LOW); //Left Motor backword Pin
digitalWrite(in2, LOW); //Left Motor forword Pin
digitalWrite(in3, LOW); //Right Motor forword Pin
digitalWrite(in4, LOW); //Right Motor backword Pin
}
```

Table: Source Code for the main program

4 Implementation

4.1 Description

The implementation of the UVC Disinfection Robot involves several stages, including hardware selection, system design, integration of components, and programming. Below is a detailed breakdown of the key steps involved in the implementation process:

- **Hardware Selection**

The first step in the implementation was the careful selection of components to ensure the robot is both cost-effective and capable of performing the necessary disinfection and navigation tasks. The key components selected include:

- **Microcontroller**: An Arduino board was chosen for its versatility, ease of programming, and compatibility with various sensors and actuators.
- **Sonar Sensor**: A sonar sensor was chosen for obstacle detection. This sensor operates by emitting ultrasonic waves and measuring the time it takes for the waves to return after hitting an obstacle. The robot uses this information to stop or take evasive action when an obstacle is detected.
- **IR Sensors**: Infrared (IR) sensors were selected for line-following and directional navigation. These sensors detect the presence of the black line on the floor and guide the robot along the predefined path.
- **UVC LEDs**: High-intensity UVC LEDs were chosen to perform the disinfection task. These LEDs emit ultraviolet light at a wavelength of approximately 254 nanometers, which is effective in deactivating microorganisms.
- **Motors and Wheel Encoders**: Motors and wheel encoders were selected to provide the necessary movement for the robot. The encoders provide feedback on the rotational motion of the wheels, helping the robot maintain accurate movement and direction.
- **Power Supply**: A rechargeable battery pack was chosen to power the robot. The power supply is managed using a buck converter to ensure the correct voltage for the microcontroller and other components.

- **System Design**

The system design focused on creating an efficient and reliable robot capable of autonomous navigation and surface disinfection. The robot was designed with the following key features:

- **Obstacle Avoidance**: The robot utilizes a sonar sensor for detecting obstacles in its path. Upon detection, the robot stops, reverses, and turns to navigate around the obstacle, ensuring smooth movement through the environment.
- **Line Following**: The IR sensors are used for line following. The robot detects a black line on the floor and uses this as a guide for movement. The robot adjusts its direction based on sensor feedback to ensure it follows the path accurately.
- **UVC Disinfection**: The UVC LEDs are mounted on the robot's base. As the robot moves along the surface, the UVC light is directed towards the ground to disinfect the area beneath. The disinfection process is continuously active as the robot follows its path.
- **Wheel Encoders and PID Control**: The wheel encoders provide feedback on the robot's movement. A PID controller is employed to ensure that both wheels rotate at the same speed, maintaining a straight path and correcting any deviations.

❖ **Component Integration**

Once the components were selected, the next step was the integration of the various hardware components. The microcontroller was programmed to receive signals from the sonar and IR sensors, process this data, and control the motors for movement. The UVC LEDs were controlled based on the robot's position, ensuring that disinfection occurred as it moved along its path.

- **Sonar Sensor Integration**: The sonar sensor was connected to the microcontroller, and a detection algorithm was implemented. The robot was programmed to halt, reverse, and turn upon detecting an obstacle within a specified range.
- **IR Sensor Integration**: The IR sensors were placed at the front of the robot, allowing it to follow the black line. The microcontroller reads the sensor signals and adjusts the movement to follow the line.
- **PID Control for Movement**: The wheel encoders were integrated with the motor control system. The feedback from the encoders was used by the PID controller to adjust the motor speeds, ensuring straight-line motion.

❖ **Software Development**

The software development phase involved programming the microcontroller to control the robot's behavior based on sensor inputs. The key functions programmed into the robot include:

- **Obstacle Detection and Avoidance**: The sonar sensor data was used to detect obstacles. When an obstacle was detected, the robot was programmed to stop, reverse, and then turn in the opposite direction to avoid the obstacle.
- **Line Following**: The IR sensors were calibrated to detect the black line. The robot adjusted its direction to follow the line, using simple logic to determine whether to turn left or right.
- **UVC Disinfection**: The UVC LEDs were activated based on the robot's movement, ensuring that the surface beneath the robot was continuously disinfected as it traveled along its path.
- **PID Control for Precision**: The PID control algorithm was implemented to adjust the motor speeds based on the feedback from the wheel encoders. This allowed the robot to maintain a straight path even if one wheel moved faster than the other.

❖ **Testing and Calibration**

After assembling the components and programming the robot, extensive testing was conducted to ensure that all functions were operating as expected. The following tests were performed:

- **Obstacle Avoidance Testing**: The robot was tested in an environment with various obstacles to ensure that the sonar sensor correctly detected the obstacles and prompted the robot to take evasive action.
- **Line Following Testing**: The robot was tested on a floor with a black line to verify that the IR sensors effectively guided the robot along the line.
- **UVC Disinfection Testing**: The UVC LEDs were tested to ensure that they emitted sufficient light to disinfect surfaces effectively. The robot's speed and movement were adjusted to ensure adequate exposure time for disinfection.
- **PID Control Testing**: The robot's movement was tested to ensure that the PID controller maintained a straight path, with adjustments made to optimize the control algorithm for stability and responsiveness.

❖ **Final Adjustments**

Based on the results of the testing phase, minor adjustments were made to the robot's hardware and software. These adjustments focused on improving the robot's navigation accuracy, obstacle avoidance behavior, and disinfection coverage.

❖ **Deployment and Future Enhancements**

Upon successful testing, the UVC Disinfection Robot was deployed for initial field testing in real-world environments. Future enhancements include improving the robot's autonomous navigation capabilities, integrating additional sensors such as LiDAR for more precise mapping, and developing a remote control and monitoring system for larger-scale operations.

In conclusion, the successful implementation of the UVC Disinfection Robot demonstrates the effectiveness of combining simple sensors, efficient control algorithms, and UVC disinfection technology to create an affordable and scalable solution for surface disinfection in various environments.

5 Design Analysis and Evaluation

5.1 Novelty

The UVC Disinfection Robot stands out in its innovative design and functional integration of cost-effective components such as the Arduino Uno, sonar sensors, and high-intensity UVC LEDs. Its novelty lies in combining line-following and obstacle-avoidance capabilities with precise UVC surface disinfection, creating an efficient and environmentally sustainable alternative to chemical-based methods. The use of a PID controller for straight-line travel and the meticulous calibration for optimal UVC exposure time further enhance its effectiveness and reliability in disinfection tasks.

5.2 Design Considerations (PO(c))

5.2.1 Considerations to public health and safety

The UVC Disinfection Robot prioritizes public health and safety by utilizing UVC light to effectively eliminate harmful microorganisms, including bacteria and viruses. By reducing the reliance on chemical disinfectants, it minimizes exposure to potentially hazardous substances, ensuring a safer and healthier environment for users and the general public.

5.2.2 Considerations to environment

Designed with environmental sustainability in mind, the UVC Disinfection Robot provides an eco-friendly alternative to conventional chemical-based disinfection methods. By employing UVC light, it reduces the environmental impact associated with chemical residues and waste, promoting a cleaner and greener approach to disinfection.

5.2.3 Considerations to cultural and societal needs

The robot addresses cultural and societal needs by offering a cost-effective and accessible disinfection solution, particularly beneficial for communities with limited resources. Its easy-to-use design and reliance on readily available components ensure that a wide range of users can deploy it to maintain hygiene and safety standards in various settings.

5.3 Investigations (PO(d))

5.3.1 Design of Experiment

The design of the experiment involved setting up controlled environments to test the robot's line-following accuracy, obstacle avoidance efficiency, and UVC disinfection effectiveness. Parameters such as sensor placement, robot speed, and UVC exposure time were systematically varied to assess their

impact on performance.

5.3.2 Data Collection

Data was collected through repeated trials, recording metrics such as navigation precision, obstacle detection and avoidance rates, and microbial reduction on surfaces exposed to UVC light. Sensors and monitoring tools were used to gather quantitative data on the robot's performance under different conditions.

5.3.3 Results and Analysis

The analysis of the collected data revealed that the robot consistently followed predefined paths with minimal deviation, effectively detected and avoided obstacles, and achieved significant microbial reduction on treated surfaces. Statistical methods were used to evaluate the reliability and significance of the results.

5.3.4 Interpretation and Conclusions on Data

The interpretation of the data confirmed the robot's capability to autonomously navigate and disinfect surfaces efficiently. The conclusions drawn highlight the robot's potential as a practical and scalable solution for automated disinfection, validating the design and implementation approach.

5.4 Limitations of Tools (PO(e))

The primary limitations of the tools used include the restricted detection range of the sonar sensor, which may miss smaller or low-lying obstacles, and the limited accuracy of the IR sensors in highly reflective or dark environments. Additionally, the UVC LEDs' effectiveness can be impacted by the robot's speed and the surface characteristics, necessitating precise calibration to ensure consistent disinfection.

5.5Impact Assessment (PO(f))

5.5.1 Assessment of Societal and Cultural Issues

The UVC Disinfection Robot addresses societal and cultural issues by offering an accessible, cost-effective solution for disinfection. It supports public health initiatives and can be particularly beneficial in underserved communities, promoting equitable access to advanced disinfection technologies.

5.5.2 Assessment of Health and Safety Issues

The robot enhances health and safety by effectively eliminating harmful microorganisms using UVC light, reducing the spread of infections. It minimizes reliance on chemical disinfectants, which can have adverse health effects, thus contributing to a safer environment for users.

5.5.3 Assessment of Legal Issues

The deployment of the UVC Disinfection Robot must comply with regulations regarding the use of UVC light and safety standards for robotic devices. Ensuring adherence to these legal requirements helps mitigate risks and aligns the robot's use with established safety protocols.

5.6 Sustainability Evaluation (PO(g))

The UVC Disinfection Robot promotes sustainability by utilizing eco-friendly UVC light instead of chemical disinfectants, reducing environmental pollution. Its design prioritizes energy efficiency, using rechargeable batteries and optimizing power management to minimize energy consumption, contributing to a greener and more sustainable disinfection solution.

5.7Ethical Issues (PO(h))

The use of the UVC Disinfection Robot raises ethical considerations regarding the potential for job displacement in manual cleaning roles and ensuring the safe deployment of UVC light to prevent accidental exposure. Addressing these issues involves creating training programs for displaced workers and establishing strict operational protocols to ensure safety.

6 Reflection on Individual and Team work (PO(i))

6.1Individual Contribution of Each Member

ID	Contribution
2006166	Project design, hardware implementation, debugging
2006172	Project design, coding section, evaluating design
2006178	Project idea selection, evaluating design, circuit implementation
2006189	Project idea selection, coding section, hardware implementation

2006190	Project idea selection, coding section, evaluating design

6.2 Mode of Team Work

Our mode of teamwork is based on both collaboration and task allocation. We have always tried to work together and share our ideas to finalize our decisions. For some parts of our project, work is allocated to individual members based on their expertise and co-ordination is done accordingly to ensure the works of each member come together seamlessly.

6.3 Diversity Statement of Team

We believe that diversity in a team is one of its core strength and brings the best out of a team. We have tried to create an environment where members of different backgrounds and experiences can get the chance to express themselves and thrive. We respect and value each member's unique ideas and contributions. Since, every member does not have the same level of theoretical knowledge or practical experience, we have allocated our project works according to individual strength. This diversity in our team definitely helped us achieve our objective. Thus we have maintained mutual respect and understanding between members to make us a better functioning team.

6.4 Log Book of Project Implementation

Date/Week	Milestone achieved	Individual Role	Team Role	Comments
Week 4	Project idea selection	2006189, 2006190	Searched for innovative and real life project idea	Got a relatively new project idea

Week 5-6	Research and design	2006166, 2006172, 2006178	Searched resources and knowledge necessary for project	It was not easy as this project was not done before.
Week 7	Coding section	2006189, 2006190	Checked if the project is actually feasible	Project simulation is successful
Week 8	Component listing and buying	2006166, 2006190, 2006178, 2006189	Tried to build the project with less cost and with tools available in market	Bought all components within a reasonable amount
Week 9-11	Circuit implementation	Every member attended	Built the circuits and tried to maintain a simple and clean connection	It was the best part of our project. We enjoyed every bit of it.

Week 12	Evaluating outputs and fixing errors	2006172, 2006178, 2006189	Found out possible reasons for errors and debug them	There were some errors which are tricky to find. We have faced some hardships.
Week 13	Finalize the project	2006190, 2006189, 2006172	Made the project ready for demonstration	Our hard work comes to an end.

7 Communication to External Stakeholders (PO(j))

Executive Summary

The UVC Disinfection Robot project aims to address the need for affordable and eco-friendly disinfection solutions. Utilizing readily available components such as Arduino Uno, sonar sensors, and high-intensity UVC LEDs, the robot autonomously navigates and disinfects surfaces. It offers a sustainable alternative to chemical disinfectants, leveraging the germicidal properties of UVC light. The robot is designed for precise navigation and effective obstacle avoidance, ensuring efficient disinfection. By minimizing environmental impact and promoting public health, this innovative solution meets societal needs for safe and cost-effective disinfection technologies.

7.1 User Manual

This manual provides instructions for operating the UVC Disinfection Robot.

- **Setup:**
  - Charge the Battery: Ensure the rechargeable battery is fully charged.
  - Power On: Switch on the robot using the power button.
- **Operation:**
  - Place the Robot: Position the robot on the surface to be disinfected.
  - Line Following: Ensure the black guiding line is in place for the robot to follow.
  - Obstacle Avoidance: Clear large obstructions from the path but allow small objects to test the robot's avoidance capability.
- **Maintenance:**
  - Clean Sensors: Regularly clean the IR and sonar sensors to ensure accurate detection.
  - Recharge Battery: Recharge the battery after each use to maintain performance.

❖ **Safety:**

- Avoid Direct UVC Exposure: Do not look directly at the UVC LEDs during operation.

- Monitor Operation: Supervise the robot during its initial use to ensure proper functionality.

7.2 YouTube Link

https://youtu.be/5AK_dxGmKwU?si=l3dVLJ0eP9YXhzfQ

8 Project Management and Cost Analysis (PO(k))

8.1Bill of Materials

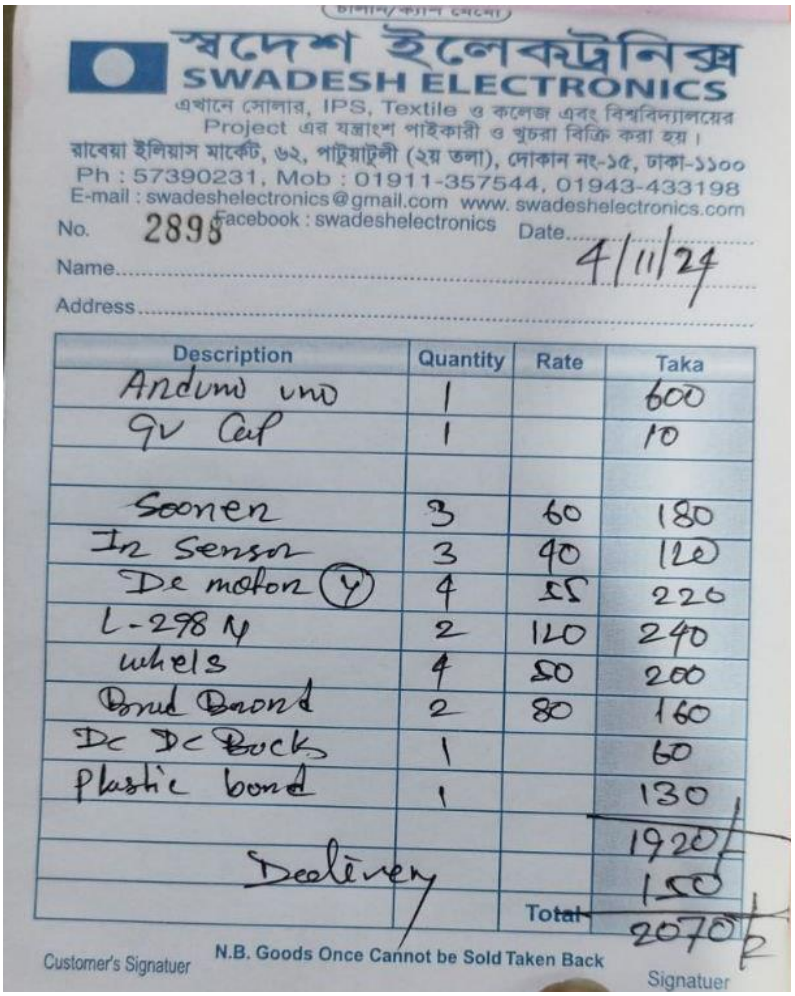

স্বদেশ ইলেকট্রনিক্স
SWADESH ELECTRONICS
এখানে সোলার, IPS, Textile ও কলেজ এবং বিশ্ববিদ্যালয়ের Project এর যন্ত্রাংশ পাইকারী ও খুচরা বিক্রি করা হয়।
রাবেয়া ইলিয়াস মার্কেট, ৬২, পাটুয়াটুলী (২য় তলা), দোকান নং-১৫, ঢাকা-১১০০
Ph : 57390231, Mob : 01911-357544, 01943-433198
E-mail : swadeshelectronics@gmail.com www. swadeshelectronics.com
Facebook : swadeshelectronics

No. 2898 Date 4/11/24

Name

Address

Description	Quantity	Rate	Taka
Arduino uno	1		600
9v Cap	1		10
Sonen	3	60	180
In Sensor	3	40	120
Dc motor (4)	4	55	220
L-298 N	2	120	240
whels	4	50	200
Bread Board	2	80	160
Dc Dc Buck	1		60
Plastic bond	1		130
			1920/-
Delivery			150
		Total	2070/-

Customer's Signatuer N.B. Goods Once Cannot be Sold Taken Back Signatuer

8.2 Additional bills

Components	Price (TK)
plywood	200
Robot Chassis	600
LED	120
Li-ion battery	1350
Total	4340

9 Future Work (PO(l))

As we look towards the future, we are excited about the potential advancements and enhancements for our UVC disinfection robot. The following outlines key areas under consideration for the continued development and optimization of the system:

- **Autonomous Navigation Improvement**

We recognize the importance of advancing our navigation capabilities through the integration of sophisticated algorithms and state-of-the-art navigation technologies. These innovations will empower the robot to adapt to dynamic environments, navigate complex obstacles with greater precision, and optimize disinfection routes autonomously.

- Remote Monitoring and Control

To enhance operational efficiency, we are exploring the development of a remote monitoring and control system. This system would enable the simultaneous management of multiple robots, providing real-time progress tracking and the ability to intervene as needed, particularly in large-scale deployments.

- **Data Analytics and Reporting**

Implementing data analytics capabilities is a key focus for improving operational insights. By analyzing the disinfection data collected by the robot, we aim to gain a comprehensive understanding of disinfection coverage, patterns, and overall effectiveness. Our objective is to generate user-friendly reports that will support facility managers and health authorities in making informed decisions.

- **Integration with IoT**

We are exploring the integration of our robot into the Internet of Things (IoT) ecosystem. This would facilitate real-time communication with other smart devices within a building, allowing for enhanced coordination, such as optimizing air quality alongside disinfection efforts, to further improve overall environmental health.

- **UV-C Dosage Control**

Precise regulation of UV-C dosage is critical for both disinfection efficacy and energy efficiency. We are developing a system that will allow for dynamic calculation and regulation of UV-C dosage based on factors such as room size, occupancy, and pathogen load.

- **Obstacle Detection and Avoidance**

Improving the robot's obstacle detection and avoidance capabilities is a key priority. We are considering the use of advanced sensors, such as LiDAR, to enable 3D mapping of the environment. This would significantly enhance navigation precision and allow for more effective and adaptable movement through complex environments.

- **Energy Efficiency**

As part of our commitment to sustainability, we are focusing on improving the energy efficiency of the robot. This includes investigating the use of energy-efficient UV-C LEDs and exploring alternative power sources, such as solar panels, to reduce the environmental impact of robot operation.

- **User Interface and Interactivity**

To improve user experience, we are designing a user-friendly interface that simplifies the setup and operation of the robot. Considerations for interactive features, such as touchscreens or voice command functionality, are being made to enhance ease of use and accessibility.

- **Regulatory Compliance and Certification**

Ensuring that the robot complies with industry regulations and standards is a top priority. We are actively pursuing the necessary approvals and certifications to meet the requirements of specific markets and industries.

- **Sustainability Initiatives**

Sustainability is central to our mission. We are continuously exploring the use of eco-friendly materials, sustainable manufacturing processes, and environmentally responsible end-of-life solutions for the robot to minimize its environmental footprint.

10 References

[1] I. Chio, K. Ruan, Z. Wu, K. I. Wong, L. M. Tam, and Q. Xu, "Design and autonomous navigation of a new indoor disinfection robot based on disinfection modeling," *IEEE Trans. Autom. Sci. Eng.*, vol. 20, no. 1, pp. 649-661, Jan. 2023, doi: 10.1109/TASE.2022.3165084.

[2] M. Sedaghat, P. Madani, Y. Alvari, and A. Jahangiri, "Studying the effect of a disinfection robot using UVC lights, on fungi and microbes in the hospital environment," in *Proc. 10th RSI Int. Conf. Robotics Mechatronics (ICRoM)*, Tehran, Iran, 2022, pp. 296-301, doi: 10.1109/ICRoM57054.2022.10025281.

[3] A. Zaman et al., "UVC-PURGE: A novel cost-effective disinfection robot for combating COVID-19 pandemic," *IEEE Access*, vol. 10, pp. 37613-37634, 2022, doi: 10.1109/ACCESS.2022.3163243.