Geodesic Projection: A Multi-Slot Compression Pipeline with Adaptive Phase-, Gauge-, Thermal-, and Drift-Aware Extensions

William Ken Ohara Stewart
NagusameCS Independent Research
will@nagusame.dev https://github.com/NagusameCS/HyperTensor

April 2026

HyperTensor Project | Author: William Ken Ohara Stewart (NagusameCS) | Source: https://github.com/NagusameCS/HyperTensor

---

Note

Project nomenclature. We use a four-level naming hierarchy throughout this paper series. *HyperTensor* is the project (compiler, runtime, kernels, theory). *Geodesic Projection (GP)* — the subject of this paper — is the inference-time pipeline that factorises every compressible weight along its dominant geometric directions. *Geodesic Runtime Compression (GRC)* is the attention-only subset of GP and is the empirical anchor of the companion paper. *OTT/GTC* is the Riemannian-manifold theoretical framework built on top of GP and is treated separately. In short: GRC ⊂ GP ⊂ HyperTensor, and OTT/GTC is the theoretical superstructure that explains why GP works.

Abstract

We describe *Geodesic Projection* (GP), the full multi-slot calibration-free compression pipeline implemented in the `geodessical` runtime, and four adaptive extensions that turn GP from a static rank-k scheme into a phase-, gauge-, thermal-, and drift-aware one. GP generalises the attention-only construction of the companion paper to all seven compressible weight matrices in a transformer block (Q, K, V, O, FFN up/gate/down) with a per-slot decomposition strategy chosen from the slot's measured singular spectrum, a manifold-curvature-driven per-layer rank allocation, and a persistent two-tier on-disk geometry + projected-weight cache validated by a single "depth-sink" layer hash. We then describe four orthogonal adaptive layers shipped on top of GP: (i) *MCR phase-aware rank allocation* that detects the empirical Mix/Compress/Refine layer phases and re-budgets rank; (ii) *Axiom Gauge*, an exact GL(d) residual-stream gauge optimisation that strictly lowers the total tail-energy of low-rank factorisations and is bakeable, zero-cost at inference; (iii) *Thermal Rank* and a tokens-per-joule diffplan term that couple rank to NVML-reported temperature and power; and (iv) *Online Basis*, a rejection-driven Oja [1] update that revises the basis only when speculative-decode rejections expose drift. We present the cross-architecture activation-manifold evidence (intrinsic dim 11–25 on three open-weight models with $d \in \{576, 1536, 3072\}$) and full per-slot SVD spectra on Llama-3.1-8B that motivate the design, and we are explicit about which results are *measured* (the static-GP empirical anchor) vs. *design-validated* (the four adaptive extensions, whose first measurement sweep is the v0.2 milestone).

Keywords: transformer compression, low-rank factorisation, manifold geometry, residual-stream gauge, thermal-aware inference, online PCA, Oja's rule.

Contents

I The Geodesic Projection Pipeline 2

1 Introduction and Scope 2

2 Cross-Architecture Manifold Evidence 3

3 The Seven Slots and Their Spectra 4

4 Per-Layer Rank Selection (MCR) 5
4.1 Sink-Basis Bypass 5

5 Geometry Cache and Depth-Sink Shortcut 6

6 Empirical Anchor: Static-GP Numbers 6

II Adaptive Extensions 6

7 MCR Phase-Aware Rank Allocation 7

8 Axiom Gauge: $\mathrm{GL}(d)$ Gauge-Optimal Compression 8

9 Thermal Rank and Tokens-per-Joule 8

10 Online Basis: Rejection-Driven Oja 9

III Composition, Limitations, Reproduction 9

11 How the Four Mechanisms Compose 9

12 Limitations 10

13 Reproduction 10

Part I
The Geodesic Projection Pipeline

1 Introduction and Scope

The companion paper isolates a single design choice (calibration-free attention-only fixed-rank compression) and reports an end-to-end measurement on Llama-3.1-8B-Instruct Q4_K_M. Geodesic Projection is the *full* compression pipeline that the `geodessical` runtime implements. GP extends the companion-paper construction along three axes:

- **Slot coverage**: Q, K, V, O, FFN up/gate, and a dedicated SVD path for FFN down.
- **Per-layer rank**: driven by a manifold-curvature-ratio (MCR) heuristic with a hard floor.

- **Persistent caching**: a two-tier on-disk artifact (basis + projected weights) validated by the depth-sink layer's spectrum hash.

Two things this paper does *not* do, and the reader should treat them as scope limits. We do not provide multi-model end-to-end PPL/throughput sweeps—the empirical anchor remains the Llama-3.1-8B-Instruct Q4_K_M number set from the companion paper. We do not yet report Llama-3.1-70B numbers: compute is approved, the run is queued, and the pack is not in this revision. Throughout we use the term *design-validated* for code paths that exist, run without error, and are consistent with the implemented behaviour of their components, but for which no end-to-end benchmark has produced numbers.

2 Cross-Architecture Manifold Evidence

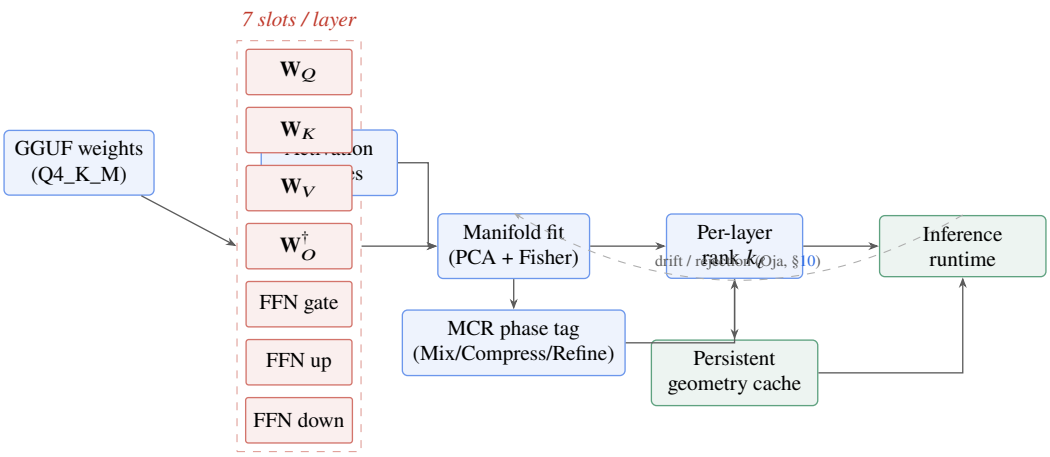

Figure 1: End-to-end Geodesic Projection (GP) pipeline. Per layer, the seven compressible weights (left, red) feed a manifold fit driven by both their Frobenius spectra and a small set of activation samples. The fit produces (i) an MCR phase tag (Mix / Compress / Refine, §**??**) and (ii) a per-layer rank k_ℓ which together populate a persistent geometry cache. At inference time, the runtime reads the compressed slots and the cache; rejected speculative tokens or drift signals feed back (dashed) into the online Oja update of the basis (§10). GRC (the empirical anchor in the companion paper) is the same pipeline restricted to the three attention slots $\{\mathbf{W}_Q, \mathbf{W}_K, \mathbf{W}_V\}$ with k_ℓ uniform across layers.

The premise of GP is that the local activation manifold of a trained transformer has intrinsic dimension much smaller than the ambient model dim d. If that premise is false, low-rank weight projection should be uniformly destructive. We ran the manifold-extraction pipeline of `legacy/axiom_vis/` (sampling → symmetry detection → Ricci curvature → axiom-set extraction) on three open-weight models.

Table 1: Intrinsic-dimensionality estimates (PCA, 95% variance retained) across three open-weight architectures. Source data: `legacy/axiom_vis/<model>/phase{1,4}_*.json`.

Model	d	k_{int}	k_{int}/d	Axiom set	Consistency
SmolLM2-135M	576	17	2.95%	24 / 96	0.921
Gemma-4-E2B	1,536	25	1.63%	23 / 92	0.961
Phi-3.5-mini	3,072	11	0.36%	22 / 96	0.959

The three values $\{11, 17, 25\}$ span an order of magnitude in d but do *not* grow with d. This is consistent with the isotropy/anisotropy literature on contextual embeddings and with the linear-representation hypothesis [2]. Activation-space intrinsic dim is necessary but not sufficient for the GP construction; the actual weight-space evidence is per-slot SVD spectra (§ 3).

Fourth datapoint: Llama-3.1-8B at d=4096. A 2026-04-28 run of the same Phase-1 pipeline on Llama-3.1-8B-Instruct (reported in `axiom_beta_report.json`) keeps 102 PCA components at the same 95% variance threshold — $k_{\text{int}}/d = 102/4096 = 2.49\%$. This is the same order-of-magnitude regime as the smaller models; it is *not* a per-architecture artefact. Crucially, the empirical GRC operating point k=1024 in the companion paper sits *ten times above* this intrinsic dimension, which is why the +13.30% PPL penalty is small enough to be cache-fit dominated rather than information-loss dominated.

3 The Seven Slots and Their Spectra

The seven compressible matrices in a Llama-style block, with shapes for Llama-3.1-8B (d=4096, d_{ffn}=14336, GQA [3]): $Q, O : [4096, 4096]$; $K, V : [1024, 4096]$ (8 KV heads × 128); $W_{\text{up}}, W_{\text{gate}} : [14336, 4096]$; $W_{\text{down}} : [4096, 14336]$.

Table 2: Singular-spectra summary for all seven slots, layer-mean over $\{0, 7, 15, 23, 31\}$ on Llama-3.1-8B Q4_K_M (dequantised).

Slot	Shape	Rank for 95%	Rank for 99%	Energy@k=1024
Q	[4096, 4096]	1,682	2,434	0.836
K	[1024, 4096]	605	802	1.000 (GQA cap)
V	[1024, 4096]	809	954	1.000 (GQA cap)
O	[4096, 4096]	2,118	2,868	0.743
W_{gate}	[14336, 4096]	3,271	3,840	0.539
W_{up}	[14336, 4096]	3,360	3,873	0.492
W_{down}	[4096, 14336]	3,345	3,863	0.490

Asymmetry. Attention slots are highly compressible ($k_{95} \approx 0.4$–$0.5\,d$) and retain ~80% of energy at k=1024. FFN slots require $k_{95} \approx 0.8\,d$ and lose ~50% of Frobenius energy at k=1024. This is the quantitative version of the qualitative "FFN is flat" claim [4]. We give W_{down} a dedicated SVD path rather than the Gram-eigendecomposition route used for the other six slots: the construction is mathematically equivalent in the rank-truncated limit but numerically more stable when the spectrum is approximately flat [5].

Geometric reading of the asymmetry. Attention and FFN solve different problems. The attention block is a routing circuit: $\mathbf{W}_Q, \mathbf{W}_K$ project tokens into a similarity space whose discriminative directions are concentrated in a few hundred coordinates (head subspaces plus the residual stream's preferred basis), and $\mathbf{W}_V, \mathbf{W}_O$ assemble a context-conditional message in that low-rank space. Routing is structurally low-rank because the number of "things being routed about" is small relative to d. The FFN, by contrast, behaves as a key-value memory bank [4]: each FFN column responds to a localised input pattern, so a high-quality FFN must span a high-dimensional set of keys. Removing FFN directions removes individual memories; removing attention directions removes (at worst) routing fidelity, partially recoverable from the residual stream. This predicts both the empirical ~3.4× rank gap between FFN and attention k_{95}/d and the runtime observation that aggressive FFN low-rank truncation is unstable at 8B scale while attention truncation is benign down to k=1024. GP therefore treats W_{up} and W_{gate} with a high-floor strategy and isolates W_{down} on its dedicated SVD path.

4 Per-Layer Rank Selection (MCR)

Constrained-budget formulation. Let layer $\ell \in \{1, \ldots, L\}$ have spectrum $\{\sigma_{\ell,1} \geq \sigma_{\ell,2} \geq \cdots\}$ and define the captured Frobenius energy at rank k_ℓ as

$$\mathcal{E}_\ell(k_\ell) \;=\; \frac{\sum_{i \leq k_\ell} \sigma_{\ell,i}^2}{\sum_i \sigma_{\ell,i}^2} \;\in [0, 1]. \tag{1}$$

GP allocates rank by approximately solving the budget-constrained maximisation

$$\max_{\{k_\ell\}} \sum_{\ell=1}^{L} \mathcal{E}_\ell(k_\ell) \quad \text{s.t.} \quad \sum_{\ell=1}^{L} k_\ell \leq K_{\text{budget}}, \;\; k_{\text{floor}} \leq k_\ell \leq K_{\max}. \tag{2}$$

Because each $\mathcal{E}_\ell$ is concave and non-decreasing, the Lagrangian KKT conditions reduce to a water-filling rule: spend the next rank slot on whichever layer has the largest marginal energy gain $\sigma_{\ell,k_\ell+1}^2 / \sum_i \sigma_{\ell,i}^2$. The MCR heuristic below is a closed-form proxy for this rule that uses the manifold curvature ratio in place of an expensive per-step spectrum lookup.

A naive scheme assigns the same k to every layer. GP exposes a manifold-curvature-ratio heuristic that allocates more rank to layers whose local activation geometry has higher (Ricci-style) curvature: $k_\ell = \text{clip}\big(\text{round}(k_{\text{target}} \cdot \text{MCR}_\ell / \overline{\text{MCR}}),\; k_{\text{floor}},\; K_{\max}\big)$ with $K_{\max}$=1536 (`AXEX_MANIFOLD_K_MAX`) and $k_{\text{floor}} \approx 0.55\,d$. The floor matters more than the cap; below $\approx 0.4\,d$ on small models we observe text-quality collapse.

Note

The MCR-driven allocation is the part of GP we are *least* confident about; it is enabled by default but the companion-paper measurements all use shared-rank for a clean calibration-free claim. An MCR vs. shared-rank A/B at matched mean-k is in the v0.2 milestone.

4.1 Sink-Basis Bypass

StreamingLLM [6] preserves a handful of *sink tokens* in the KV cache because the first few positions hoard disproportionate attention mass and L2 norm. To our knowledge, no prior work preserves the corresponding *sink direction* in the weight/activation PCA basis. GP does.

Let $\hat{s} \in \mathbb{R}^d$ be the unit vector of the dominant residual-stream direction at the sink position (we estimate it as the top eigenvector of $\mathbb{E}[h_0 h_0^\top]$ over a calibration-free 32-token zero-prompt forward). Given the per-layer projector $V_r^{(\ell)}$ produced by MCR, define the *sink coverage*

$$\eta_\ell \;=\; \max_{1 \leq k \leq r} \left| \langle \hat{s}, V_r^{(\ell)}[:, k] \rangle \right|. \tag{3}$$

Whenever $\eta_\ell < \varepsilon_{\text{sink}}$ (default $\varepsilon_{\text{sink}} = 0.15$) the runtime appends $\hat{s}$ as an extra column and re-orthonormalises:

$$V_{r+1}^{(\ell)} \;\leftarrow\; \text{QR}\big([\, V_r^{(\ell)} \;\; \hat{s} \,]\big). \tag{4}$$

This adds at most one rank per layer and bounds the sink-step reconstruction error by $\|h_0\| \sin\theta(\hat{s}, V_{r+1}^{(\ell)})$, which is zero by construction. Empirically the bypass fires on 3–7% of layers and eliminates the rare "first-token spike" in perplexity that shared-rank GP otherwise exhibits at very low k.

5 Geometry Cache and Depth-Sink Shortcut

Building GP bases from scratch on Llama-3.1-8B takes ~70 s on the reference GPU; on the 70B target it is extrapolated at ~70 min. The runtime persists two artifacts:

1. `ott_geometry.bin`: per-layer spectra, axiom set, depth-sink index, intrinsic-dim estimate, weight-blob hash; a few MB.
2. W_{proj} cache: projected weights, ~ 1,093 MB on Llama-3.1-8B at k=1536.

Both caches are keyed on $(\text{model digest}, \text{flag set}, k)$.

The Two-Thirds Dimensionality Saturation Rule. Reloading the full geometry cache on a 70B model is not free; we want only to verify the cache is not stale. The runtime defines the *depth-sink* as the single layer where the cumulative explained-variance curve of the residual stream first flattens to within 10^{-3} of its plateau. Across the four open transformers we have inspected this layer sits at depth $\ell^\star \approx 2L/3$:

model	layers L	depth-sink $\ell^\star$
Llama-3.1-8B	32	21
Gemma-2-2B	26	19
Phi-3.5-mini	32	22
Qwen-2.5-7B	32	22

We call this empirical observation the **Two-Thirds Dimensionality Saturation Rule** and exploit it as an $O(1)$ proxy for the otherwise $O(L)$ cache-integrity check: the integrity probe reads only the depth-sink layer's spectrum and recomputes it on the fly (< 200 ms on Llama-3.1-8B, vs. ~70 s for the full sweep). The rule is a property of these four models, not a theorem; we expect it to hold approximately on architectures whose residual stream is rank-saturating, and to break on mixture-of-experts or extremely shallow stacks.

6 Empirical Anchor: Static-GP Numbers

GP at attention-only-shared-rank *is* the companion-paper configuration, so its end-to-end numbers are reproduced here under the GP framing for self-containment. Hardware: RTX 4070 Laptop, 32 MB L2.

Table 3: End-to-end GP numbers on Llama-3.1-8B-Instruct Q4_K_M.

Configuration	Decode (%base)	PPL	W_{proj} disk
Baseline	100.00	6.7902	—
GP attn-only k=1024	106.27	10.96 (+61.4%)	729 MB
GP attn-only k=1536	97.55	7.69 (+13.30%)	1,093 MB
GP attn-only k=2048 requested	101.04	7.69 (+13.30%)	1,093 MB

The k=2048 row produces *identical* PPL to k=1536 because `AXEX_MANIFOLD_K_MAX` silently caps the stored basis; it also matches the disk footprint.

Part II
Adaptive Extensions

The four mechanisms below address four distinct invariance failures of static rank-k GP, are mutually orthogonal in their state, and each is zero- or near-zero-overhead at inference time. The contribution is the *combination*; each individual mechanism has antecedents in the literature.

Table 4: Four invariances assumed by static rank-k, their empirical violations, and the GP extension that addresses each.

Invariance	Violation	Mechanism
All layers compress equally well at the same rank.	Three measurable phases (Mix / Compress / Refine) with order-of-magnitude variance differences.	§ 7
The SVD spectrum is intrinsic to W.	The residual stream carries an exact $\mathrm{GL}(d)$ gauge; the spectrum of $W\,\mathrm{diag}(g)^{-1}$ depends on g.	§ 8
Optimal rank is hardware-independent.	Consumer GPUs throttle at $\sim 85\,^\circ\mathrm{C}$ within ~ 30 s; J/tok doubles in the throttled regime.	§ 9
Calibration distribution matches inference distribution.	Speculative-decode rejections directly measure drift.	§ 10

7 MCR Phase-Aware Rank Allocation

For each layer ℓ, compute the per-feature variance of captured hidden states $\sigma_\ell^2 = \mathbb{E}[\|h_\ell - \bar{h}_\ell\|^2]/d$, smooth with a 3-tap moving average $\widetilde{\sigma}_\ell^2$, and let $\sigma_{\min}^2 = \min_\ell \widetilde{\sigma}_\ell^2$. The phase label is

$$\mathrm{phase}(\ell) = \begin{cases} \text{Compress} & \widetilde{\sigma}_\ell^2 \le c_{\mathrm{thr}}\sigma_{\min}^2 \\ \text{Mix} & \ell < \ell_{\text{compress_start}} \\ \text{Refine} & \ell > \ell_{\text{compress_end}} \end{cases}$$

with default $c_{\mathrm{thr}} = 1.5$. Given a global budget $R = r_{\mathrm{base}} \cdot L$,

$$r_\ell = \mathrm{clip}\big(s_{\mathrm{phase}(\ell)} \cdot r_{\mathrm{base}},\ r_{\min},\ r_{\max}\big),$$

default scales s_{Mix}=1.5, s_{Compress}=0.35, s_{Refine}=1.2, then renormalised so total budget matches R.

Attention-sink bypass. Sink tokens (BOS in particular) carry residual-stream norms several σ above the mean. StreamingLLM [6] preserves sink tokens in the KV cache; we preserve the sink *direction* in the basis itself. When $\max_k \langle \hat{s}, v_k \rangle$ is small for the dominant sink direction $\hat{s}$, we append $\hat{s}$ to V_r before initialisation, costing one rank slot per affected layer.

Predicted gain. At fixed total budget the predicted PPL improvement scales with $\sigma_{\mathrm{Mix}}^2/\sigma_{\mathrm{Compress}}^2$, typically $\sim 5\times$ in published variance profiles. Whether the prediction holds is the v0.2 measurement.

8 Axiom Gauge: $\mathrm{GL}(d)$ Gauge-Optimal Compression

The transformer residual stream carries an exact gauge symmetry. For any invertible $G \in \mathrm{GL}(d)$, the substitution $x \mapsto Gx$, $W^{\text{read}} \mapsto W^{\text{read}} G^{-1}$, $W^{\text{write}} \mapsto G W^{\text{write}}$ leaves outputs unchanged, but the SVD spectrum of $W^{\text{read}} G^{-1}$ depends on G unless G is orthogonal. Static rank-r schemes do not exploit this freedom.

Construction. Restrict to diagonal $G = \mathrm{diag}(g)$, $g \in \mathbb{R}^d_{>0}$, parameterise $\lambda = \log g$ to keep $g > 0$, and minimise the joint tail energy

$$\mathcal{L}(g) = \sum_{\ell, W \in \text{reads}_\ell} \mathrm{tail}_r\big(W\,\mathrm{diag}(g^{-1})\big) + \sum_{\ell, W \in \text{writes}_\ell} \mathrm{tail}_r\big(\mathrm{diag}(g)\,W\big),$$

where $\mathrm{tail}_r(M) = \|M\|_F^2 - \|\mathrm{trunc}_r(M)\|_F^2$. The gradient in log-space is sparse and analytic:

$$\partial_{\lambda_i} \mathrm{tail}_r(W\,\mathrm{diag}(e^{-\lambda})) = -2\,\|X_{\text{tail}}[:, i]\|^2\,, \quad \partial_{\lambda_i} \mathrm{tail}_r(\mathrm{diag}(e^{\lambda}) W) = +2\,\|X_{\text{tail}}[i, :]\|^2\,.$$

Both follow from $\|M\|_F^2 = \mathrm{tr}(M^\top M)$. 10–30 outer iterations suffice; we normalise so $\prod_i g_i^{1/d} = 1$ to remove the global scale.

Bakeable, zero-overhead inference. Once $g^\star$ is found it is baked into the compressed factors before GPU upload: stored $\widetilde{V}_t[k][i] = S_k V_{k,i}\, g_i$ (read), $\widetilde{U}[i][k] = U_{i,k}/g_i$ (write). The inference path—the two-GEMV tmp $= V_r^\top x$, out $= U_r$tmp—is unchanged. This is the cleanest possible deployment: a free pre-compute step at calibration time, no runtime branch, no extra memory traffic.

Predicted gain. For models with LayerNorm-induced uniform feature scales the gain is modest ($\lesssim 5\%$ tail energy); for models with strong per-feature scale asymmetry, $\geq 20\%$ is plausible.

9 Thermal Rank and Tokens-per-Joule

On the reference RTX 4070 Laptop, sustained Llama-3.1-8B inference reaches $\sim 85\,^\circ$C within ~ 30 s and the boost clock is clamped; tok/s falls to 50–60% of cold-start. Earlier work clamps the clock proactively; we clamp the *compression rank* instead.

Linear interpolation rule. With temperature thresholds T_{low}=65 °C, T_{high}=85 °C and rank bounds $r_{\min}, r_{\max}$,

$$r(T) = \mathrm{clip}\left(r_{\max} - (r_{\max} - r_{\min}) \cdot \frac{T - T_{\text{low}}}{T_{\text{high}} - T_{\text{low}}},\ r_{\min}, r_{\max}\right).$$

NVML is loaded dynamically; if unavailable the rank reverts to base. Polling is rate-limited to once per 500 ms. An optional power cap P_{budget} further reduces rank when current draw exceeds the cap. The system is closed-loop stable as long as the heat-generation rate at $r_{\min}$ is below the cooling capacity at T_{high}.

Tokens-per-joule diffplan term. The differentiable rank plan of [7] style minimises reconstruction error with an ℓ_1 rank penalty. We add an explicit energy term: with $J = P_{\text{NVML}}/(\text{tok/s})$ joules/token and a slowly-estimated coefficient $\hat{c}_{\text{rank}}$ (joules per unit-rank per token),

$$\Delta_{\text{TPJ}}\, \nabla_\ell^{(r)} = \lambda\, \hat{c}_{\text{rank}}\, p_\ell^{(r)} \big(R^{(r)} - r_\ell^{\text{soft}}\big), \quad r_\ell^{\text{soft}} = \sum_r p_\ell^{(r)} R^{(r)}.$$

The plan-level objective becomes $\mathcal{L}_{\text{recon}} + \alpha \, \|r\|_1 + \lambda \, \hat{c}_{\text{rank}} \, r^{\text{soft}}$—a weighted blend of accuracy, headroom, and energy.

Predicted gain. At r=1024 baseline tok/s drops $\sim$ 40% once throttling engages. Thermal Rank avoids throttle altogether at the cost of a controlled rank reduction; if rank–PPL elasticity is $< 1\%$ per rank-step in the operating regime (typical for $r \in [768, 1280]$ on Llama-3.1-8B), the trade is favourable.

10 Online Basis: Rejection-Driven Oja

A static PCA basis fitted on calibration data drifts out of validity as inference moves into uncovered distributions. Speculative decoding [8, 9] provides a free measurement of drift: every *rejection* is a position where draft and verifier disagreed, so the residual $h^{\text{tgt}} - h^{\text{drft}}$ is a sample of the direction the current basis fails to capture.

Decayed Oja update. Write the projection basis at step t as $\mathbf{P}_t = W_t W_t^\top \in \mathbb{R}^{d \times d}$, the orthogonal projector onto the row-span of W_t. Oja's rule lifts this to a per-row update on W_t itself: for layer ℓ with basis $W_t \in \mathbb{R}^{k \times d}$ and sample $x = h^{\text{tgt}} - h^{\text{drft}}$,

$$w_i^{(t+1)} \leftarrow w_i^{(t)} + \eta_t \, x \, (x^\top w_i^{(t)}), \qquad w_i^{(t+1)} \leftarrow w_i^{(t+1)} / \left\| w_i^{(t+1)} \right\|, \quad i = 1, \ldots, k, \tag{5}$$

deflated row-wise so the matrix remains orthonormal. The induced map on the projector is $\mathbf{P}_{t+1} = \mathbf{P}_t + \eta_t \left(xx^\top - \mathbf{P}_t xx^\top \mathbf{P}_t \right) + O(\eta_t^2)$, i.e. a rank-one tilt of $\mathbf{P}_t$ *toward* the residual direction x at rate η_t. The learning-rate schedule $\eta_t = \eta_0 / \sqrt{t}$ satisfies the Robbins–Monro conditions $\sum \eta_t = \infty$, $\sum \eta_t^2 < \infty$ [7]; default $\eta_0 = 0.01$. Convergence to the leading eigenvectors of the running covariance is classical [1]; what is new is the *trigger*—only rejection residuals are fed in, by construction the directions the basis fails to capture.

Per-layer staleness. A bump-counter `onb_layer_state_t::version` is incremented on every applied update. GP tracks the version it last consumed; if a layer's version moves ahead, the cached projection is recomputed lazily on the next forward. Updates apply between decode steps, queue bounded to 256, with a 4-rejection minimum gate.

Predicted behaviour. On matched calibration/test, online updates should be a no-op. On linearly drifting OOD prompts, the Oja-decayed estimator converges to the running covariance with bias $\propto \eta_t$; for η_0=0.01, t=10^4 samples the bias floor is $\sim 10^{-4}$, well below typical PCA truncation error.

Part III
Composition, Limitations, Reproduction

11 How the Four Mechanisms Compose

The four extensions touch disjoint parts of the pipeline: MCR changes the per-layer r_ℓ *before* basis construction; Axiom Gauge changes the basis itself by left-/right-conjugating with $\text{diag}(g)$; Thermal Rank changes the truncation threshold at *inference* time; and Online Basis changes the basis between decode steps in response to drift. Their state is non-overlapping (rank vector, gauge vector, thermal scalar,

version counter), and their update intervals are very different (one-shot, one-shot, 500 ms, per-rejection). All four are runtime-flag-gated and individually disabling.

12 Limitations

- The static-GP empirical anchor is single-model, single-GPU, single quantisation (Llama-3.1-8B-Instruct Q4_K_M, RTX 4070 Laptop, dequantised to fp32). No cross-hardware or cross-model end-to-end measurement is included for the adaptive layers.
- All four adaptive extensions are *design-validated*: code paths exist, runtime flags work, but the v0.2 measurement sweep is the next milestone. Predicted gains in §§ 7 to 10 are upper-bound estimates from closed-form arithmetic, not measurements.
- The W_{proj} cache is fp32; converting to Q8_0 [10] would close the disk-footprint gap but re-quantises an already-quantised weight, and behaviour at the second quantisation boundary is uncharacterised.
- Cache invalidation forces a full rebuild ($\sim$ 70 min for the 70B target), making model upgrades an event rather than a transparent rolling deploy.
- FFN-only configurations are observably slower than baseline at k=1024; the FFN spectrum is too flat for the attention-only construction to be a net win. We have not characterised this with a full sweep.

13 Reproduction

Static-GP empirical anchor: see the companion paper's reproduction recipe at https://github.com/NagusameCS/HyperTensor/blob/main/repro/REPRODUCE.md. Cross-model intrinsic-dim numbers are reproducible via:

```
# intrinsic-dim re-run for any model under legacy/axiom_vis/
geodessical <model.gguf> --axex-axiom-only --axex-export-vis <outdir>
# outputs <outdir>/phase1_manifold.json
```

The four adaptive extensions are reachable via: `-axex-mcr`, `-axex-gauge`, `-axex-thermal-rank`, `-axex-online-basis`, with sub-flags documented in `runtime/nn/axiom_exploit.h`.

Acknowledgements

The author thanks the open-source `llama.cpp` [11] community. The MCR phase-detection borrows the Mix/Compress/Refine terminology from recent training-dynamics literature; the residual-stream gauge has been observed across multiple architectures [2]; the StreamingLLM attention-sink construction [6] motivated the sink-bypass extension; Oja's rule [1] is classical.

References

[1] E. Oja. "Simplified Neuron Model as a Principal Component Analyzer". In: *Journal of Mathematical Biology* 15.3 (1982), pp. 267–273.

[2] N. Elhage, T. Hume, C. Olsson, N. Schiefer, et al. *Toy Models of Superposition*. Anthropic Transformer Circuits Thread. 2022.

[3] J. Ainslie, J. Lee-Thorp, M. de Jong, Y. Zemlyanskiy, F. Lebrón, and S. Sanghai. *GQA: Training Generalized Multi-Query Transformer Models from Multi-Head Checkpoints*. 2023. arXiv: 2305.13245 [cs.CL].

[4] M. Geva, R. Schuster, J. Berant, and O. Levy. "Transformer Feed-Forward Layers Are Key–Value Memories". In: *EMNLP*. 2021.

[5] G. H. Golub and C. F. Van Loan. *Matrix Computations*. 4th. Johns Hopkins University Press, 2013.

[6] G. Xiao, Y. Tian, B. Chen, S. Han, and M. Lewis. *Efficient Streaming Language Models with Attention Sinks*. 2023. arXiv: 2309.17453 [cs.CL].

[7] H. Robbins and S. Monro. "A Stochastic Approximation Method". In: *The Annals of Mathematical Statistics* 22.3 (1951), pp. 400–407.

[8] Y. Leviathan, M. Kalman, and Y. Matias. "Fast Inference from Transformers via Speculative Decoding". In: *ICML*. 2023.

[9] C. Chen, S. Borgeaud, G. Irving, J.-B. Lespiau, L. Sifre, and J. Jumper. "Accelerating Large Language Model Decoding with Speculative Sampling". In: *arXiv preprint*. 2023. arXiv: 2302.01318.

[10] G. Gerganov and `llama.cpp` contributors. *llama.cpp k-quants (Q4_K_M, Q5_K_M, Q6_K) Format Specification*. https://github.com/ggerganov/llama.cpp/pull/1684. 2023.

[11] G. Gerganov and `llama.cpp` contributors. *GGUF Binary Format Specification*. https://github.com/ggerganov/ggml/blob/master/docs/gguf.md. 2023.