Voice Controlled Smart Home Automation System Using Bluetooth Technology

Md. Sajjad Hossain Shawon
Department of EEE
Bangladesh University of Business and Technology
Dhaka, Bangladesh
sajjad.shawon3@gmail.com

Chinmoy Das
Department of EEE
Khulna University of Engineering and Technology
Khulna, Bangladesh
chinmoyd299@gmail.com

Md. Tabil Ahammed
Department of EEE
Bangladesh University of Business and Technology
Dhaka, Bangladesh
ahtabil53@gmail.com

Gobinda Biswas
Department of EEE
Bangladesh University of Business and Technology
Dhaka, Bangladesh
gobindakumar218@gmail.com

MD. Shaurov Mia
Department of EEE
Bangladesh University of Business and Technology
Dhaka, Bangladesh
Shaurovkhan1@gmail.com

Emima Akter Eva
Department of EEE
Bangladesh University of Business and Technology
Dhaka, Bangladesh
evaemima49@gmail.com

Md. Nazmus Sakib
Department of EEE
Bangladesh University of Business and Technology
Dhaka, Bangladesh
md.shakib35@gmail.com

2021 4th International Conference on Recent Trends in Computer Science and Technology (ICRTCST) | 978-1-6654-6633-2/22/$31.00 ©2022 IEEE | DOI: 10.1109/ICRTCST54752.2022.9781967

***Abstract* — Innovation is not a destination; it is a journey to explore. Smart home appliances are being introduced into our day-to-day lives and they have a vast future opportunity. To control these appliances, people are looking for new technologies. Bluetooth is a convenient way of wireless communication within a short distance. In this research work, an Android application-based Bluetooth-controlled smart home automation system has been introduced. A programmable Arduino Uno is the controlling heart that works based on programming commands. A Bluetooth module (HC-05) is used for wireless connectivity and a relay circuit for switching. An interactive Android graphical user interface (GUI) has been developed by adding touch and voice command features for those who are blind and unable to move easily. A speech recognition feature has also been added to the Android application. English and Bangla are two languages that have been integrated into the programming so that English is taught and local Bengali people can easily control home appliances by using voice command.**

Keywords — Home automation, control smart home, Bluetooth controlled, voice controlled, Arduino Uno, Bluetooth Module (HC-05).

I. Introduction

Nowadays smart home is a trending technology that is developing constantly. To enhance the quality of human living, home networking is integrated with many new technologies. Mainly two types of home networking classifications are wiring and wireless systems [1]. In wireless communication, many systems are working on smart home automation like Wi-Fi-based, Web service, Cloud-Based, Email Based, Using Dual Tone Multi-Frequency (DTMF), GSM Based and Bluetooth controlled etc. [2]. All of them have the advantage and disadvantage too. Home automation using Bluetooth connectivity is becoming more popular for easily accessible network, low cost and low disturbance. The tendency of using Bluetooth is being increased in home automation day after day. Bluetooth is an unlicensed frequency band of industrial, scientific and medical (ISM) which is operating at 2.4GHz. Worldwide many developers are meeting novel smart systems using Bluetooth Low Energy (LE) and Bluetooth Classic radios. Despite having so many advantages, the major drawback of using Bluetooth connectivity is it works in a short-range distance which is typically less than 10meters (33 feet) and depending on the Bluetooth device maximum data rate could reach up to 3Mbps [3]. Along with the development of modern science, having a smartphone becomes a handy thing all around the world. In an android system, different types of applications are developing in the Java programming language. On the other hand, natural language processing is working with voice command to control surrounding things [4]. In our busy lives, home automation systems are playing a vital role. By using home automation, many appliances can be controlled like light, door, fan, water pump etc. Bluetooth-controlled home automation is not only the best technology, but it also

Authorized licensed use limited to: Khulna Univ of Engineering & Technology - KUET. Downloaded on May 09,2024 at 14:34:50 UTC from IEEE Xplore. Restrictions apply.

reduces human effort. People who are disabled or blind may benefit greatly from Bluetooth-controlled home automation. These systems save both time and labor [5].

To make the smart-home automation system more efficient and reliable several related studies have been done. Arduino and a cell phone were used to control the appliances. A python script was written for the cell phone and was designed for the Symbian Operating System platform which becomes obsolete OS in this 21st century [6]. Two years later Naresh and two others proposed a home automation and security system using ARM9 where they used ARM7 LPC2148 board. Communication takes place between ARM7 and ARM9 with a Bluetooth device [7]. Khiyal and others used the Global System for Mobile communications (GSM) [6]. On the other hand, Teymourzadeh proposed a GSM modem-based home controlling system. The drawback of the system was hard to remember certain codes to perform certain action also the graphical user interface (GUI) was not present in the work [2]. The work was based on the people who are suffering from quadriplegia or paraplegia (those are not able to move) by recognizing of voice command and a relay circuit drives by the Arduino [8]. Ramlee and others worked on the home system using the Android application. The system worked by giving remote access to elderly and disabled people but for blind people voice was not implemented [9]. Yavuz et al. used a pin-check algorithm in PIC-based remote controlling system [10]. Appliances controlled using PC and Bluetooth. However, the system was not able to control by phone [11]. Kannapiran and Chakrapani proposed home automation using Bluetooth and Arduino. The result and discussion part were not clear [12]. Yang et al. introduced a wireless sensor network (WSN) with home automation using CC2430 chip design [13].

At first, the study of the background of Bluetooth and home automation Technology and related works have already been discussed. Therefore, the proposed method is discussed in Section II. Afterward, in section III the methodology is explained in detail. In Section IV, the result of the system and discussion is given. Finally, in section V the conclusion is added.

II. Proposed Method

This paperwork proposes cost-effective smart home automation using Bluetooth connectivity. A user-friendly interface android application is designed, which transmits data with a constant rate of 9600 bauds. The data received by the Bluetooth module (HC-05) and passes to Arduino Uno. The program file of the Arduino Uno checked whether the command exists or not. If the command is valid, then it activates the relay driver and turns on the load, "Fig. 1" illustrates this point.

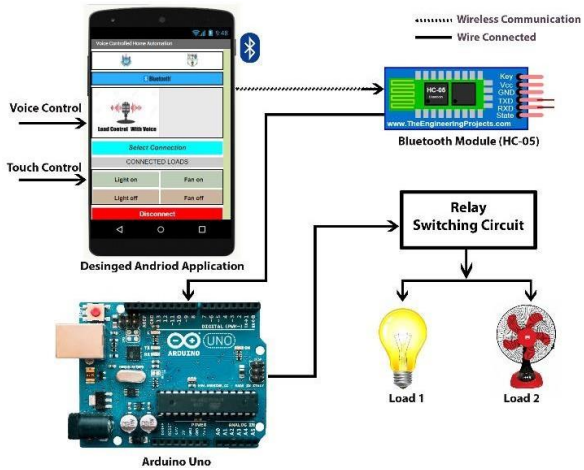

Fig. 1. System diagram of Automation System for Home

III. Methodology

The suggested solution uses data from an Android handset to regulate power demands. To manage electricity loads, a mobile or tablet Android software must be loaded. It is possible to regulate the electrical loads using this Android application, which communicates with the Bluetooth module. In this project, 2.4GHz Bluetooth wireless technology is utilized.

A. Components Reequipments

For the circuit development used Arduino Uno (ATMGA328p-PU), Bluetooth module (HC-05), 1N4007 diode, 2N2222 transistor, relay, load (Fan, Light) and connecting wires.

For the software simulation and circuit design used Proteus 8 professional version 8.11, Arduino Uno version 1.8.5 used to program the Arduino microcontroller and finally MIT App Inventor used to build the desire application.

B. System Design

For simplicity and better understanding, two loads of light and fan are used in this paper. Multiple loads can be implemented in the same way. The system is designed in Proteus 8 professional which is depicts in “Fig. 2”.

Authorized licensed use limited to: Khulna Univ of Engineering & Technology - KUET. Downloaded on May 09,2024 at 14:34:50 UTC from IEEE Xplore. Restrictions apply.

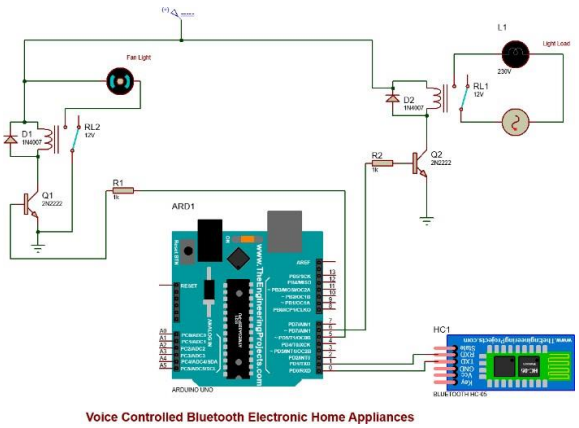

Fig. 2. Circuit diagram of the system.

C. *Set up Bluetooth module and Arduino Uno*

In simulation, communication port or serial port have to be the same as the Bluetooth module (HC-05) Figure 3 depicts this. If not, communication will not happen.

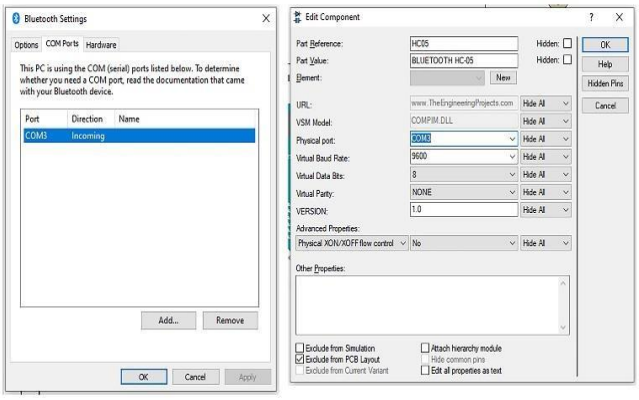

Computer

In Bluetooth Module

Fig. 3. Bluetooth Serial port set up for communication.

A program was written in Arduino Uno 1.8.5. A hex file is produced in the output file which contains the programmable logic of the microcontroller. Hex file directory is used in Arduino Uno program file settings shown in "Fig. 4".

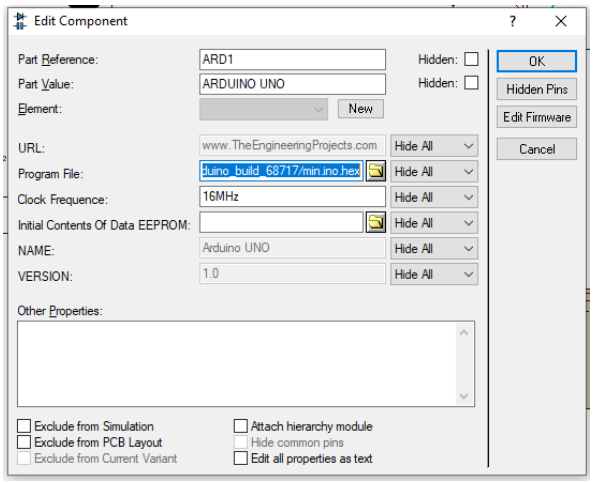

Fig. 4. Arduino Uno program file set up.

D. *Application Design*

An Application is designed as shown in "Fig. 5" for the user-friendly interface to control the load. Voice and touch both control features are added. MIT App Inventor is a free android application-making platform that is used in this research work.

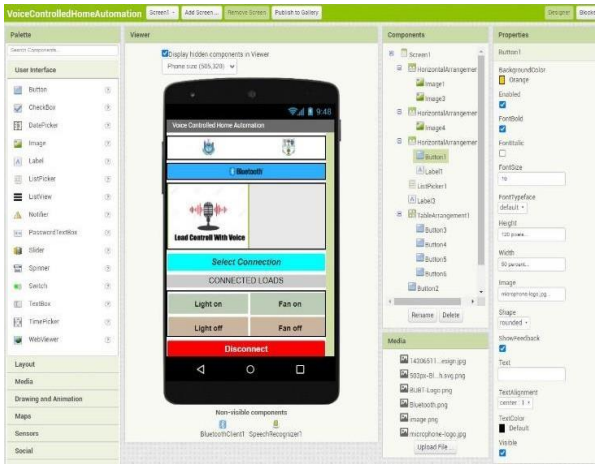

Fig. 5. Application front-end design.

The main purpose to use MIT App Inventor is to be cost- effective and this platform doesn't need to learn java program or PHP server-side scripting language to build an application. Built-in blocks are available. By connecting blocks each element works properly. The logic block code is shown in "Fig. 6".

Authorized licensed use limited to: Khulna Univ of Engineering & Technology - KUET. Downloaded on May 09,2024 at 14:34:50 UTC from IEEE Xplore. Restrictions apply.

Fig. 6. Application backend logic implementation.

E. *Flow Chart of the system*

Flow chat has divided into 2 parts one is for the android application shown in “Fig. 7”. In the first part the application working procedure has given. Here, the Application send the data by using voice or touch control command.

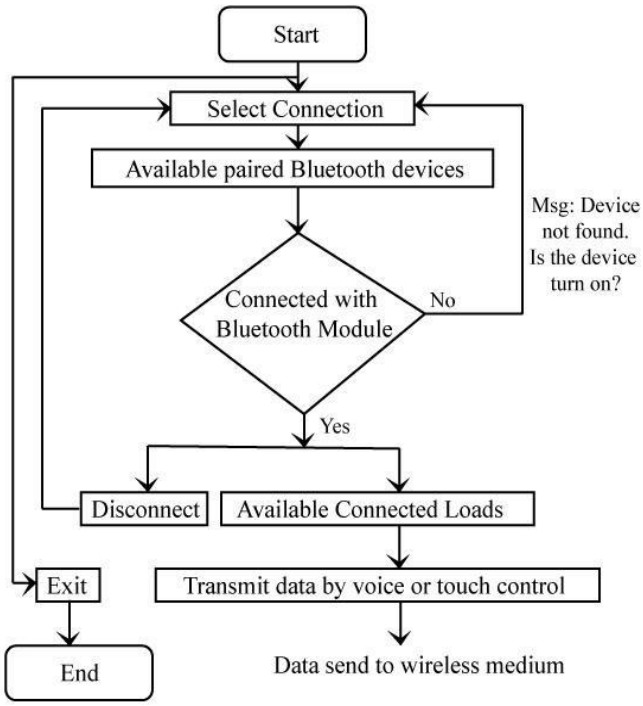

Fig. 7. Flow chart of the designed application.

The hardware system's flow diagram is depicted in "Fig." 8. Transmitted data received by the Bluetooth module (HC-05). Arduino Uno program checks the command is valid or not and sends it to the relay circuit and finally the load turns on according to the command.

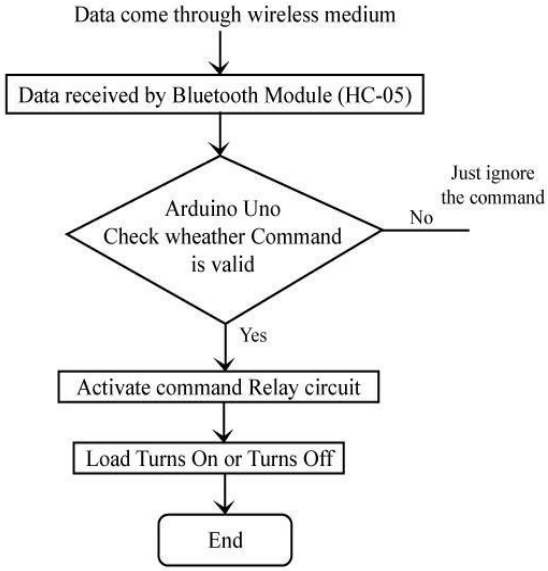

Fig. 8. Flow chart of the hardware system.

IV. Result and Discussion

The system is worked successfully. The work has been testified in many times. But no failure is detected. First, the application voice or touch command transmits the data shown in “Fig. 9” which is received by the Bluetooth module.

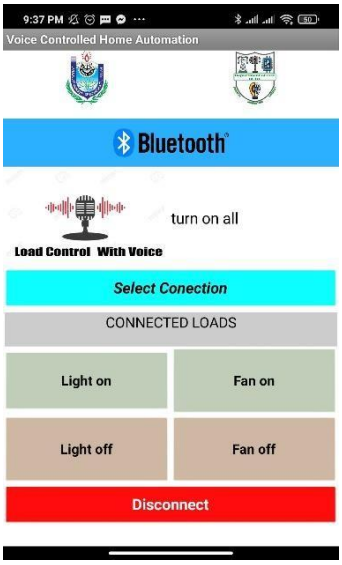

Fig. 9. Voice command is sending through the application

The Voice is correctly recognized by the system. For communication testing the transmitted data here received by the Arduino software serial port is shown in “Fig. 10. For simplicity one line of the voice command is shown below.

Authorized licensed use limited to: Khulna Univ of Engineering & Technology - KUET. Downloaded on May 09,2024 at 14:34:50 UTC from IEEE Xplore. Restrictions apply.

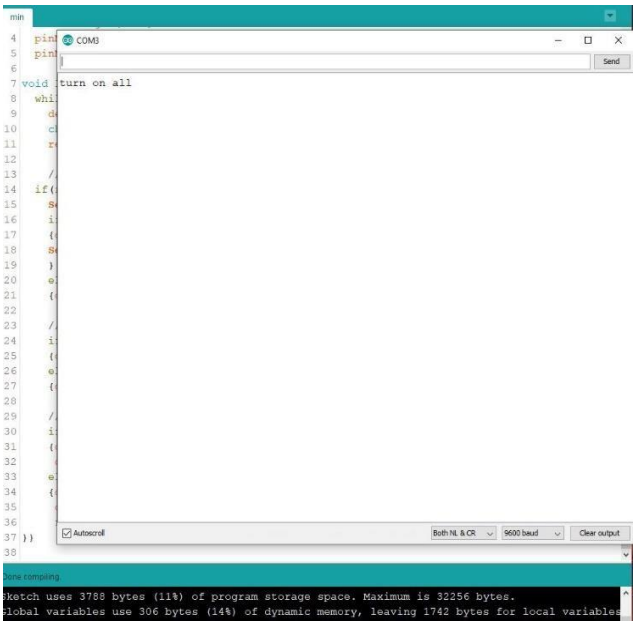

Fig. 10. Serial monitor received the application voice command successfully

Two loads are used in this system for simplicity and better understanding which are light and fan. The loads are connected to the relay circuit for relay operation. The Arduino Uno which is programmed previously checked whether the application's voice command is valid or not. In this work, mainly both English and Bengali twelve types of voice commands are used as input. The command "turn on light" used for switch on the light load and the command "turn off light" used for switch off the light load. Similarly, for fan the command "turn on fan" and "turn off fan" is used to switch on and off the fan-load that is shown in "TABLE I".

TABLE I. LOAD ACTION WITH VOICE COMMAND

Voice command	Arduino Uno	Relay	Action
Turn on fan	Digital pin 5 High	Relay 2 ON state	Fan Load ON
Turn off fan	Digital pin 5 Low	Relay 2 OFF state	Fan Load OFF
Turn on light	Digital pin 6 High	Relay 1 ON state	Light Load ON
Turn off light	Digital pin 6 Low	Relay 1 OFF state	Light Load OFF
Turn on all	Digital pin 5,6 High	Relay 1,2 ON state	All Loads ON
Turn off all	Digital pin 5,6 Low	Relay 1,2 OFF state	All Loads OFF

The command "turn on all" is used to turn on all loads that are available in a house and similarly "turn off all" is used to turn off all the available loads. Moreover, the Bengali Language is also testified for local Bengali people. To use the Bengali language, smart phone's keyboard configuration has to be set in Bangla. The system can be implemented with multiple loads. Smart home automation has a lot of future scopes. Machine learning is becoming the future aspect of solving real-life problems. Artificial intelligence (AI) is taking place all around the world. Even though the system already has been implemented using the Internet of Things (IoT). But due to poor internet connectivity and frequent internet interruption, this will not be efficient in many areas.

In the future, this research can be further modified with multiple loads and AI can be integrated with voice recognition so that system can analyze and understand the different meanings of voice command and control load more efficiently. Machine learning focuses on learning from the data. By training, testing and using validation a machine learning model can be implemented with this research work.

CONCLUTION

Voice Controlled Bluetooth Home Automation is a sustainable, cost-effective project. Nowadays almost every single family has access to smartphones. This research work has mainly been designed for those who are older-aged and unable to move easily. The aim of the research work is achieved. The proposed system has given a better output. The work has successfully run without any disturbance. No issues were found during the test period. However, it is recommended to use a quiet place to get accurate voice recognition.

FUTURE SCOPE

The utilization of different sensors to help in home automation would be a future upgrade to this planned voice-controlled system. Proximity and ambient light sensors might be used to detect activity in a specific space and run lights, fans, and air conditioners, among other things, when a person is close. These may be paired with a temperature sensor, such as an Infrared thermometer, to monitor temperature, humidity, and moisture and change the temperature of the air conditioner appropriately. With the use of automated alarms, security might be efficiently implemented in a smart house. This technology, although mainly meant to decrease human effort, will be highly advantageous to the old and physically challenged individual. It will enable them to conveniently operate their home equipment without the extra strain or effort of moving about. It finds use in a broad variety of areas owing to the inexpensive cost of the materials used in its fabrication and

Authorized licensed use limited to: Khulna Univ of Engineering & Technology - KUET. Downloaded on May 09,2024 at 14:34:50 UTC from IEEE Xplore. Restrictions apply.

additional cost reduction if the device is brought to market.

REFERENCES

[1] Purao, Sandeep, Haijing Hao, and Chenhang Meng. "The Use of Smart Home Speakers by the Elderly: Exploratory Analyses and Potential for Big Data." Big Data Research 25 (2021): 100224.

[2] Kallenos, Petros. "Develop a marketing plan for Nedeco Electronics Ltd-Cockpit a Smart Home Solution." (2021)..

[3] Eridani, Dania, Adian Fatchur Rochim, and Faiz Noerdiyan Cesara. "Comparative Performance Study of ESP-NOW, Wi-Fi, Bluetooth Protocols based on Range, Transmission Speed, Latency, Energy Usage and Barrier Resistance." 2021 International Seminar on Application for Technology of Information and Communication (iSemantic). IEEE, 2021.

[4] Manikalyan, Balasa, Ravuru Venkata Lokesh, and Merugumala Jaswanth. "Software Design of a Voice Controlled Home Automation System." International Journal of Engineering and Applied Physics 1.2 (2021): 199-204.

[5] C. Goswami, V. Hunjan, A. Kasture and V. Giake, "A CONCEPTUAL STUDY OF HOME AUTOMATION BASED ON BLUETOOTH USING VOICE CONTROL," International Journal of Scientific Development and Research (IJSDR), Vol. 3, Issue. 5, pp. 307-309, 2018.

[6] Anitha, G., et al. "Bluetooth Based Home Automation and Security System." Journal of Physics: Conference Series. Vol. 1916. No. 1. IOP Publishing, 2021.

[7] Ritesh Kumar Thakur, Rajesh Kumar Tiwari (2020), 'Security On IoT: A Review", Int. J. of Electronics Engineering and Applications, Vol. 8, No.2, July-Dec 2020, pp-40-48, DOI-10.30696/IJEEA.VIII.II.2020.40.48..

[8] Yatnalkar, Geetanjali, Vidya Gogate, and Vinit Kotak. "Investigation on the Real Time Appliance Management and Control System for Smart Home/Office Automation." Current Approaches in Science and Technology Research Vol. 9 (2021): 120-134.

[9] Prakash, Nayan Thara, et al. "An Android-Based Smart Home Automation System in Native Language." Advances in Computing and Network Communications. Springer, Singapore, 2021. 79-88.

[10] MING AI and HAIQING LIU, (2021), "Privacy-preserving Of Electricity Data Based On Group Signature And Homomorphic Encryption" Int. J. of Electronics Engineering and Applications, Vol. 9, No. 2, pp. 11-20, DOI 10.30696/IJEEA.IX.I.2021.11-20..

[11] Dash, Shruti, and Pallavi Choudekar. "Home Automation using Smart Devices and IoT." 2021 9th International Conference on Reliability, Infocom Technologies and Optimization (Trends and Future Directions)(ICRITO). IEEE, 2021.

[12] Osman Goni, (2021), "Implementation of Local Area Network (lan) And Build A Secure Lan System For Atomic Energy Research Establishment (AERE)" Int. J. of Electronics Engineering and Applications, Vol. 9, No. 2, pp. 21-33, DOI 10.30696/IJEEA.IX.I.2021.21-33..

Authorized licensed use limited to: Khulna Univ of Engineering & Technology - KUET. Downloaded on May 09,2024 at 14:34:50 UTC from IEEE Xplore. Restrictions apply.