**OEM MANUAL**

6110 Blue Circle Dr
Minnetonka MN 55343
612 941 6500
Toll Free 800-328-4672

# DATA 100

30 Plan Way
Warwick Rhode Island 02886
401/738-4500

## SERIES 1400

## IMPACT LINE PRINTERS

DATA 100
CORPORATION

# TECHNICAL MANUAL

## SERIES 1400

## IMPACT LINE PRINTERS

Data contained herein may not be copied in whole or in part without written permission of DATA 100

DATA 100
CORPORATION

| DATE CODE | REVISION LEVEL | ACTION |
|---|---|---|
| 7310,A,B,D | O | Manual Originated - 10/73 |
| 7402 | A | Pages Revised - 2/74 |
| 7405 | B | Pages Revised - 5/74 |
| 7407 | C | Pages Revised - 7/74 |
| 7409, A | D | Pages Revised - 9/74 |
| 7411 | E | Pages Revised - 11/74 |
| 7503 | F | Pages Revised - 3/75 |
| 7504 | G | Pages Revised - 4/75 |
| 7507 | H | Pages Revised - 7/75 |
| 7509 | J | Pages Revised - 9/75 |
| 7511 | K | Pages Revised - 11/75 |
| 7601 | L | Pages Revised - 1/76 |
| 7702 | M | Addendum S-1 Added - 2/77 |
| 7704 | N | Pages Revised - 4/77 |
| 7802 | P | Manual converted to 8-digit numbering system and text pages revised - 2/78 |

DATE CODE REVISION LEVELS

NOTE

All pages in this manual are identified by four-digit Date Codes. These codes are correlated with page revision-level effectivity as tabulated above.

TABLE OF CONTENTS


| PARAGRAPH | | PAGE |
|---|---|---|
| | SECTION 1 GENERAL INFORMATION | |
| 1.1 | Functional Description | 1-2 |
| 1.1.1 | General | 1-2 |
| 1.1.2 | Yoke | 1-4 |
| 1.1.3 | Character Belt & Belt Drive System | 1-4 |
| 1.1.4 | Hammers | 1-5 |
| 1.1.5 | Paper Feed System | 1-5 |
| 1.1.6 | Vertical Format Unit | 1-7 |
| 1.1.7 | Ribbon Drive Mechanism | 1-7 |
| 1.1.8 | Oscillating Hammer Bar | 1-7 |
| 1.1.9 | Power Distribution | 1-9 |
| 1.1.10 | Printed Circuit Assemblies | 1-9 |
| 1.1.10.1 | Interface PCA | 1-12 |
| 1.1.10.2 | Control Buffer PCA | 1-12 |
| 1.1.10.3 | Control Print/Paper Advance PCA | 1-12 |
| 1.1.10.4 | Register PCA | 1-13 |
| 1.1.10.5 | Hammer Buffer PCA | 1-13 |
| 1.1.10.6 | Hammer Driver PCA | 1-13 |
| 1.1.10.7 | Paper Advance & Hammer Bar Drive PCA | 1-13 |
| 1.1.10.8 | Paper Clamp PCA | 1-14 |
| 1.1.10.9 | Auxiliary PCA | 1-14 |
| 1.1.10.10 | Power Supply PCA | 1-14 |
| 1.1.10.11 | Vertical Format Unit PCAs | 1-15 |
| 1.1.10.12 | Line Marker PCAs | 1-15 |
| 1.1.10.13 | Feedback PCA | 1-15 |

TABLE OF CONTENTS (CONT'D)


| PARAGRAPH | | PAGE |
|---|---|---|
| 1.2 | Specifications | 1-16 |
| 1.2.1 | Printer Characteristics | 1-16 |
| 1.2.2 | Performance Specifications | 1-17 |
| 1.2.3 | Interface Specifications | 1-17 |
| 1.2.4 | Electrical Specifications | 1-19 |
| 1.2.5 | Environmental Conditions | 1-19 |
| 1.2.6 | Physical Characteristics | 1-20 |
| 1.2.7 | Replacement Supplies | 1-20 |
| | SECTION 2 INSTALLATION | |
| 2.1 | Introduction | 2-1 |
| 2.2 | Site Selection and Preparation | 2-1 |
| 2.2.1 | Power Requirements | 2-1 |
| 2.3 | I/O Interface Connections | 2-1 |
| 2.4 | Uncrating and Unpacking | 2-5 |
| 2.5 | Physical Installation | 2-5 |
| 2.6 | Functional Checkout | 2-7 |
| 2.7 | Operational Checkout | 2-9 |
| | SECTION 3 OPERATION | |
| 3.1 | Introduction | 3-1 |
| 3.1.1 | General | 3-1 |
| 3.2 | Operator Controls and Indicators | 3-1 |
| 3.2.1 | Operator Control & Indicator Panel | 3-1 |
| 3.2.2 | Additional Controls & Adjustments | 3-3 |
| 3.3 | Consumables Loading Procedures | 3-6 |
| 3.3.1 | Ribbon Loading | 3-6 |
| 3.3.2 | Paper Loading | 3-6 |

TABLE OF CONTENTS (CONT'D)


| PARAGRAPH | | PAGE |
|---|---|---|
| 3.3.3 | VFU Tape Loading Procedure | 3-10B |
| 3.4 | Operation | 3-12 |
| 3.4.1 | Internal Test Mode | 3-12 |
| 3.4.2 | External On-Line Mode | 3-13 |
| | SECTION 4 MAINTENANCE | |
| 4.1 | Introduction | 4-1 |
| 4.1.1 | General | 4-1 |
| 4.2 | Preventive Maintenance | 4-1 |
| 4.2.1 | Weekly Preventive Maintenance | 4-1 |
| 4.2.2 | Monthly Preventive Maintenance | 4-2 |
| 4.3 | Corrective Maintenance | 4-2 |
| 4.3.1 | Character Belt and Transport | 4-2 |
| | Bottom Character Clip Guide | |
| | Top Character Clip Guide Adjustment | 4-4 |
| 4.3.1.2 | Character Belt Replacement | 4-6 |
| 4.3.1.3 | Character Clip Replacement | 4-6 |
| 4.3.1.4 | Character Belt Pulley & Bearing Assembly | 4-9 |
| 4.3.1.5 | Character Belt Drive Motor Replacement | 4-9 |
| 4.3.1.6 | Character Belt Flywheel Replacement | 4-9 |
| 4.3.1.7 | Character Belt Drive Belt Replacement | 4-10 |
| 4.3.1.8 | Drive Motor Belt Tension | 4-10 |
| 4.3.2 | Ribbon Transport System | 4-10 |
| 4.3.2.1 | Ribbon Reverse Switches | 4-10 |
| 4.3.2.2 | Ribbon Tracking | 4-11 |
| 4.3.2.3 | Ribbon Drive Motor | 4-13 |
| 4.3.2.4 | Ribbon Drag Brakes | 4-15 |
| 4.3.2.5 | Ribbon Drive Shafts and Bearings | 4-15 |

TABLE OF CONTENTS (CONT.)


| PARAGRAPH | | PAGE |
|---|---|---|
| 4.3.3 | Yoke Mechanisms | 4-16 |
| 4.3.3.1 | Yoke Height Adjustment | 4-16 |
| 4.3.3.2 | Yoke Latch Adjustment | 4-18 |
| 4.3.3.3 | Yoke Safety Switch Adjustment | 4-19 |
| 4.3.3.4 | Yoke Pivot Adjustment | 4-19 |
| 4.3.3.5 | Yoke Counterbalance Stop Adjustment | 4-21 |
| 4.3.4 | Paper Advance Transport System | 4-21 |
| 4.3.4.1 | Paper Clamps | 4-21 |
| 4.3.4.2 | Out of Paper Switch | 4-23 |
| 4.3.4.3 | Paper Tractor Mechanism | 4-25 |
| 4.3.4.3.1 | Paper Tractor Phasing | 4-26 |
| 4.3.4.3.2 | Paper Tractor Replacement | 4-27 |
| 4.3.4.4 | Paper Advance Motor | 4-29 |
| 4.3.4.4.1 | Paper Advance Motor Replacement | 4-29 |
| 4.3.5 | Hammer Bar Mechanisms | 4-31 |
| 4.3.5.1 | Hammer Bar Replacement | 4-31 |
| 4.3.5.2 | Hammer Replacement | 4-33 |
| 4.3.5.3 | Hammer Flight Time Adjustment | 4-36 |
| 4.3.5.4 | Flight Time Mechanism Replacement | 4-37 |
| 4.3.5.4.1 | Flight Time Adjustment Pin Replacement | 4-37 |
| 4.3.5.4.2 | Flight Time Screw Adjust Replacement | 4-39 |
| 4.3.5.5 | Hammer Bar Pivot Plate Replacement | 4-39 |
| 4.3.5.6 | Hammer Bar Tilt Adjustment | 4-40 |
| 4.3.5.7 | Hammer Bar Density Adjustments | 4-41 |
| 4.3.5.7.1 | Density Stops Adjustment | 4-41 |
| 4.3.5.8 | Hammer Mylar Strip Replacement | 4-44 |
| 4.3.5.9 | Hammer Bar Drive Mechanism | 4-44 |

TABLE OF CONTENTS (CONT'D)


| PARAGRAPH | | PAGE |
|---|---|---|
| 4.3.5.9.1 | Replacement of Feedback Board Assembly | 4-46 |
| 4.3.5.9.2 | Replacement of Hammer Bar Drive Motor | 4-47 |
| 4.3.6 | Additional Adjustments | 4-55 |
| 4.3.6.1 | Belt and Gear Pulse Timing Adjustments | 4-55 |
| 4.3.6.2 | Magnetic Transducer Phasing Adjustment | 4-56 |
| 4.3.6.3 | Stepping Motor/Delayed Line Marker/VFU Alignment | 4-58 |
| 4.3.6.4 | Motor In Speed Adjustment | 4-59 |
| 4.4 | Corrective Maintenance Aids | 4-59 |
| 4.4.1 | Character Belt Does Not Turn | 4-62 |
| 4.4.2 | Intermittent Line Spacing | 4-62 |
| 4.4.3 | Ribbon Foldover | 4-62 |
| 4.4.4 | Ribbon Pickup Causing Smearing | 4-63 |
| 4.4.5 | Ribbon Not Reversing | 4-63 |
| 4.4.6 | Individual Character Clipping | 4-63 |
| 4.4.7 | Alternate Character Clipping | 4-63 |
| 4.4.8 | Individual Character Ghosting | 4-63 |
| 4.4.9 | General Character Ghosting | 4-64 |
| 4.4.10 | Individual Character Grouping | 4-64 |
| 4.4.11 | General Character Grouping | 4-64 |
| 4.4.12 | Adjacent Columns Not Printing | 4-64 |
| 4.4.13 | Printing Garbled Data | 4-65 |
| | SECTION 5 THEORY OF OPERATION | |
| 5.1 | On Line (Automatic) Mode | 5-1 |
| 5.2 | Off Line (Manual or Test) Mode | 5-2 |
| 5.3 | Mechanical Operation | 5-2 |
| 5.3.1 | Paper Handling | 5-2 |

TABLE OF CONTENTS (CONT'D)


| PARAGRAPH | | PAGE |
|---|---|---|
| 5.3.2 | Character Belt | 5-4 |
| 5.3.3 | Printing | 5-5 |
| 5.3.4 | Ribbon Transport | 5-5 |
| 5.4 | Logical Description | 5-6 |
| 5.4.1 | Initialization | 5-6 |
| 5.4.2 | Data Entry | 5-7 |
| 5.4.2.1 | Data Entry Register | 5-7 |
| 5.4.2.2 | Control Code Decoding Gates | 5-8 |
| 5.4.2.3 | Motor On/Off Control Codes | 5-8 |
| 5.4.2.4 | Line Buffer Character Register | 5-9 |
| 5.4.2.5 | Line Buffer Address Register | 5-10 |
| 5.4.2.6 | Deposit Character Cycle | 5-10 |
| 5.4.3 | Scan (Hammer Arming) Cycle | 5-12 |
| 5.4.3.1 | Line Buffer Register Status Circuitry | 5-13 |
| 5.4.3.2 | Scan Enable Circuit | 5-14 |
| 5.4.3.3 | Belt Relative Position Register | 5-15 |
| 5.4.3.4 | Character Code Register | 5-16 |
| 5.4.3.5 | Character Compare Register | 5-16 |
| 5.4.3.6 | Hammer Address Lines | 5-16 |
| 5.4.3.7 | Line Buffer Address Register | 5-17 |
| 5.4.4 | Print Cycle | 5-17 |
| 5.4.4.1 | Character Comparison Sync Circuitry | 5-18 |
| 5.4.4.2 | Print Time Generation Circuitry | 5-19 |
| 5.4.4.3 | Oscillating Hammer Bar Circuitry | 5-19 |
| 5.4.5 | Paper Advance Cycle | 5-21 |
| 5.4.6 | Power Supply | 5-22 |
| 5.5 | Interface Theory of Operation | 5-25 |
| 5.5.1 | General Considerations | 5-25 |

TABLE OF CONTENTS (CONT'D)


| PARAGRAPH | | PAGE |
|---|---|---|
| 5.5.2 | Data Input From the External Controller | 5-26 |
| 5.5.2.1 | Data Character | 5-26 |
| 5.5.2.2 | Space Code | 5-27 |
| 5.5.2.3 | Printing Control Codes | 5-27 |
| 5.5.2.3.1 | Line Feed | 5-28 |
| 5.5.2.3.2 | Carriage Return | 5-28 |
| 5.5.2.3.3 | Vertical Tab | 5-28 |
| 5.5.2.3.4 | Form Feed | 5-29 |
| 5.5.2.4 | Non-Printing Control Codes | 5-29 |
| 5.5.2.4.1 | Data Strobe | 5-29 |
| 5.5.2.4.2 | Master Reset | 5-30 |
| 5.5.3 | Printer Output Signals | 5-31 |
| 5.5.3.1 | Buffer Ready | 5-31 |
| 5.5.3.1.1 | Line Feed | 5-32 |
| 5.5.3.1.2 | Carriage Return | 5-32 |
| 5.5.3.1.3 | Vertical Tab | 5-33 |
| 5.5.3.1.4 | Form Feed | 5-33 |
| 5.5.3.1.5 | Single Space | 5-33 |
| 5.5.3.1.6 | Double Space | 5-34 |
| 5.5.3.1.7 | Motor On | 5-34 |
| 5.5.3.1.8 | Motor Off | 5-34 |
| 5.5.3.2 | On Line | 5-34 |
| 5.5.3.3 | Line Ready | 5-35 |
| 5.5.3.4 | Belt Motor In Speed | 5-35 |
| 5.5.3.5 | Paper Out | 5-35 |
| 5.5.3.6 | Alarm | 5-36 |

TABLE OF CONTENTS (CONT.)


| SUB-SECTION | | PAGE |
|---|---|---|
| | SECTION 6 | |
| | PCA ASSEMBLY DRAWINGS, PL'S, LOGIC DIAGRAMS AND SCHEMATICS | |
| 6.1 | Summary | 6-1.1 |
| 6.2 | Interface PCA | 6-2.1 |
| 6.3 | Control Buffer PCA | 6-3.1 |
| 6.4 | Control Print/Paper Advance PCA | 6-4.1 |
| 6.5 | Register PCA | 6-5.1 |
| 6.6 | Hammer Buffer PCA | 6-6.1 |
| 6.7 | Hammer Driver PCA | 6-7.1 |
| 6.8 | Paper Advance and Hammer Bar Drive PCA | 6-8.1 |
| 6.9 | Paper Clamp PCA | 6-9.1 |
| 6.10 | Auxiliary PCA | 6-10.1 |
| 6.11 | Power Supply PCA | 6-11.1 |
| 6.12 | VFU Phototransistor PCA | 6-12.1 |
| 6.13 | VFU LED PCA | 6-13.1 |
| 6.14 | Control Panel | 6-14.1 |
| 6.15 | Interupter PCA | 6-15.1 |
| 6.16 | 48 Character Code Converter PCA (Optional) | 6-16.1 |
| 6.17 | Wiring Diagrams | 6-17.1 |
| | SECTION 7 ILLUSTRATED PARTS LISTS | |
| 7-1 | Mother Board Assembly | 7-1.1 |
| 7-2 | Mother Board/Card Cage Assembly | 7-2.1 |
| 7-3 | Power Supply Chassis | 7-3.1 |
| 7-4 | Auxiliary Chassis Assembly | 7-4.1 |
| 7-5 | Front Panel Assembly | 7-5.1 |

TABLE OF CONTENTS (CONT.)


| SUB-SECTION | | PAGE |
|---|---|---|
| 7-6 | Cabinet Top Assembly | 7-6.1 |
| 7-7 | Yoke Assembly | 7-7.1 |
| 7-8 | Paper Clamp Assembly | 7-8.1 |
| 7-9 | Main Frame Assembly | 7-9.1 |
| 7-10 | Hammer Bar Assembly | 7-10.1 |
| 7-11 | Character Belt Assembly | 7-11.1 |
| 7-12 | Vertical Format Unit | 7-12.1 |
| S-1 | Hammer Bar Drive Mechanism (Addendum) | S-0/S-10 |

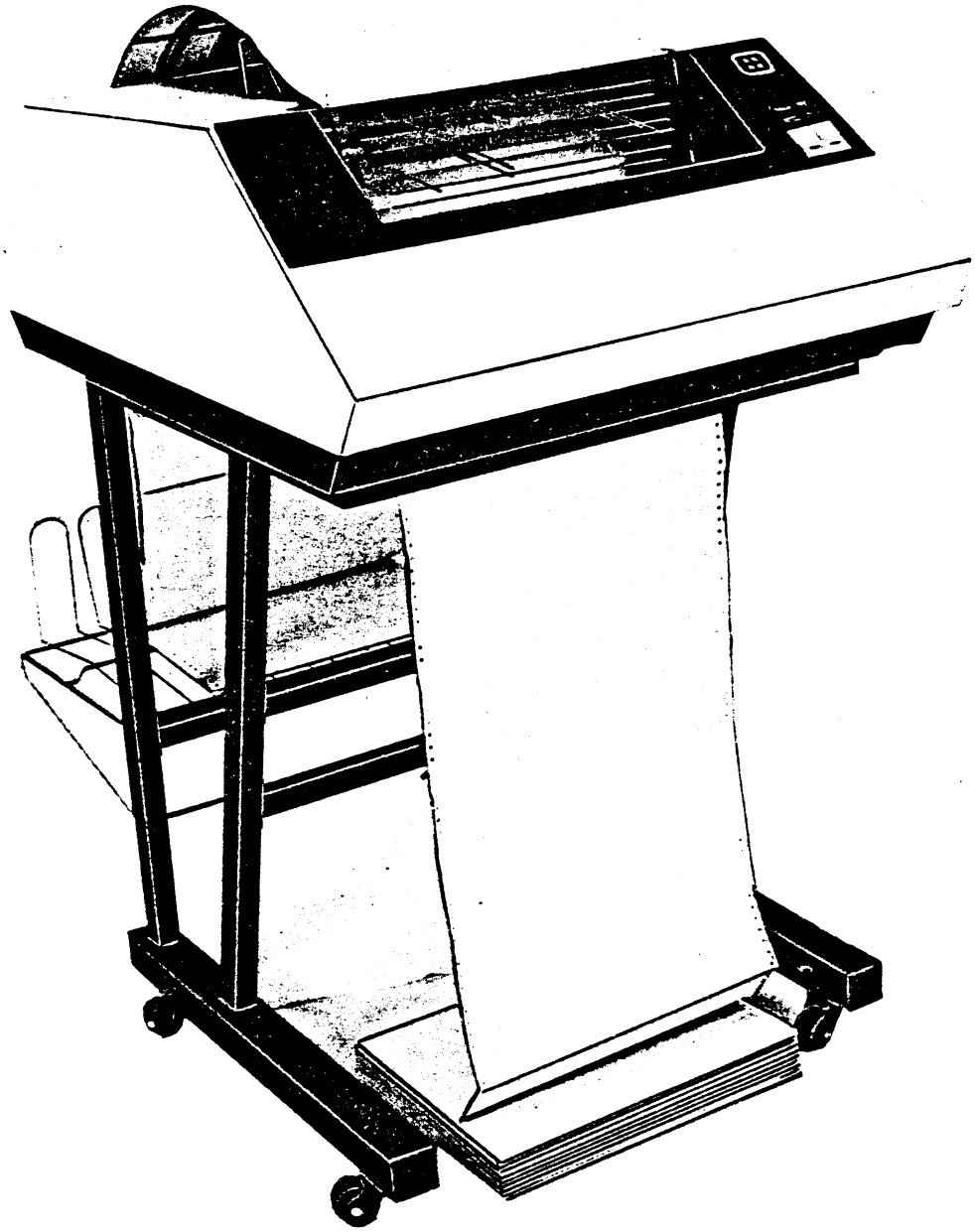

1423 SERIES LINE PRINTER

FIGURE 1-1

# SECTION 1

# GENERAL INFORMATION

## 1.1 FUNCTIONAL DESCRIPTION

### 1.1.1 GENERAL

The device described in this manual is a chain type impact printer capable of producing hard copy printout as a function of data supplied by an external source. The printout is recorded on standard fan-fold, sprocket fed business forms up to 16 inches in width.

The printer consists of the printing mechanism, a ribbon feed system, a paper advance system, and necessary buffer and printer electronics. The printing is accomplished by electromagnetically actuated hammers which are driven against paper, ribbon and then a preselected character on the rapidly rotating character belt. Hammer actuation is fast enough to preclude any smearing of the printed character even through the ribbon and associated character are in continuous motion.

Input data is stored in the line memory. As each character on the belt moves into position, two magnetic transducers sense the position of the characters in relation to the print columns.

The data in memory is compared against the belt characters on a column by column basis, one complete compare cycle for odd columns and one for even columns. A compare results in the setting of associated hammer arming electronics and then the printing of the characters in the associated columns. This process continues

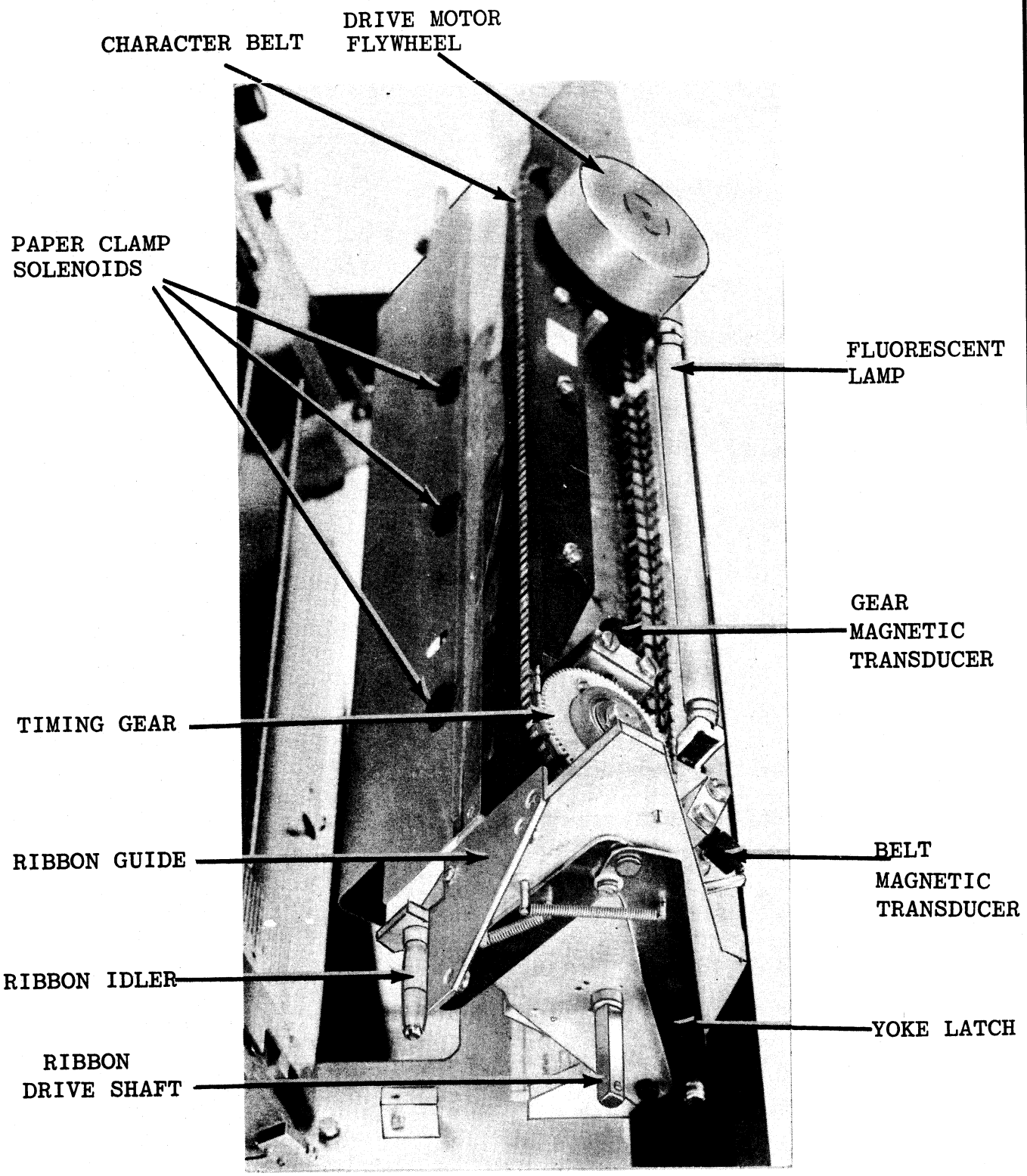


YOKE ASSEMBLY

FIGURE 1-2

until all print positions have been printed. Depending on the character set involved, slightly over 2 belt revolutions may be required to print one line of data. Paper clamps are deactivated in preparation for forms advance. The stepper motor is then activated to move the paper vertically in response to the applicable forms advance control codes, after which the paper is allowed to settle and the paper clamps are reactivated in preparation for the next line of print.

### 1.1.2 YOKE

The hinged yoke (Figure 1-2) contains the character belt and positions it in relation to the line of print hammers. The yoke is held securely in place by the manually operated yoke latch. The yoke may be swung open for ease of maintenance or to facilitate paper loading. The yoke also contains the ribbon drive, brake, and transport system, the character belt magnetic transducers, belt drive system, the three paper clamp solenoids, paper clamp driver electronics, and the fluorescent lamp and starter used to illuminate the hard copy printout.

### 1.1.3 CHARACTER BELT AND BELT DRIVE SYSTEM

The character belt consists of a glass fiber reinforced rubber timing belt. Attached to the belt are 96 plastic clips each of which contain two (2) individual metal type slugs. Each individual clip is removable and replaceable independent of other clips on the belt. The character belt is driven from the right hand idler pulley which is in turn driven from the main drive

motor through a timing drive belt. The drive pulley has a flywheel mounted on it to insure a consistant belt velocity. At the other end of the yoke, two magnetic transducers are mounted near the left hand idler pulley to determine the relation of characters on the belt with respect to the hammers.

### 1.1.4 HAMMERS (FIGURE 1-3)

There are 66 hammer assemblies (40 for an 80 column printer) mounted in a row on the hammer bar. Half of the hammers are mounted on the top of the hammer bar and the remaining half are mounted on the bottom. Each hammer head is two columns wide, and can be actuated once per odd column printing and once for even column printing. The hammer coils are driven by current pulses from the hammer driver circuitry. Each hammer is individually replaceable without removing other hammers, and flight time adjustment is provided for each individual hammer.

### 1.1.5 PAPER FEED SYSTEM (FIGURE 1-4)

The paper feed system moves the paper into position for printing, holds the paper stationary during the print cycle, and exits the printed form from the printing mechanism. The mechanism consists of two paper feed tractors, three solenoid actuated paper clamps and a three phase stepper motor with associated drive linkages. Paper feed is available, switch selectable, at 6 or 8 lines per inch. Mounted to the stepper motor shaft is a slotted strobe disc which acts as an interupter mechanism when coupled with the line marker assembly, and generates electrical pulses at a rate of 6 per inch and 8 per inch.

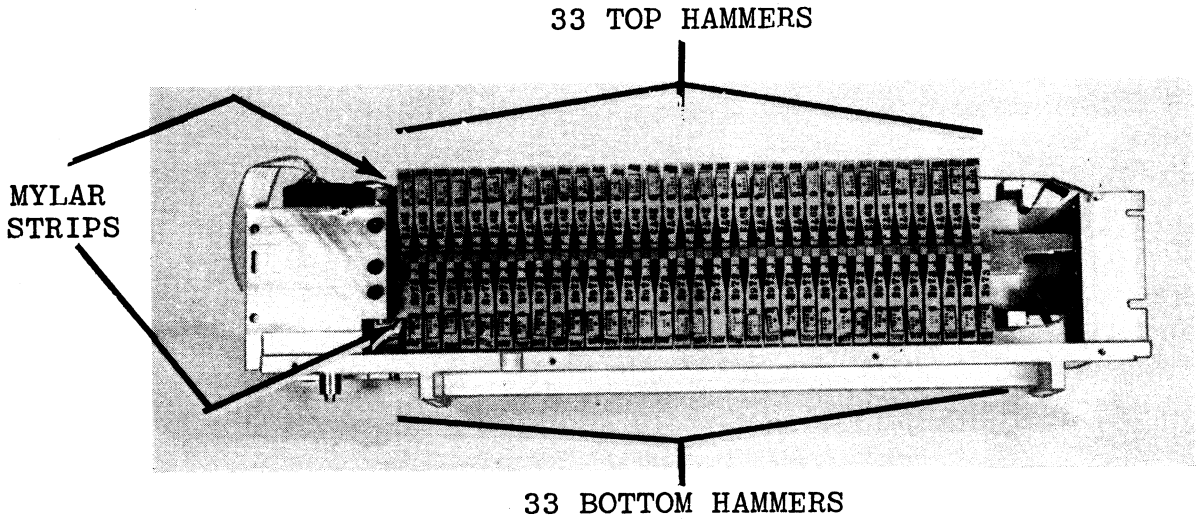


HAMMER ASSEMBLY
FIGURE 1-3

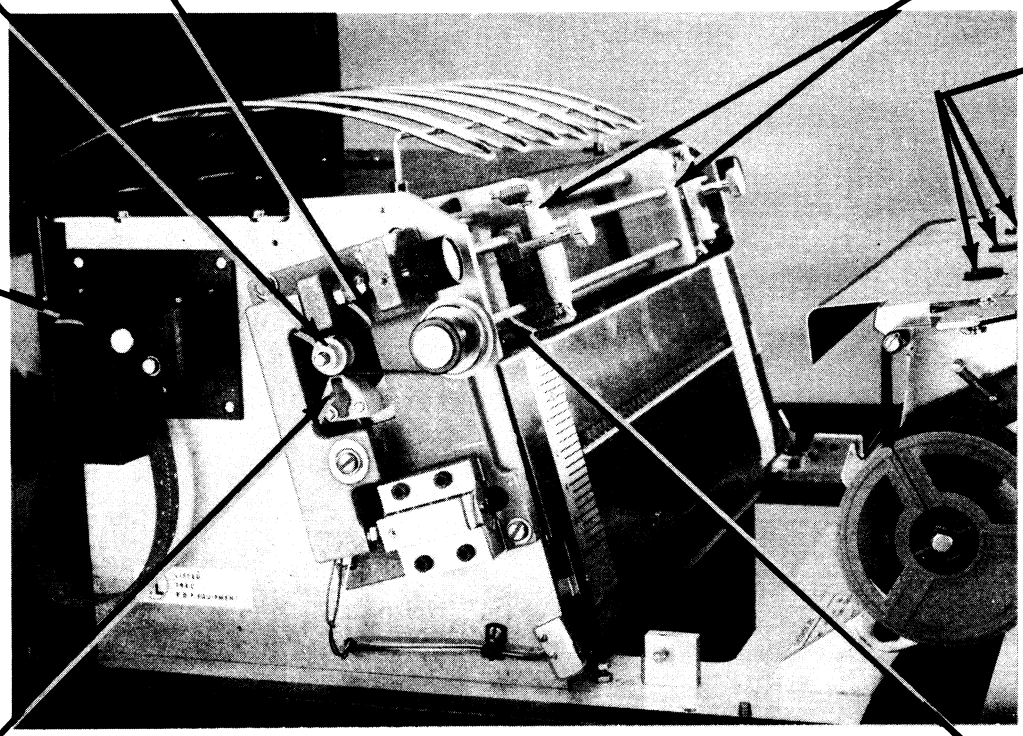


PAPERFEED SYSTEM
FIGURE 1-4

### 1.1.6 VERTICAL FORMAT UNIT (FIGURE 1-4)

The VFU assembly is mounted on the left hand side plate and is belt coupled to the paper feed stepper motor. The VFU accepts punched paper tape to obtain a preprogrammed line spacing of the print copy. The tape is positioned on the VFU sprocket and is driven in conjunction with the paper feed mechanism. The punched holes are photo-optically sensed and selectively used to determine the stopping position of the printed form.

### 1.1.7 RIBBON DRIVE MECHANISM (FIGURE 1-2)

The ribbon drive mechanism consists of two motors, two drag brakes, two guides and two idler rolls. Both ribbon motors are energized during print time or during paper motion; however, only one clutch at a time will be engaged. A raised eyelet is installed at each end of a ribbon, so that as the ribbon reaches the extreme of its travel in one direction, the eyelet will activate one of the ribbon reverse switches located on the side of the frame. This action causes the clutch to disengage and engages the opposite clutch. Drag brakes are provided to keep the ribbon under tension by utilizing a controlled drag on the disengaged motor. The ribbon is skewed in relation to the print line to insure that fresh ribbon is continually available for each character position.

### 1.1.8 OSCILLATING HAMMER BAR (FIGURE 1-5)

The oscillating hammer bar consists of the hammer bar frame, a full complement of hammer assemblies, a three phase stepper motor, and sensing housing with electronics positioned on the stepper

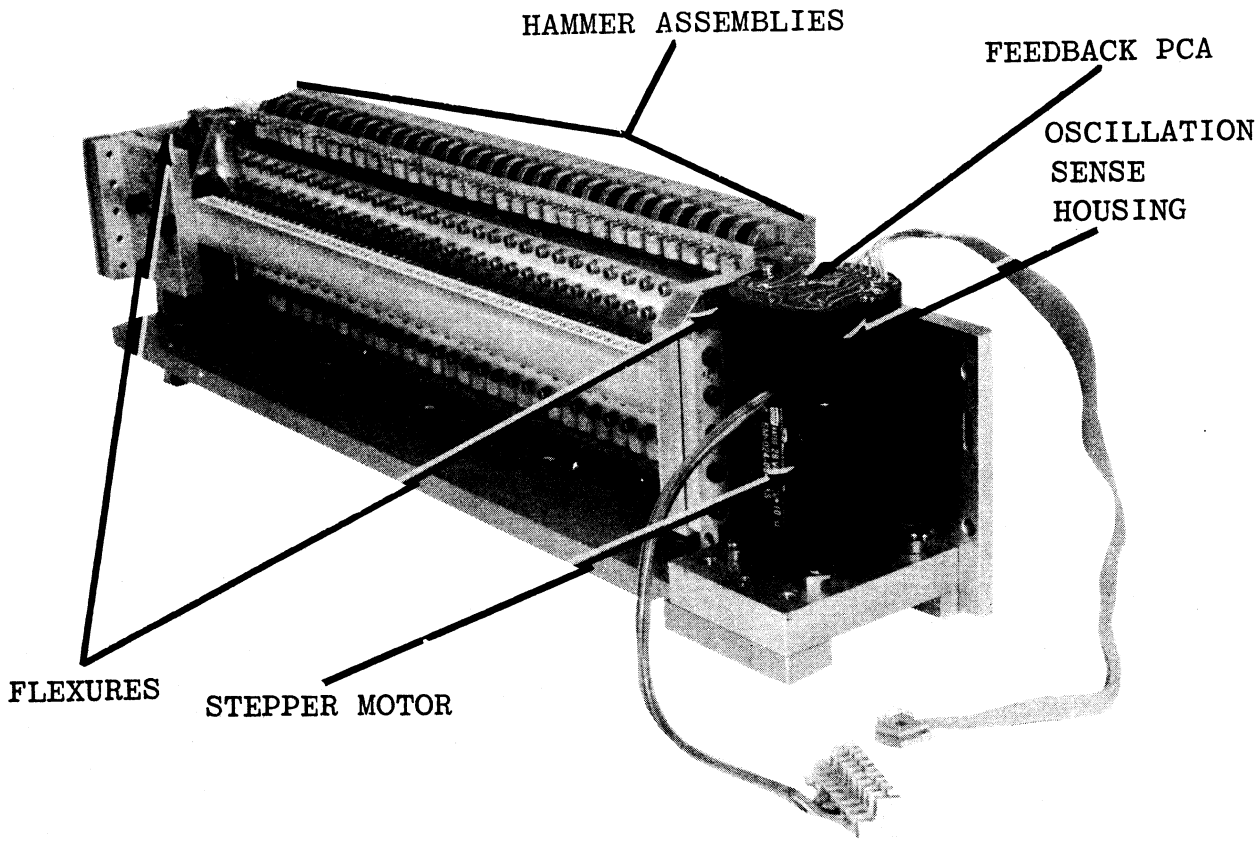


OSCILLATING HAMMER BAR
FIGURE 1-5

motor. The bar is mounted to the printer frame by flexures which permit movement of the hammer bar to two separate printing positions. Prior to odd column printing the stepper motor drives the bar to its left most position and before even printing to the right most position. This movement enables the hammer heads to be precisely centered over the odd or even column to be printed. Optical pickups and a slotted disc on the stepper motor shaft generate electrical signals which are used to control the stepper motor. The stepper motor shaft is coupled to the hammer bar by a ball bearing eccentric and push rod which position the bar full right or full left every 180° of motor shaft rotation.

### 1.1.9 POWER DISTRIBUTION (FIGURE 1-6)

The printer is capable of operating at either of the following input line voltages, which must be specified at the time of order:

a. 115 VAC ±10%, 60 Hz ±1 Hz, Single Phase

b. 230 VAC ±10%, 50 Hz ±1 Hz, Single Phase

These line voltages power the control electronics, logic electronics, and drivers through a multiple power supply located in a lower section of the cabinet. The multiple supply develops +30VDC, +5.2VDC and -12VDC and individually fuses each of these voltages.

### 1.1.10 PRINTED CIRCUIT ASSEMBLIES (FIGURE 1-7)

Figure 1-7 identifies the position of all major printed circuit assemblies used in the printer. Each PCA is composed of standard TTL or MOS integrated circuits and/or standard

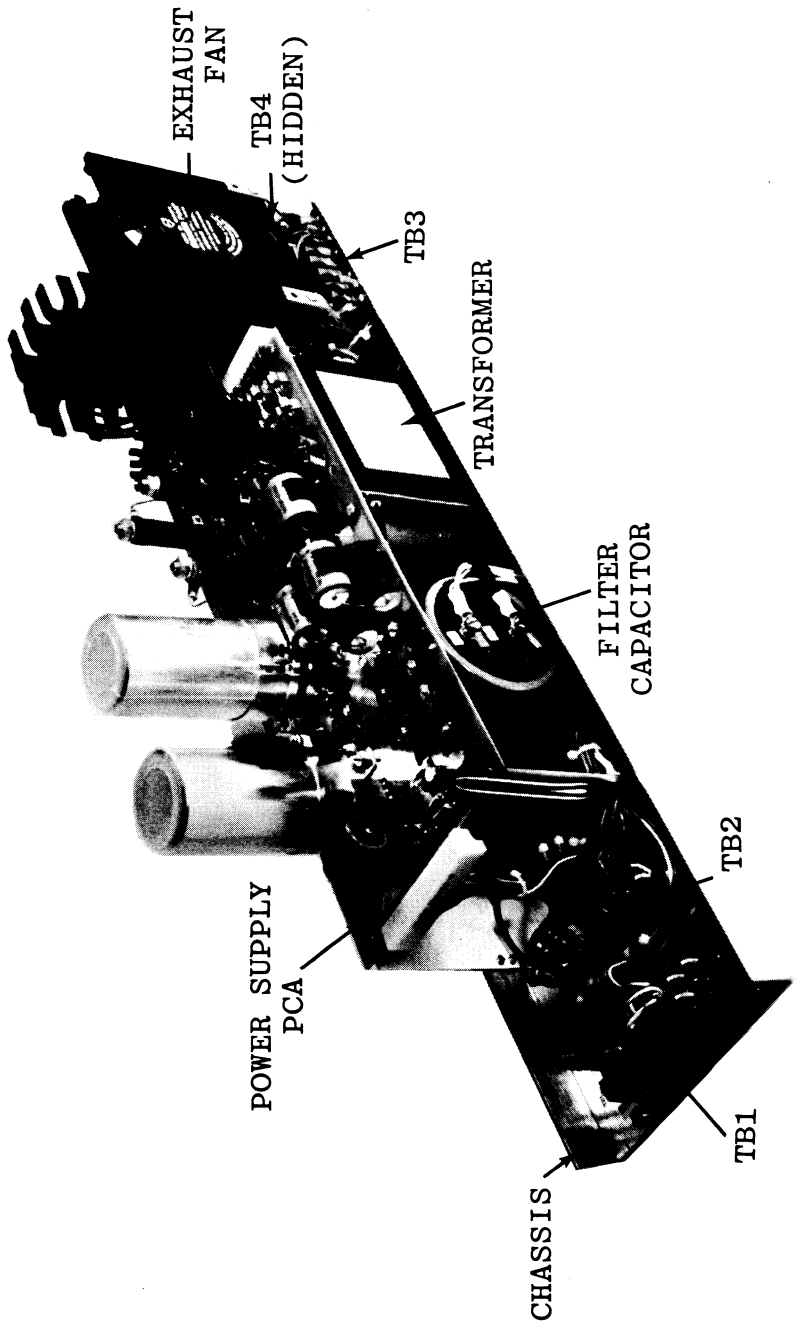


FIGURE 1-6. MULTIPLE POWER SUPPLY

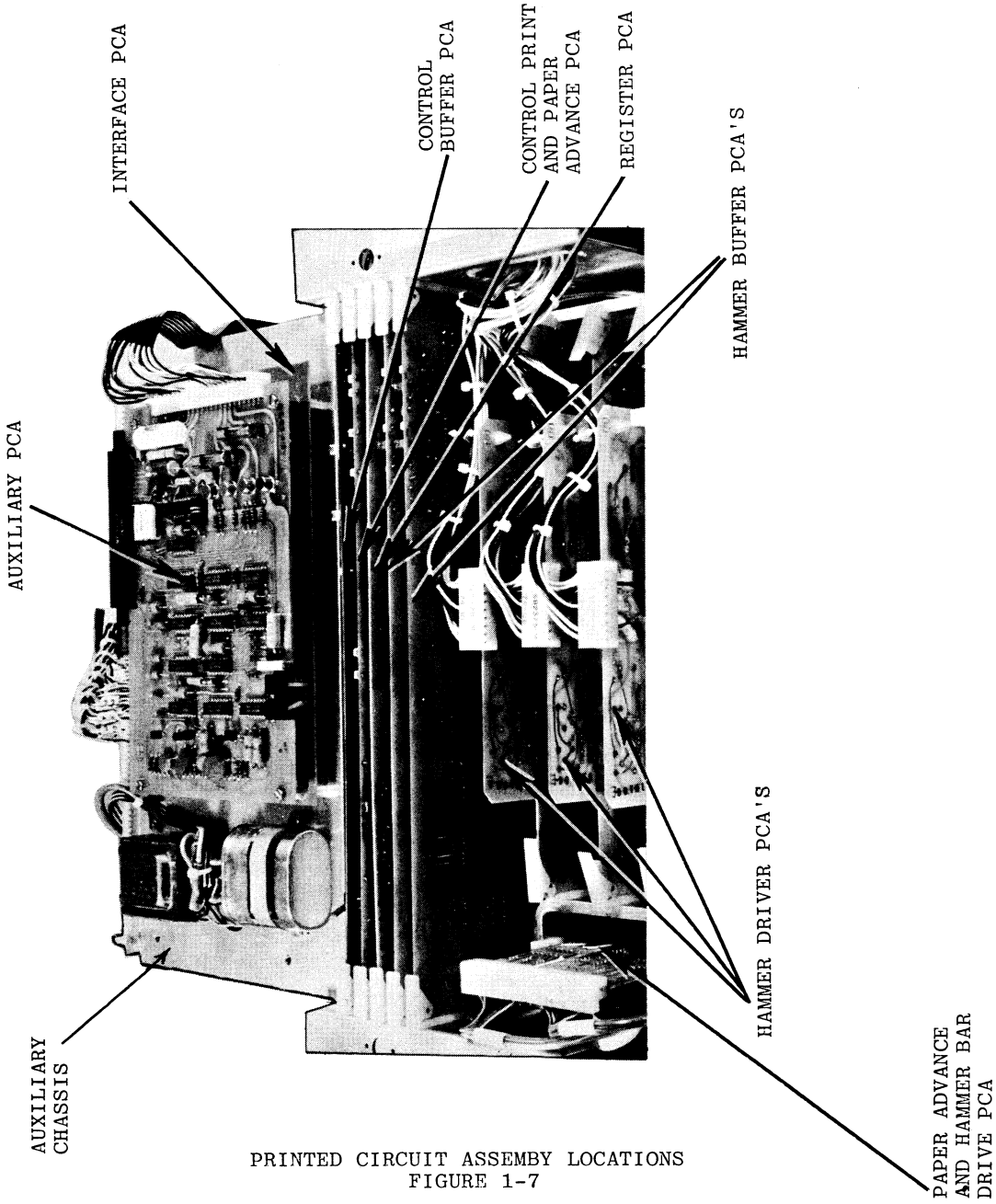


PRINTED CIRCUIT ASSEMBY LOCATIONS
FIGURE 1-7

discrete components. The logic electronics are mounted immediately to the rear of the hammer bar and also on the auxiliary chassis. The control electronics are located throughout the printer in close proximity to the controlled function. A brief description follows of the PCA functions:

#### 1.1.10.1 INTERFACE PCA

The interface enables the printer to communicate in a bit parallel character serial fashion with an external device. It accepts and processes commands, data, and control signals from both the printer mechanism and the external control unit. This PCA is mounted on the Auxiliary chassis under the Auxiliary PCA.

#### 1.1.10.2 CONTROL BUFFER PCA

The control buffer logics contain or perform the following:

a. 4 MHz clock

b. Controls for belt motor on/off commands

c. Controls storage entry of characters into the buffer.

d. Generates paper clamp enable and paper advance enable, and ribbon advance enable signals.

e. Generates the paper settling and hammer settling delays.

#### 1.1.10.3 CONTROL PRINT/PAPER ADVANCE PCA

The Control PRT/PA generates the stepper motor pulses required for paper advance, master reset circuitry, paper advancing controls, belt synchronization logics and hammer top/bottom enabling logics. A potentiometer is available for adjusting the belt sync phasing.

#### 1.1.10.4 REGISTER PCA

The Register stores and validates character positions of an entire line of data in the MOS static shift register, decodes incoming control characters, constantly tracks relative belt position, provides decoding matrix signals used to address selected hammer enabling latches and detects legal character (end of buffer) addresses.

#### 1.1.10.5 HAMMER BUFFER PCA

Two Hammer Buffer PCA's are used to memorize which hammers are selected for firing and to provide the proper fire pulses to each selected hammer.

#### 1.1.10.6 HAMMER DRIVER PCA

Three Hammer Driver boards are used to provide current to the selected hammer coils. The driver output stages are Darlington type circuits with current limiting resistors in series with the coils. Optionally available Hammer Driver PCA's contain fuse alarm circuitry to automatically detect the occurance of a blown fuse, opened series limiting resistor, opened coil or a shorted transistor in the output stage. Blown fuses are individually replaceable.

#### 1.1.10.7 PAPER ADVANCE AND HAMMER BAR DRIVE PCA

This board contains driver circuits for both paper advance and the oscillating bar stepper motors. Each drive section contains three Darlington switching circuits. Control logics are provided to initialize the hammer bar to the left most position

during power on sequencing and to accurately insure odd/even traversing of the bar between print cycles.

1.1.10.8 PAPER CLAMP PCA

This assembly contains a single driver stage which powers the three paper clamp solenoids. The PCA is located on the bottom side of the yoke assembly.

1.1.10.9 AUXILIARY PCA

The Auxiliary PCA contains controls for the ribbon drive motors and clutches, circuitry to detect correct character belt motor speed, and generates an alarm signal when; the yoke is not closed, a fuse alarm exists, the VFU cover is open, or the unit is out of paper. A master reset switch is provided which can also be positioned to insure the belt motor is always on. This PCA is located on the Auxiliary chassis, mounted on four standoffs.

1.1.10.10 POWER SUPPLY PCA

This PCA provides DC power for the entire printer. +30VDC is provided for the hammer driver circuits, stepper motors and paper clamps. -12 VDC is utilized by the MOS static shift registers while the +5.2 VDC supply provides $V_{CC}$ for the TTL logics. Each voltage section of the supply consists of a bridge rectifier, filter capacitor with bleeder resistor, a series pass transistor stage and an integrated circuit regulator. Each section is individually fused and the +5.2 V section has an SCR crowbar circuit that provides over voltage protection. This PCA is

located in the power supply assembly mounted in the lower section of the cabinet.

### 1.1.10.11 VERTICAL FORMAT UNIT PCA'S

The VFU has two PCA's, one mounted in the upper housing and one located in the lower housing. The upper PCA contains light emitting diodes that are aimed directly at corresponding phototransistors on the lower PCA. The bottom PCA contains an interlock switch that generates a signal indicating closure of the VFU housing.

### 1.1.10.12 LINE MARKER PCA'S

The Line Marker contains two PCA's, mounted facing each other in the line marker housing. The LED's on one PCA provide illumination to corresponding phototransistors on the opposing PCA. Two streams of pulses are produced during paper motion, one at 6 and the other at 8 pulses per inch of paper motion.

### 1.1.10.13 FEEDBACK PCA

This circular assembly is mounted on a housing attached to the top of the oscillating bar stepper motor. The Feedback PCA contains five interrupter modules which produce signals as a function of slots in the housing mounted on the stepper motor shaft. These signals provide the control data which the Paper Advance and Hammer Bar Drive PCA uses to control the position of the oscillating hammer bar.

## 1.2 SPECIFICATIONS

This section defines printer characteristics, performance, interface, electrical, environmental, physical and replaceable supplies specifications.

### 1.2.1 PRINTER CHARACTERISTICS

Number of print positions:

Standard: 132 Columns

Optional: 80 Columns

Character Font (see Table 1-1)

Standard: 64 Character

Optional: 48 or 96 Character

Horizontal Character Spacing: 10 Characters/Inch

Vertical Line Spacing:

Standard: 6 Lines/Inch

*Optional: 8 Lines/Inch

or 6/8 LPI Switchable

*Available only with IBM tape compatible VFU.

Character Code:

Standard: 7 Bit USASCII (See Table 1-1)

Optional: EBCDIC

Character Type Face:

Width: 0.056 Inches

Height: 0.092 Inches

Vertical Format Unit:

Standard: 2 Channel with (1) inch teletype compatible format tape.

Optional: 2 Channel IBM compatible.

or 12 Channel IBM compatible.

### 1.2.2 PERFORMANCE SPECIFICATION

Paper Feed Time: Single Line Feed: 20 Milliseconds

Double Line Feed: 40 Milliseconds

Paper Slew Rate: 8.33 Inches/Second

Print Rate (Minimum): 48 Character Font: 250 LPM

64 Character Font: 210 LPM

96 Character Font: 150 LPM

### 1.2.3 INTERFACE SPECIFICATIONS

The following interface specifications pertain only to the standard interface. For variations or substitutions, refer to Section 5 for detailed theory of operation and custom interface specifications.

Input Levels:

Logical "O" State: 0.0 to 0.4V @ 15.4 ma

Logical "1" State: 2.4 to 4.5V @ 1.2 ma

Output Levels:

Logical "O" State: 0.0 to 0.4V @ 48 ma

Logical "1" State: 2.4 to 4.5V @ 1.2 ma

I/O Connector: Cannon DDC-37P

Data/Control Character Code: 7 Bit USASCII (See Table 1-1)

| Function | Control Code (Octal) |
|---|---|
| Line Feed | 012 |
| Vertical Tab | 013 |
| Form Feed | 014 |
| Carriage Return (No Form Feed) | 015 |
| Line Feed Control to Single Line | 021 |
| Line Feed Control to Double Line | 022 |
| Turn on Belt Motor | 023 |
| Turn off Belt Motor | 024 |

| Bits $b_4$ | $b_3$ | $b_2$ | $b_1$ | Col. → / Row ↓ | $b_7$ 0 | $b_7$ 0 | $b_7$ 0 | $b_7$ 0 | $b_7$ 1 | $b_7$ 1 | $b_7$ 1 | $b_7$ 1 |
|---|---|---|---|---|---|---|---|---|---|---|---|---|
| | | | | $b_6$ | 0 | 0 | 1 | 1 | 0 | 0 | 1 | 1 |
| | | | | $b_5$ | 0 | 1 | 0 | 1 | 0 | 1 | 0 | 1 |
| | | | | | 0 | 1 | 2 | 3 | 4 | 5 | 6 | 7 |
| 0 | 0 | 0 | 0 | 0 | | | SP | 0 | @ | P | ` | p |
| 0 | 0 | 0 | 1 | 1 | | DC1 | ! | 1 | A | Q | a | q |
| 0 | 0 | 1 | 0 | 2 | | DC2 | " | 2 | B | R | b | r |
| 0 | 0 | 1 | 1 | 3 | | DC3 | # | 3 | C | S | c | s |
| 0 | 1 | 0 | 0 | 4 | | DC4 | $ | 4 | D | T | d | t |
| 0 | 1 | 0 | 1 | 5 | | | % | 5 | E | U | e | u |
| 0 | 1 | 1 | 0 | 6 | | | & | 6 | F | V | f | v |
| 0 | 1 | 1 | 1 | 7 | | | ' | 7 | G | W | g | w |
| 1 | 0 | 0 | 0 | 8 | | | ( | 8 | H | X | h | x |
| 1 | 0 | 0 | 1 | 9 | | | ) | 9 | I | Y | i | y |
| 1 | 0 | 1 | 0 | 10 | | LF | * | : | J | Z | j | z |
| 1 | 0 | 1 | 1 | 11 | | VT | + | ; | K | [ | k | { |
| 1 | 1 | 0 | 0 | 12 | | FF | , | < | L | \ | l | \| |
| 1 | 1 | 0 | 1 | 13 | | CR | – | = | M | ] | m | } |
| 1 | 1 | 1 | 0 | 14 | | | . | > | N | ↑ | n | ¬ |
| 1 | 1 | 1 | 1 | 15 | | | / | ? | O | ← | o | DEL |

NO OPERATION

Control Characters

Std. 64 Set

Std. 96 Set

LF = Print and Line Feed

VT = Vertical Tab (Print and then Advance)

FF = Form Feed (Print and then Advance)

CR = Print and Carriage Return (does not Advance)

DC1 = Set Line Feed to Single Space

DC2 = Set Line feed to Double Space

DC3 = Turn Motor On

DC4 = Turn Motor Off

NOP = No Operation

USASCII CODE CHART

TABLE 1-1

| | |
|---|---|
| Interface Cable Length: | 50 feet maximum |
| Data Transfer Rate: | 333,333 Char./Second |

### 1.2.4 ELECTRICAL SPECIFICATIONS

Primary AC power considerations are given below:

| | |
|---|---|
| Line Voltage: | Standard: 115VAC ±10%, 60 Hz, ±1% |
| | Optional: 230VAC ±10%, 50 Hz, ±1% |
| Phase: | Single |
| Power: | 600 Watts Maximum |
| AC Input: | Via Line Cord |

### 1.2.5 ENVIRONMENTAL CONDITIONS

| | |
|---|---|
| Operating: | Temperature: 50 F to 100 F |
| | Relative Humidity: 20% to 75% |
| Storage: | Temperature: 0 F to 150 F |
| | Relative Humidity: 5% to 98% |

Shock: The unit is capable of withstanding a 5 "G" shock of 11 milliseconds duration in the vertical direction without sustaining permanent damage.

## 1.2.6 PHYSICAL CHARACTERISTICS (QUIET CABINET)

| | | | |
|---|---|---|---|
| Cabinet Size: | Height | 40.5 | Inches |
| | Width | 30 | Inches |
| | Depth | 28 | Inches |
| | Net Weight | 275 | Pounds |
| | Shipping Weight | 315 | Pounds |
| Cabinet Color: | Standard: | Beige | |
| | Optional: | Specify | |

## 1.2.7 REPLACEMENT SUPPLIES

| | | |
|---|---|---|
| Forms: | Type | Sprocket fed, continuous fanfold |
| | Width | 8 to 16 Inches |
| | Multiple Copies | Up to 6 part, carbon interleaved |
| Ribbon: | Standard: | Nylon cloth, Multipass Life 140,000 Lines |
| | Optional: | R2 - Carbon coated mylar, Multipass Life 50,000 Lines |
| VFU Tapes: | Standard: | 1 Inch tape loop |
| | Optional: | 1-5/8 Inch tape loop, IBM compatible |

# SECTION 2

# INSTALLATION

## 2.1 INTRODUCTION

This section provides information necessary for the installation of the printer. Site selection and preparation, interface requirements, uncrating and unpacking, physical installation, and operational checkout procedures are described in detail.

## 2.2 SITE SELECTION AND PREPARATION

Of primary consideration in site selection for the printer, is the need to insure adequate clearance around the printer for operator and maintenance access. Figure 2-1 shows recommended clearances. Environmental conditions should be held within the tolerances given in the specifications of Section 1.2.

### 2.2.1 POWER REQUIREMENTS

Primary AC power is specified at the time of order. Tolerances on the input power is specified in Section 1.2. For purposes of assisting the user in calculating current and air conditioning requirements, the printer is rated at 600 watts maximum.

## 2.3 I/O INTERFACE CONNECTIONS

An interface cable connector is provided at the rear of the printer cabinet. The standard connector is a Cannon DCC-37S type. Reference Figure 2-2 for I/O pin configuration. Figure 2-3 defines standard I/O pin assignments. For interface timing characteristics, refer to Section 5 which defines exact interface requirements for

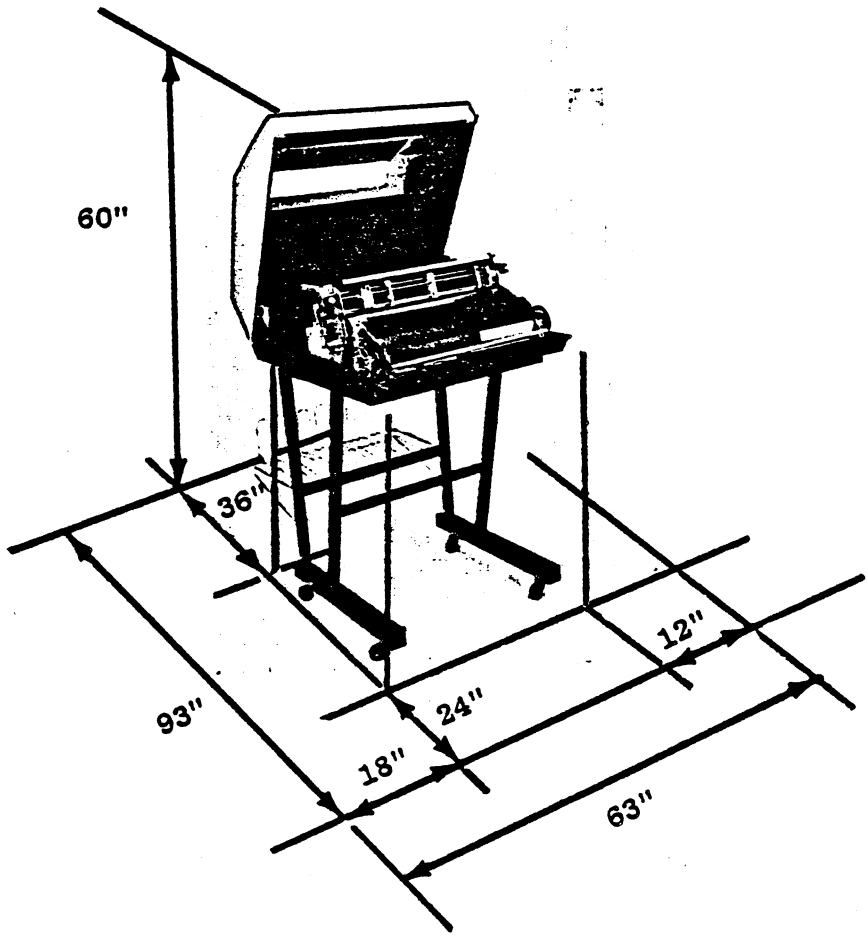


RECOMMENDED CLEARANCE DIMENSIONS

FIGURE 2-1

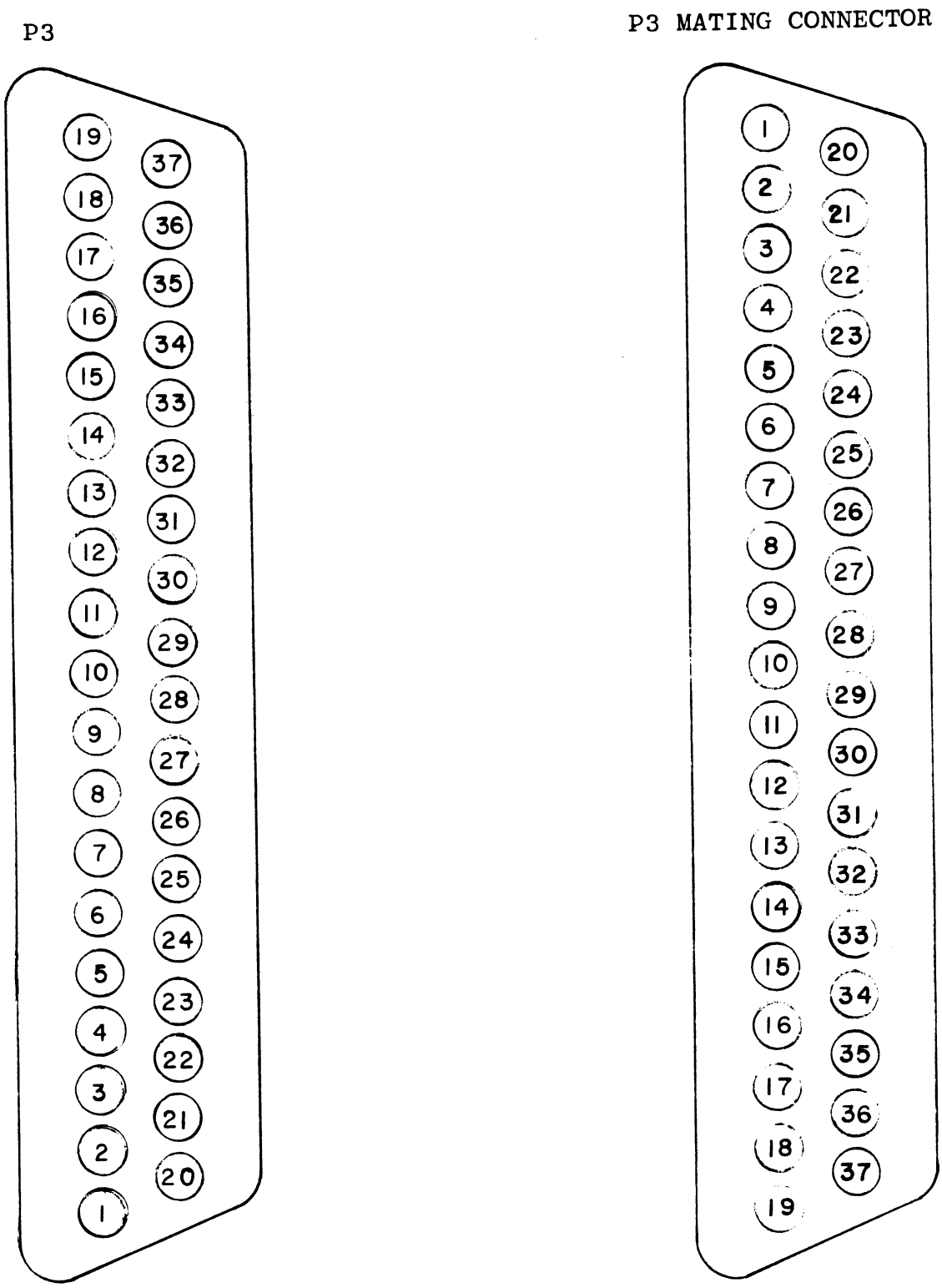


NOTE: Connectors are shown as viewed from pin side.

FIGURE 2-2 Interface Connector Configuration

## INTERFACE CONNECTOR DETAILS

| Pin Signal/Return | Signal | I/O |
|---|---|---|
| 1 | +5VDC | O |
| 20/25 | Ground | O |
| 2/21 | Buffer Ready | O |
| 7/26 | Alarm | O |
| 5/6 | Alarm Serial | O |
| 3/4 | Buffer Ready Serial | O |
| 9/10 | Serial Data | I |
| 19/37 | Data Strobe | I |
| 15/33 | Data Bit 1 | I |
| 16/34 | Data Bit 2 | I |
| 17/35 | Data Bit 3 | I |
| 18/36 | Data Bit 4 | I |
| 8/27 | Data Bit 5 | I |
| 11/30 | Data Bit 6 | I |
| 13/31 | Data Bit 7 | I |
| 22 | Spare | - |
| 23 | Spare | - |

FIGURE 2-3

data transfer and control code transmission.

## 2.4 UNCRATING AND UNPACKING

The following steps are to be followed to remove the printer from its shipping container. Two people will be required to perform the procedure.

a. Cut and remove the metal banding straps.

b. Cut through the tape holding the carton top closed.

c. Remove the four (4) toro-pads.

d. Remove the inner box from the outer container.

e. Cut the tape on the inner carton and open.

f. Remove the foam pad and tri-wall sleeving.

g. Remove the printer with attached wooden base from the inner box.

h. Remove the four (4) mounting bolts from the wooden base.

### 2.4.1 REPACKING

If the printer is to be stored or reshipped, it is strongly recommended that the original shipping container be reused.

## 2.5 PHYSICAL INSTALLATION

As shipped, the printer is ready for immediate "plug-in" operation. The flywheel is not attached to the motor during shipment in order to avoid bending the motor shaft. Before proceeding further, install the flywheel as follows:

a. Open the cabinet cover.

b. Remove black front yoke cover by removing the six pan head screws and lockwashers.

c. Remove the round flywheel cover located over the right hand section of the yoke by removing the two pan head screws and lockwashers. Remove the character belt cover by removing the remaining screw on the left hand side.

d. Gently place the flywheel over the motor shaft and align screws on flywheel with flats on shaft. The hammer adjusting tool (5/64" Allen Hex Key wrench) fits the two Allen set screws on the flywheel hub.

e. Rotate flywheel until set screws are accessible and securely tighten them with the hammer adjusting tool.

f. Replace character belt cover and round flywheel cover taking care to position cover so that flywheel is free to rotate. This cover should also be positioned as close to the front of the machine as possible to avoid interfering with the paper and ribbon.

g. Replace front yoke cover.

After making the necessary cabling, flywheel, paper handling, ribbon, and accessory installations, the printer could go directly "on-line". However, it is suggested that each unit be subjected to a thorough examination to determine that all printer components have not been damaged or loosened during transit. Perform the following pre-operational procedure.

a. If provided, attach the paper carrier rack and paper refold rack to the printer.

b. Insure proper installation and seating of the five (5) fuses on the Power Supply PCA and the two (2) fuses on the Auxiliary PCA.

c. Check all fuses in each of the three (3) Hammer Driver PCA's.

d. Insure that all PCA's are properly seated in their connectors. An individual check of each PCA is a must.

e. Insure all push-on connectors are properly positioned and seated.

f. Check that all visible screws are secure.

g. Verify the line voltage and frequency are the same as that listed on the name plate at the rear of the printer.

## 2.6 FUNCTIONAL CHECKOUT

Plug the power cord into the service outlet with the on/off switch in the off position. Various switches are located throughout the printer. The physical location of a switch can be determined by referencing Section 3. For checkout purposes, these switches should be set to the following positions.

| | | |
|---|---|---|
| a. | Motor Always On Switch: | Off Position. |
| b. | Test Switch: | Off Position. |
| c. | Alarm Switch: | Disabled Position. |
| d. | 6/8 LPI Switch: | As required. |

The following steps should be performed to determine if the printer is operating properly in an off-line mode.

a. Open the yoke by raising the latch bar, lifting up and pulling forward.

b. Rotate the pulley on the left end of the paper tractor shaft. It should turn freely.

c. Move the power on/off switch to the on position and observe that the air circulation fans are operating properly.

d. Again try to rotate the paper tractor shaft pulley. It should require noticeable force.

e. Try to rotate each ribbon spool. One should turn with a slight amount of drag, and the other should be locked.

f. Actuate the ribbon reverse switch for the spool that is free to rotate. A click should be heard and the free spool should become locked while the formerly locked spool should now be free. Depress the other ribbon reverse switch and return to the original condition.

g. Load the ribbon as described in Section 3.3.1.

h. Load the VFU tape loop as described in Section 3.3.3.

i. Depress the Form Feed button on the control panel. The paper drive shaft should turn until the Top of Form position is reached while at the same time the locked ribbon spool should rotate.

j. Close the yoke and observe that the No Paper indicator is lit on the front panel.

k. With the Motor Always On switch in the off position, verify that the Motor Off indicator is lit on the front

panel. Move the switch to the On position, and observe that the indicator is extinguished.

l. The Alarm indicator will be activated during the following abnormal conditions:

   1. A Paper Out condition is detected.
   2. The Yoke is unlatched, or
   3. One or more of the hammer driver fuses has blown, provided this option has been selected.

m. Load paper as described in Section 3.2.2.

n. Toggle the test switches to the on position. If the density controls are properly adjusted (see Section 3.2.2.f) dollar signs ($) should print in all positions with uniform density and with no clipping, ghosting, or misregistration.

The functional checkout is now complete. Any corrective maintenance requirements arising from the functional testing can be satisfied by referring to Section 4.

## 2.7 OPERATIONAL CHECKOUT

Connect the printer to an external data source via the I/O connector. Insure the test switch is turned off, the Motor Always On switch is in the on position and the 6/8 LPI switch, if incorporated, is positioned. By pushing the Print Pushbutton, the unit will go "on-line" and await data input from the controller. For complete testing, a rolling alphabet pattern should be fed to the printer. During testing, all eight (8) control codes (Reference

Table 1-1) should be transmitted and checked for proper operation. To check the DC3 and DC4 control codes, the Motor Always On switch must be in the off position. For specifics on interface timing requirements and theory of operation, refer to Section 5.

# SECTION 3

# OPERATION

## 3.1 INTRODUCTION

### 3.1.1 GENERAL

This section provides instructions and information necessary for the operation of the printer. Included in this section are: A description of operator controls, consumables replacement procedures, operating instructions, and general principles of operation.

## 3.2 OPERATOR CONTROLS AND INDICATORS

The operator control and display panels are located on the front of the cabinet. Figure 3-1 shows the relative position of each of the push button controls and indicators. Note that a display indicator is visible through the plexiglass when the indicator is lighted. Remaining operator and maintenance controls are situated throughout the printer and can be located by referencing Figure 3-2 and 3-3. Following is a brief description of controls and indicators.

### 3.2.1 OPERATOR CONTROL AND INDICATOR PANEL

a. Print - Depressing this push button will initiate operation by placing the printer on-line and capable of accepting data from an external source.

b. Stop - Depressing this push button will allow the last line of data to be printed and then cause the printer to go off-line.

c. Line Feed - Depressing this push button initiates a single line feed.

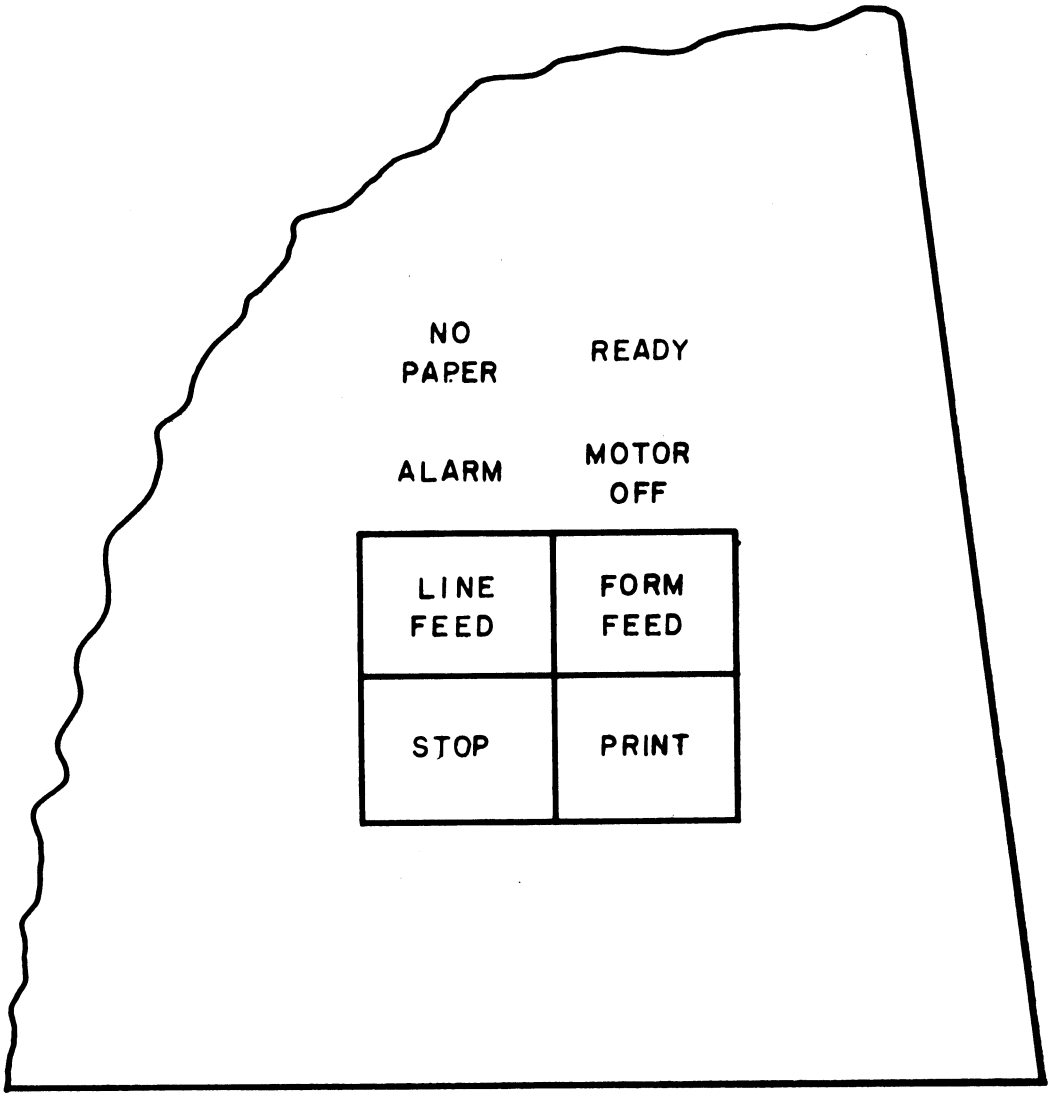


Indicator and Control Panel

FIGURE 3-1

d. Form Feed - This pushbutton initiates paper advance until the Top-of-Form position is reached.

e. Ready - This indicator is visible when the printer is ready to accept data from an external source.

f. Motor Off - This indicator is lit when the character belt motor is off. The motor may be started via a control code from the external source or by activating the Motor Always On Switch.

g. Alarm - This indicator is active when the yoke is open, the unit is out of paper, or a blown fuse is sensed (if this option is incorporated).

h. No Paper - This indicator, when active, signifies that a no paper condition has occurred approximately two (2) inches below the print line.

### 3.2.2 ADDITIONAL CONTROLS AND ADJUSTMENTS

a. Power On/Off - This rocker switch, located at the left rear of the printer, turns on the primary AC power.

b. Motor Always On - This toggle switch, located on the Auxiliary PCA, has three possible positions.

1. The left position is a momentary closure that provides a master reset signal to the printer.

2. The middle position is the Motor Always On condition. The belt motor will be on provided power is applied. The electronics will not respond to Motor Off/Motor On commands from the external source in this position.

3. The right hand position is the auto position. In this mode, the external source must control the belt

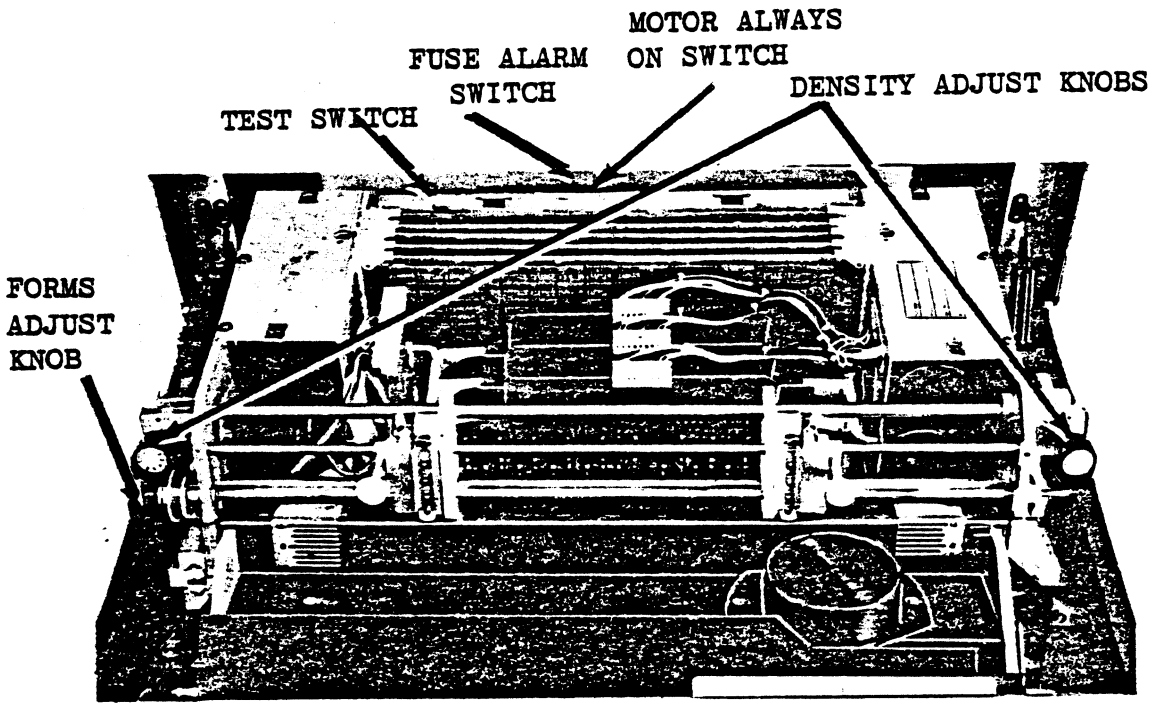


CONTROLS

FIGURE 3-2

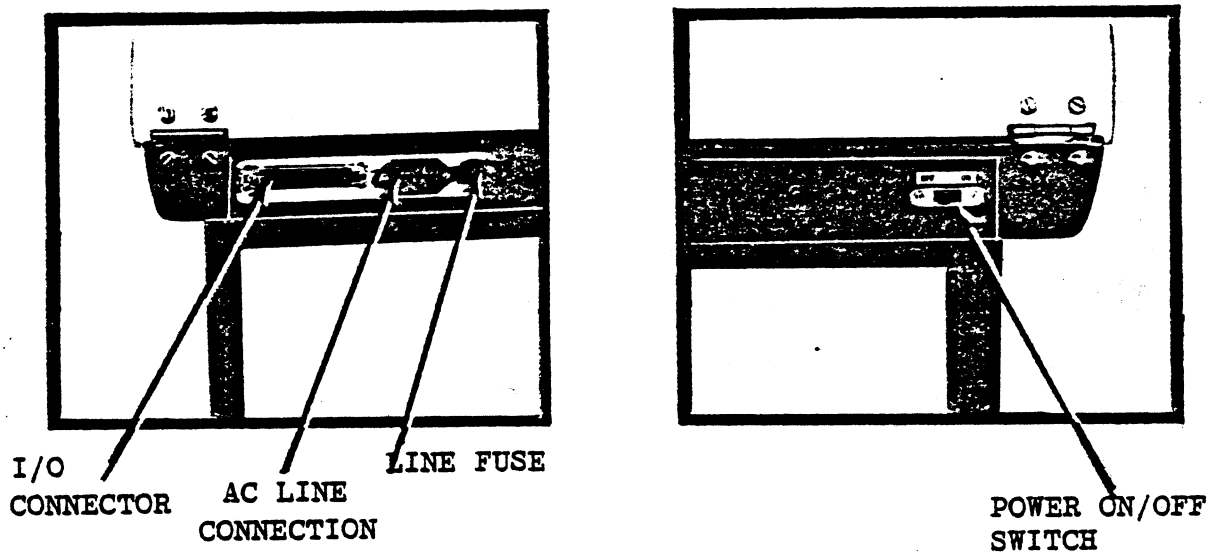


REAR CONFIGURATION

FIGURE 3-3

motor on/off state via control codes.

c. Fuse Alarm - This toggle switch controls the printer response to a fuse alarm condition. The alarm is sensed in the left position and ignored in the right position.

d. 6/8 LPI - This toggle switch conditions the electronics to select the proper line strobe signal to control the rate of paper advance. (Optional).

e. Test - This toggle switch is located on the Control Buffer PCA. The left hand position is off or inactive. When the switch is moved to the right hand position, the printer will enter the "internal test" mode of operation. A continuous pattern of dollar signs ($) will be printed for the USASCII code while the letter "D" will be printed when using EBCDIC code.

f. Density Adjust - The hammer penetration is controlled by the two density adjust knobs shown in Figure 3-2. These knobs permit operator adjustment of the overall print density to accomodate the different weight and thickness of forms. The knobs are numerically graduated to provide ready reference points for the various forms. A clockwise rotation will increase the density, but excessive penetration can cause smearing or ghosting.

g. Forms Adjust - This adjustment is located on the left hand end of the tractor shaft. By pulling out and rotating the spring loaded knob, the operator can shift the line of print to the desired position on the page.

## 3.3 CONSUMABLES LOADING PROCEDURES

The following paragraphs detail recommended procedures to install ribbon, load paper, and mount the VFU tape loop.

### 3.3.1 RIBBON LOADING

This procedure should be followed by first removing power from the unit and then by opening both the cabinet and the yoke. Reference Figures 3-4.1 to 3-4.4, together with the following description.

a. Place the full ribbon spool on the left hand ribbon spool mounting arm with the ribbon exiting the spool in a clockwise direction. (When the plastic reel is properly seated, a captive bearing at the end of one face of the mounting arm will impede reel removal.)

b. Thread the ribbon around the idler roller and over the left hand ribbon guide.

c. Slide the ribbon under the plastic shield and continue across the yoke face.

d. Thread the ribbon over the right guide and around the right hand idler roller. Pull out sufficient ribbon so that the reversing bumper on the ribbon is beyond the idler roller.

e. Place the take-up spool on the right hand spool mounting arm and take up the ribbon slack.

### 3.3.2 PAPER LOADING (FIGURE 3-5 and 3-5A)

NOTE

The following procedure should be implemented whenever the NO PAPER alarm indicator is illuminated.

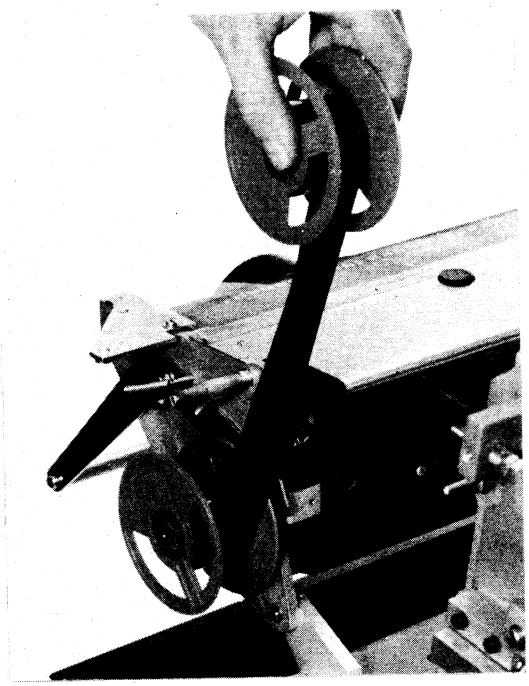

RIBBON LOADING
FIGURE 3-4.1

RIBBON LOADING
FIGURE 3-4.2

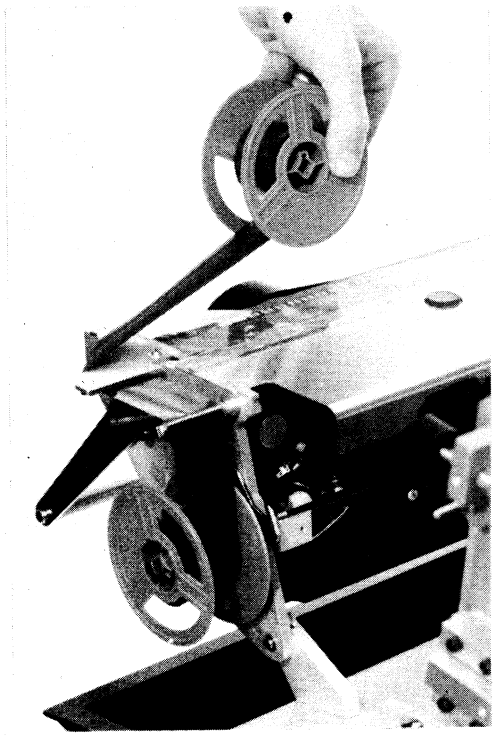

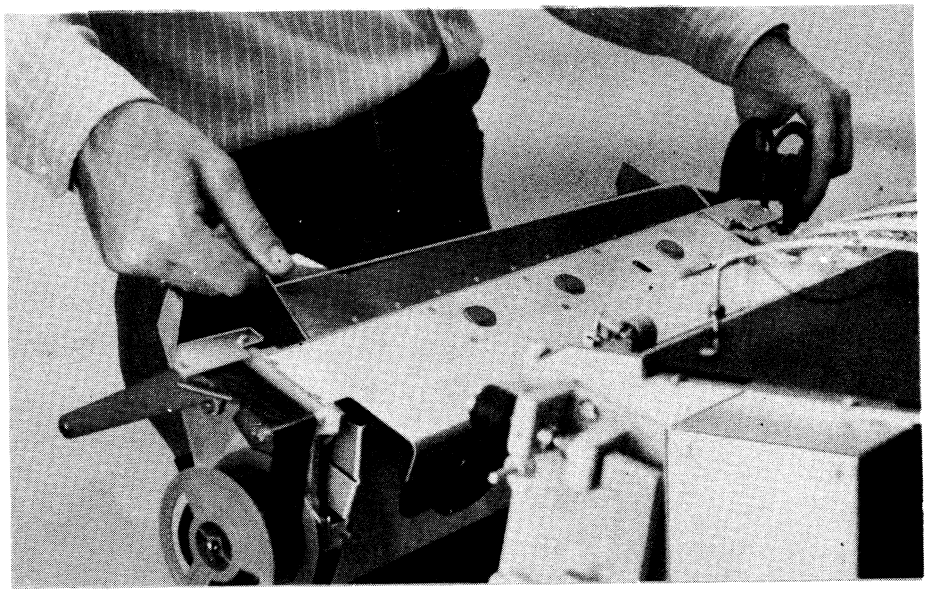

RIBBON LOADING

FIGURE 3-4.3

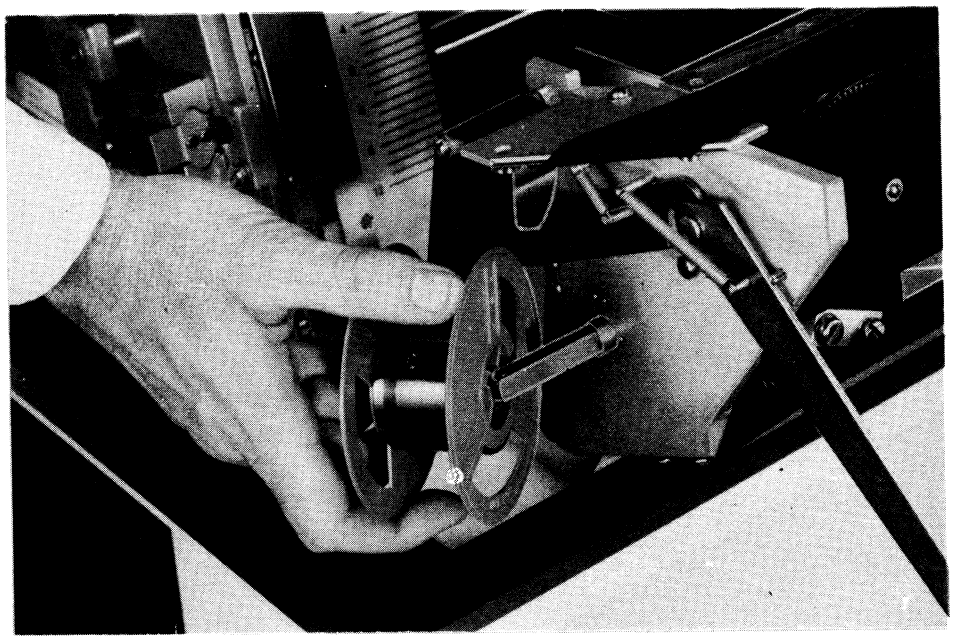

RIBBON LOADING

FIGURE 3-4.4

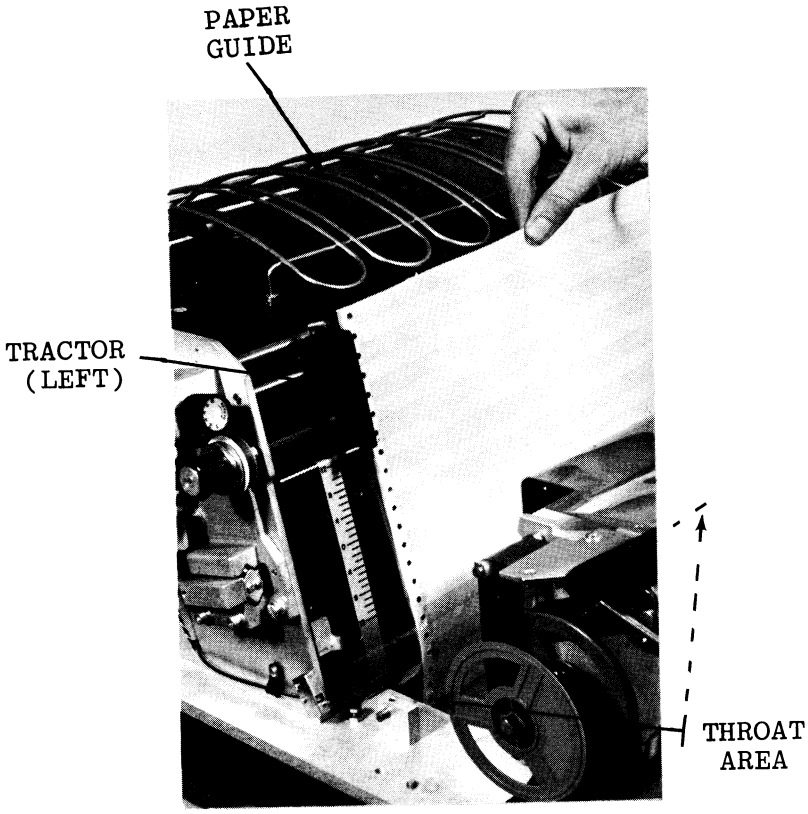


THREADING PAPER THROUGH THROAT AREA

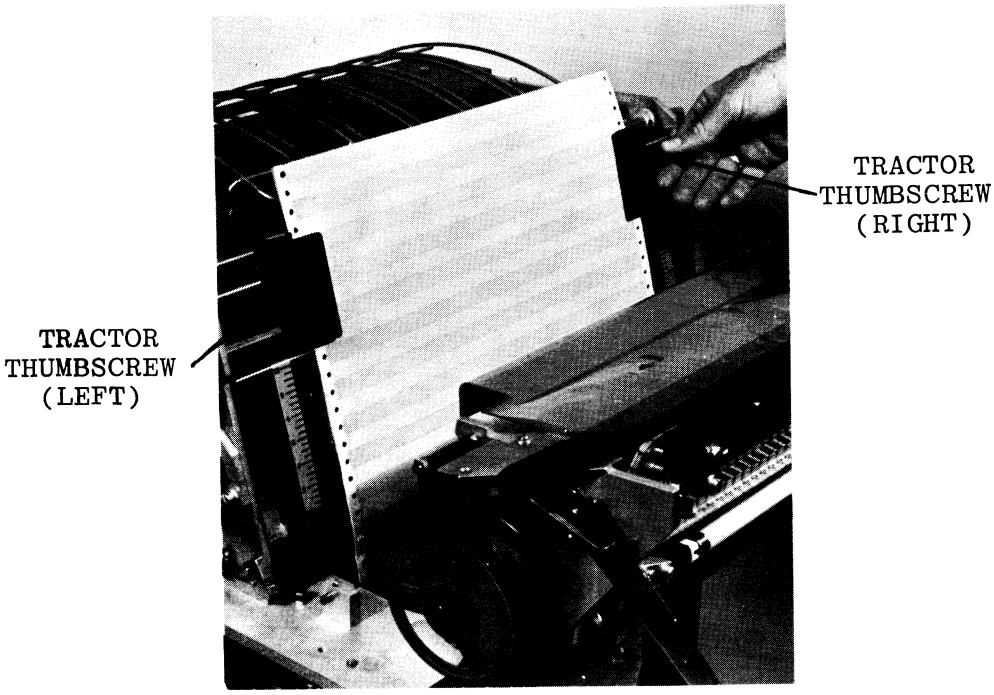


POSITIONING TRACTORS FOR PROPER TENSION
PAPER LOADING
FIGURE 3-5

With power ON and a format tape loop installed (paragraph 3.3.3), press the FORM FEED pushbutton. This will initialize the tractors to the Top-of-Form position

a. With the cabinet top raised and yoke opened, press down on the tractor FLAP LATCH controls (see Figure 3-5A), opening the FLAPS -- remove any remaining forms sheets (if paper previously installed)

NOTE

Never attempt to load paper without first, opening the Yoke.

b. Flip the POSITION CLAMP CONTROLS (one, per tractor) outward releasing the shaft clamping mechanisms --- space the tractors (center-to-center) as required to accept the new width forms.

c. Feed the new forms up through the printer throat area (figure 3-5, Top View), and engage the forms on the tractors; close both tractor FLAPS securely.

d. Center the forms horizontally by sliding the tractor/forms combination left or right, as required, using the two Formscales (on hammer bar cover plate) as centering guides.

e. Maintain the forms in the centered position; to adjust forms horizontal tension, make slight changes in Center-to-Center tractor spacing as required, until forms are reasonably taut (no sagging or wrinkling). Do not overtighten forms! When tension is satisfactory, flip both POSITION CLAMP CONTROLS inward, locking the shaft clamping mechanisms.

f. Adjust forms vertical alignment (first print line location) by means of the FORMS ADJUST Control (paragraph 3.2.2, step g.) --- Align the desired forms first print-line location with the zero scale markings on the two Formscales.

g. Close the yoke and cabinet top --- the NO PAPER Alarm indicator should be extinguished. Pass forms over the paper guide and through the exit slot in the cabinet top rear; (press the FORM FEED pushbutton as required to feed paper). Guide the forms into the Refold Rack as printing commences.

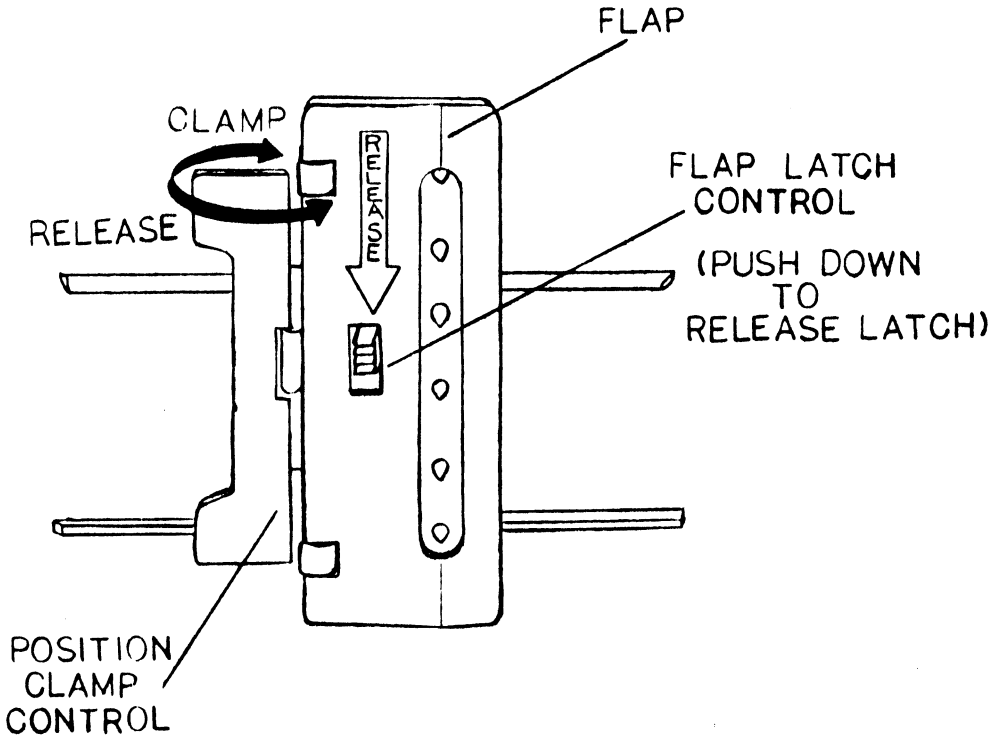


(LEFT-HAND TRACTOR SHOWN)

FIGURE 3-5A

### 3.3.3 VFU FORMAT TAPE LOADING

The Format Tape is to be installed as follows:

a. Open the cabinet top cover and locate the VFU unit on the left hand side plate. Reference Figure 3-6.

b. To lift the top VFU housing, pull the release knob out and then up. This will expose the drive sprocket on the bottom housing.

c. Place the Format Tape around the bottom housing while insuring the sprocket holes in the tape engage the drive sprockets.

NOTE

2 Channel VFU; Insure that the punched channels are on the outboard side of the drive sprockets.

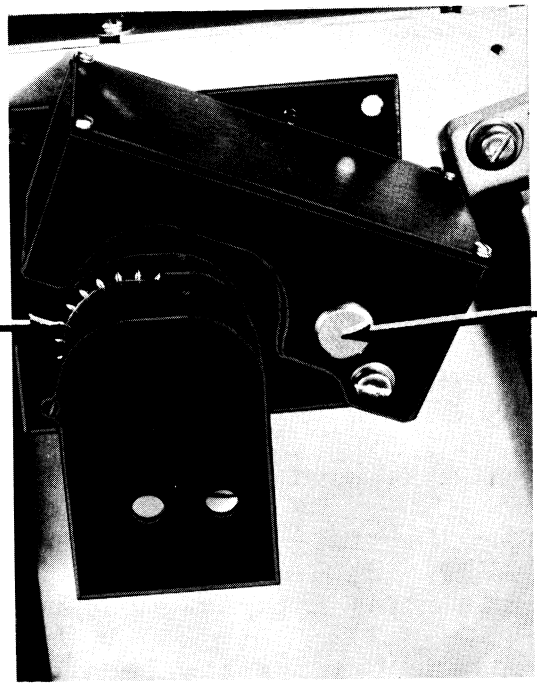


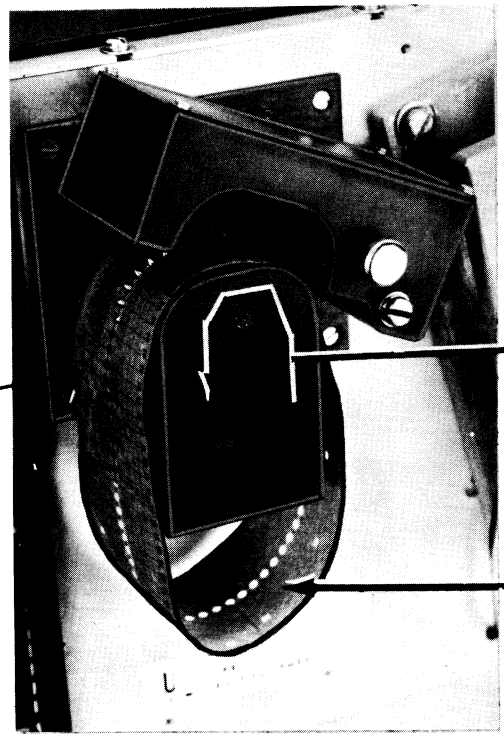


VFU TAPE LOADING

FIGURE 3-6

NOTE: 12 channel VFU; Insure that channel one is the inboard channel.

## 3.4 OPERATION

The printer is capable of operating in two modes, the internal test mode (off-line) and the external on-line mode.

### 3.4.1 INTERNAL TEST MODE

The internal mode is used for maintenance, running operation verification checks, and initial setup and adjustment. The printer may be operated in the internal mode as follows:

a. Verify that the printer has been properly installed and connected.

b. Load the VFU format tape.

c. Load the ribbon.

d. Set the toggle switches as follows:

| | |
|---|---|
| Motor Always On: | Always On Position |
| 6/8 LPI: | As required |
| Test Switch: | Off Position |
| Fuse Alarm Switch: | Enable Position |

e. Turn on the Power On/Off switch.

f. Load the forms.

g. Move the test switch to the on position.

h. Monitor the print-out to verify that the penetration controls are properly set.

i. Insure that the print line is correctly positioned on the form. If not, adjust by using the spring loaded knob on the left end of the tractor shaft.

j. Move the test switch back to the off position and verify that printing ceases.

### 3.4.2 EXTERNAL ON-LINE MODE

The external mode is the normal on-line operating mode. Operation with the external source is accomplished as follows:

a. Connect the interface cable to the printer.

b. Perform a. through f. of 3.4.1.

c. Press the Print push button.

d. Perform h. and i. of 3.4.1.

e. Press the Stop push button and observe that printing ceases.

# SECTION 4

# MAINTENANCE

## 4.1 INTRODUCTION

### 4.1.1 GENERAL

Maintenance of this printer is divided into Preventive and Corrective. Preventive maintenance should be performed on a regularly scheduled basis and will reduce the requirements for corrective maintenance. Corrective maintenance described in this section includes the more complex and complicated adjustment and replacement procedures. A section of "fault vs probable cause" is given for the more common failures.

## 4.2 PREVENTIVE MAINTENANCE

Preventive maintenance should be scheduled on a regular basis to minimize the necessity for corrective maintenance. A flexible schedule should be established which can be based on environment, average daily printing through-put, and convenience of timing for preventive maintenance. The following is a recommended series of preventive maintenance operations divided into weekly and monthly PM sessions.

### 4.2.1 WEEKLY PREVENTIVE MAINTENANCE

Recommended procedure is as follows:

a. Operate the printer in test mode and check for any abnormal printing characteristics.

b. Check all alarms, indicators, interlocks, and controls for proper operation.

c. Remove paper dust and carbon dust from all printer mechanisms.

d. Inspect the character belt for characters that have excessive ink buildup. Use a toothbrush to remove the buildup. Ink buildup that is resistant to the toothbrush can be removed by using a common pin which will not damage the extremely hard characters.

e. Remove the ribbon to clean the ribbon guides and shield.

f. Run printer in test mode to verify printout.

### 4.2.2 MONTHLY PREVENTIVE MAINTENANCE

a. Perform the weekly preventive maintenance.

b. Check printout for misregistration and/or clipping characteristics. Adjust hammer flight times and phasing as required.

c. Where applicable, replace the hammer bar mylar strips after approximately 500 printing hours of operation.

## 4.3 CORRECTIVE MAINTENANCE

The following sections provide a description of a component and the procedure necessary to replace and adjust or align it. A section on "fault vs probable causes" is given at the end of Section 4. It is suggested that standard troubleshooting procedures be followed to isolate or identify a problem, then refer to the appropriate area in the section and perform the indicated corrective action.

### 4.3.1 CHARACTER BELT AND TRANSPORT

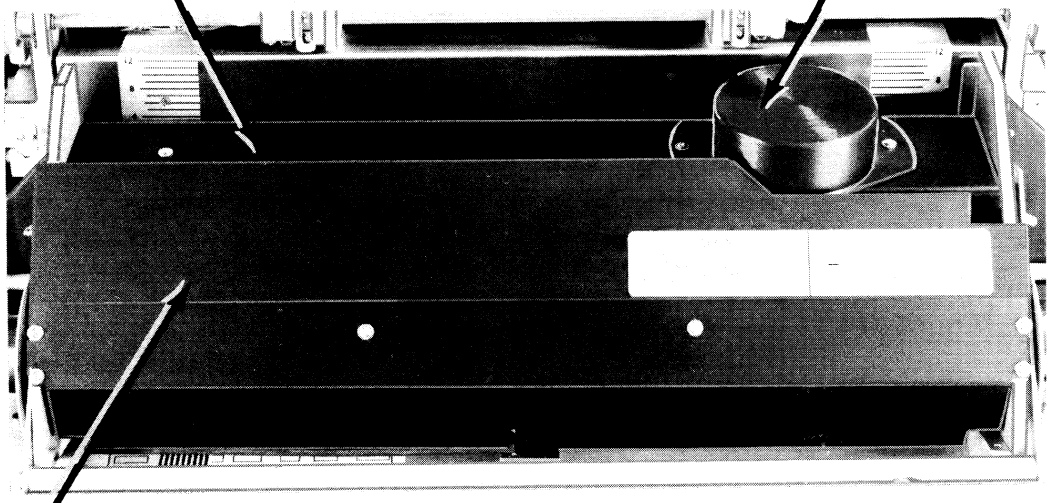


TOP YOKE COVERS
FIGURE 4-1

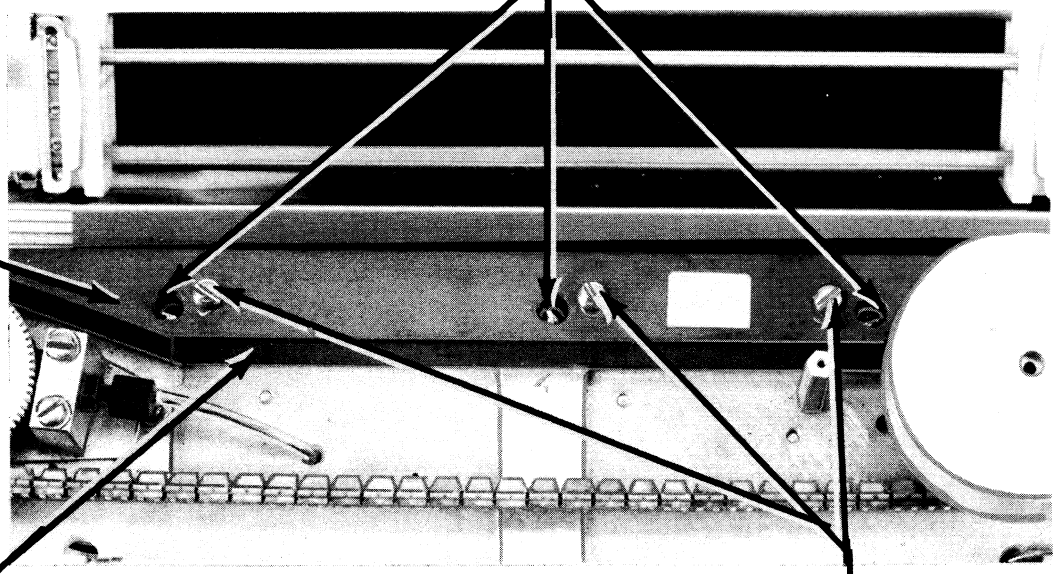


CHARACTER BELT GUIDE ADJUSTMENT

FIGURE 4-2

## BOTTOM CHARACTER CLIP GUIDE

NOTE

The Bottom Character Clip Guide has been properly adjusted and secured at the factory and should never require readjustment.

## TOP CHARACTER CLIP GUIDE ADJUSTMENT

a. Remove the belt, flywheel, and lamp covers (figure 4-1); Place all screws and washers in the flywheel cover for convenience.

b. Lift the static eliminator brush (Sketch C) up and out of contact with the character belt.

c. Loosen the three non-recessed top guide retaining screws (figure 4-2A, 1).

d. Load single-part paper into the printer. Use plain paper or the back side of the available forms.

e. Install a new print ribbon. Position both DENSITY ADJUST controls ccw (so that "1" on the control knobs is at the 9 o'clock position).

f. Set the MOTOR-ALWAYS-ON switch (on Auxiliary PCA) to the ALWAYS-ON (center) position.

CAUTION

Avoid accidental contact with the character belt, flywheel, and other rotating Yoke components.

g. Position the TEST switch (on Control-Buffer PCA) to ON, and observe the quality of the Test printout.

h. Draw the top clip guide rearward by means of the index finger (place finger in top guide recessed center hole, figure 4-2A, 3), using the thumb on the bottom clip guide, for leverage. This permits the top guide to be moved rearward evenly, while printing.

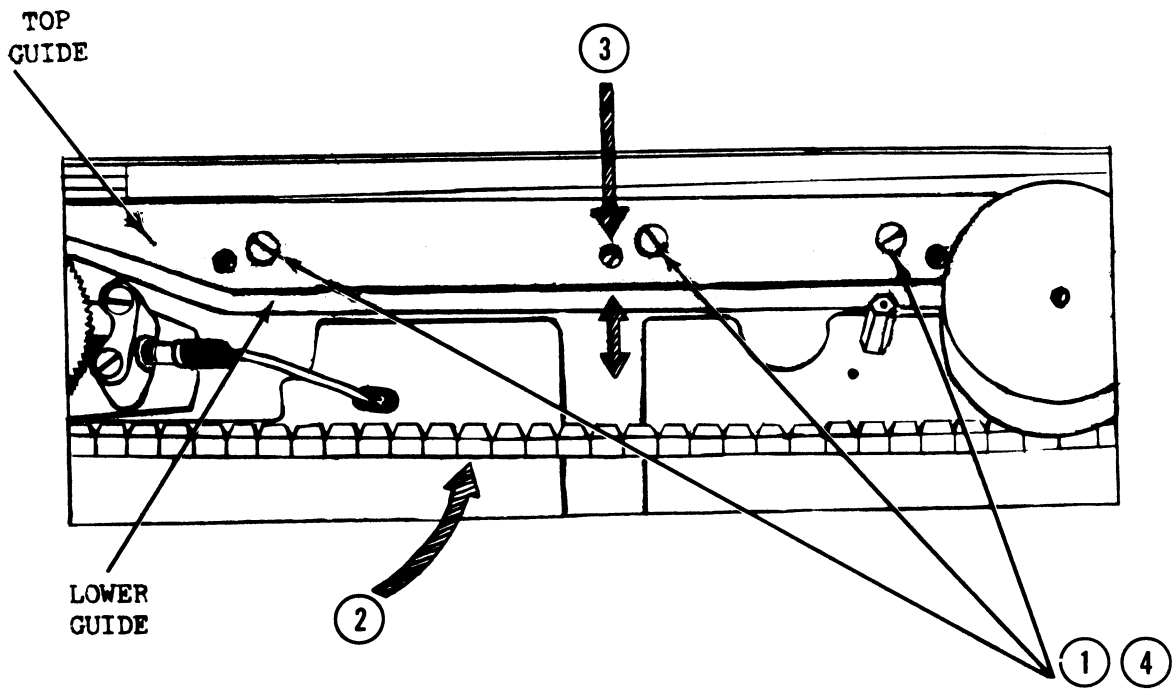


CHARACTER BELT TOP CLIP GUIDE ADJUSTMENT
FIGURE 4-2A

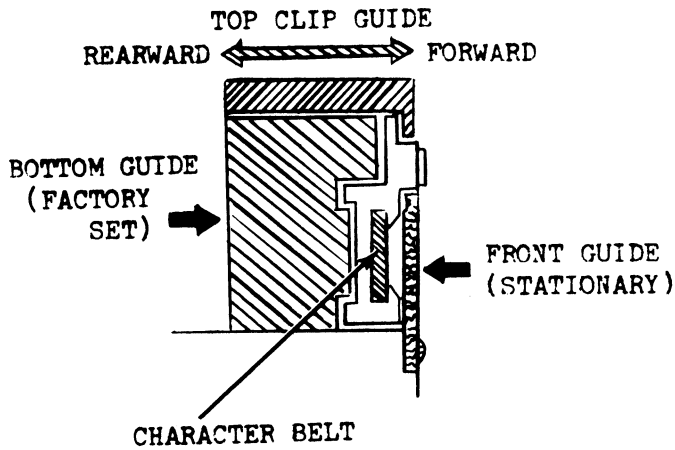


CLIP GUIDE RELATIONSHIPS
FIGURE 4-2B

i. The top clip guide can only be moved rearward by a limited amount, to improve print quality. Too much movement will cause the character belt to bind, while too little drag (movement) results in poor print quality.

j. When best overall print quality is achieved, slowly tighten the middle, non-recessed screw enough to hold the top guide in place.

k. To check the top clip guide adjustment, observe the length of time required for the character belt to coast to a complete stop, once power is interrupted by raising the Yoke latch handle. 3 to 4 seconds is the acceptable average --- less than 3 seconds indicates excessive drag on the character belt, while over 4 seconds results in poor print quality.

l. Once the top guide adjustment is satisfactorily completed, slowly tighten the right and left-hand non-recessed screws (figure 4-2A, 4 ) --- alternate tightening ¼-turn at a time, until both screws are fully tightened. Fully tighten the center non-recessed screw.

m. As a final check, repeat step k. Enter the Internal Test Mode of operation, and verify printout quality, to ensure no adjustment slippage.

n. Check print quality during normal ON-LINE operations, using both single, and 6-part forms and DENSITY ADJUST Control settings.

(THIS PAGE INTENTIONALLY LEFT BLANK)

#### 4.3.1.2 CHARACTER BELT REPLACEMENT

The following steps must be performed in sequence.

a. Remove the lamp cover, flywheel cover, and belt cover as described in Section 4.3.1.1a.

b. Remove the flywheel and drive belt as described in Sections 4.3.1.6 and 4.3.1.7.

c. Remove ten adjacent character clips. Reference Section 4.3.1.3.

d. Remove the character belt from the right hand pulley by slipping the section where the clips have been removed up over the pulley as shown in Figure 4-3.

e. Slip the section where the clips have been removed through the guide as shown in Figure 4-4.

f. The belt may now be disengaged from the left hand pulley and removed from the printer.

g. To replace the belt, reverse the above steps.

CAUTION When replacing the belt on the right hand pulley, the belt must be engaged so that the character clips fit into the large opening on the pulley. The smaller teeth on the pulley will engage the teeth on the belt between each clip.

#### 4.3.1.3 CHARACTER CLIP REPLACEMENT

Reference Figure 4-5 and the following sequential description.

a. Press firmly upward on the bottom of the clip with the thumb.

b. At the same time slip the belt from under one of the top teeth and then the other.

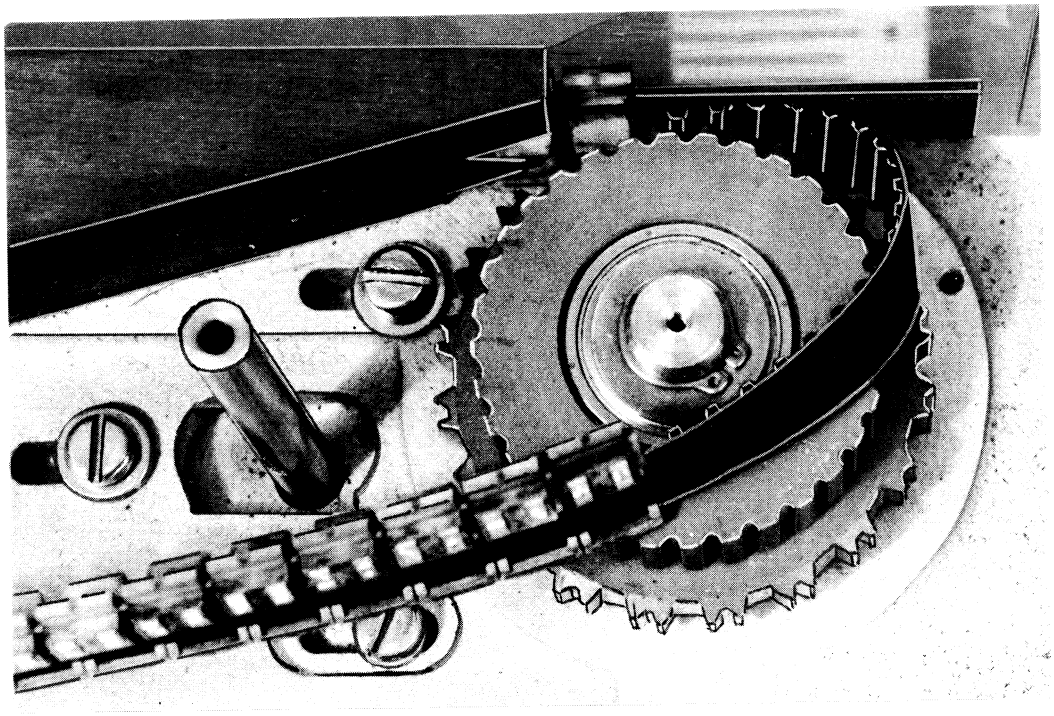

REMOVING CHARACTER BELT FROM DRIVE PULLEY

FIGURE 4-3

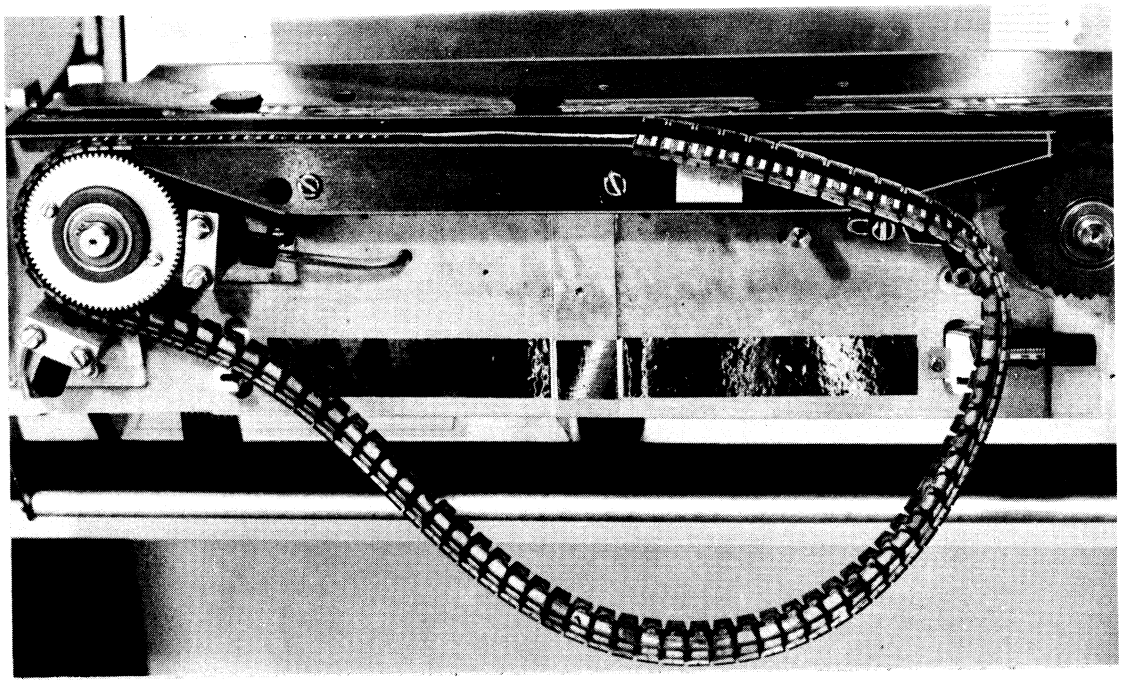

REMOVING BELT FROM GUIDE

FIGURE 4-4

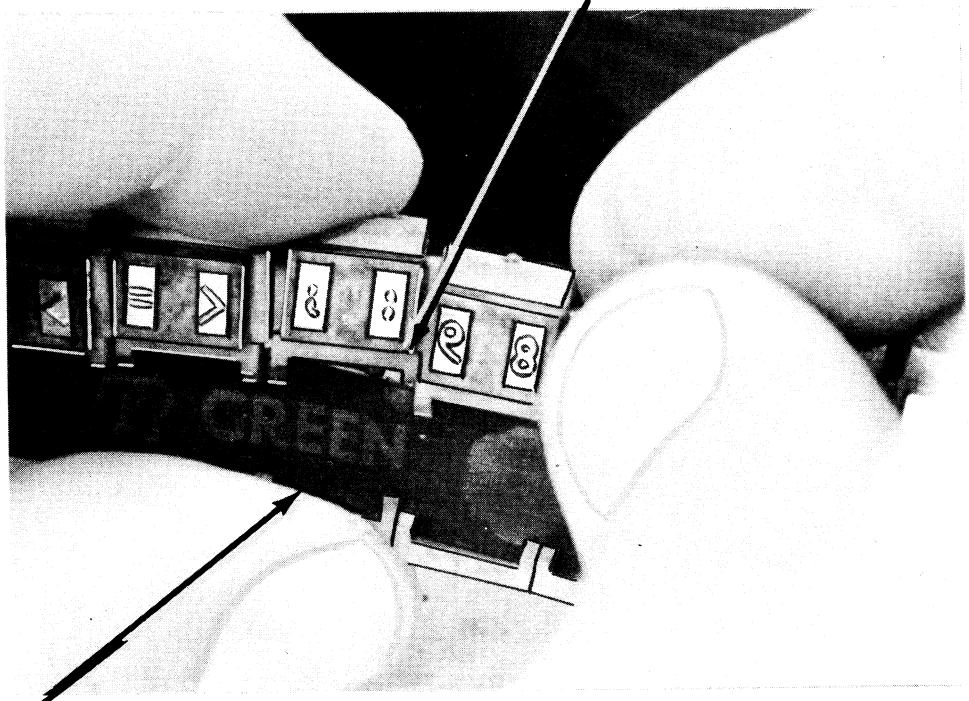


CHARACTER CLIP REPLACEMENT

FIGURE 4-5

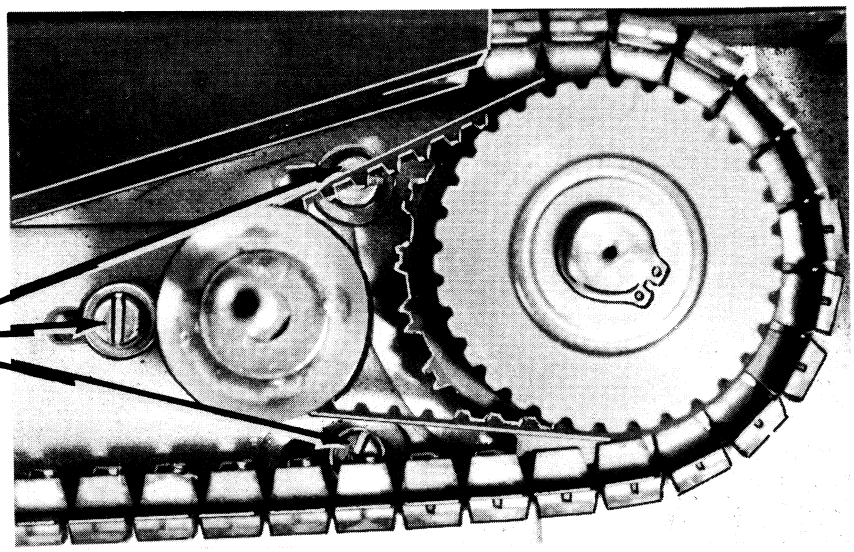


CHARACTER BELT DRIVE MOTOR REPLACEMENT

FIGURE 4-6

CAUTION Excessive pressure will result in broken clip teeth. Clips with one broken tooth are usable on a temporary basis until a replacement is available.

c. To install a character clip, reverse steps a. and b. above.

4.3.1.4 CHARACTER BELT PULLEY AND BEARING ASSEMBLY

The entire pulley, bearing and post assembly must be replaced as a unit. The assembly is held in place by a single pan head screw and lockwasher.

4.3.1.5 CHARACTER BELT DRIVE MOTOR REPLACEMENT

If the drive motor requires replacement it may be changed as follows:

a. Remove the three motor leads from the terminal block under the yoke. Make note of the location of each color wire for later replacement.

b. Remove the flywheel and drive belt as described in Sections 4.3.1.6 and 4.3.1.7.

c. Remove the three motor mounting screws as shown in Figure 4-6. The motor is now free for removal.

d. Replace the motor by reversing steps a. through c. above.

4.3.1.6 CHARACTER BELT FLYWHEEL REPLACEMENT

Using a 5/64" Allen hex key wrench:

a. Remove the two set screws which hold the flywheel to the motor shaft. (Reference Figure 4-7).

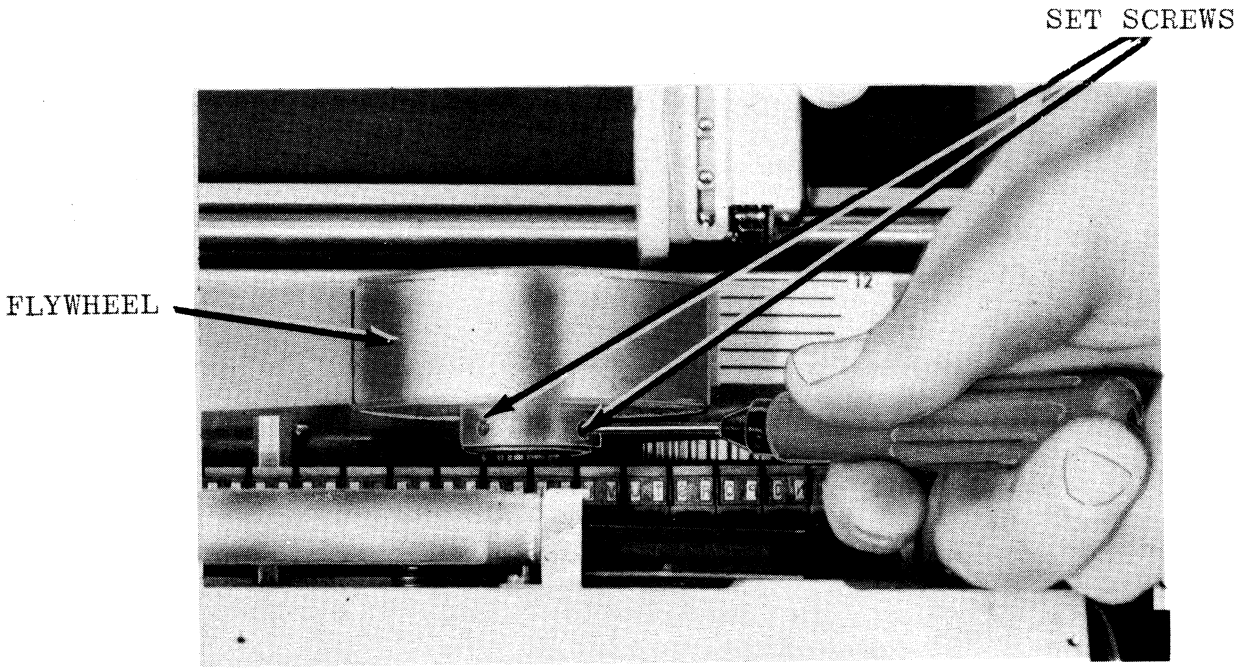


FLYWHEEL REPLACEMENT

FIGURE 4-7

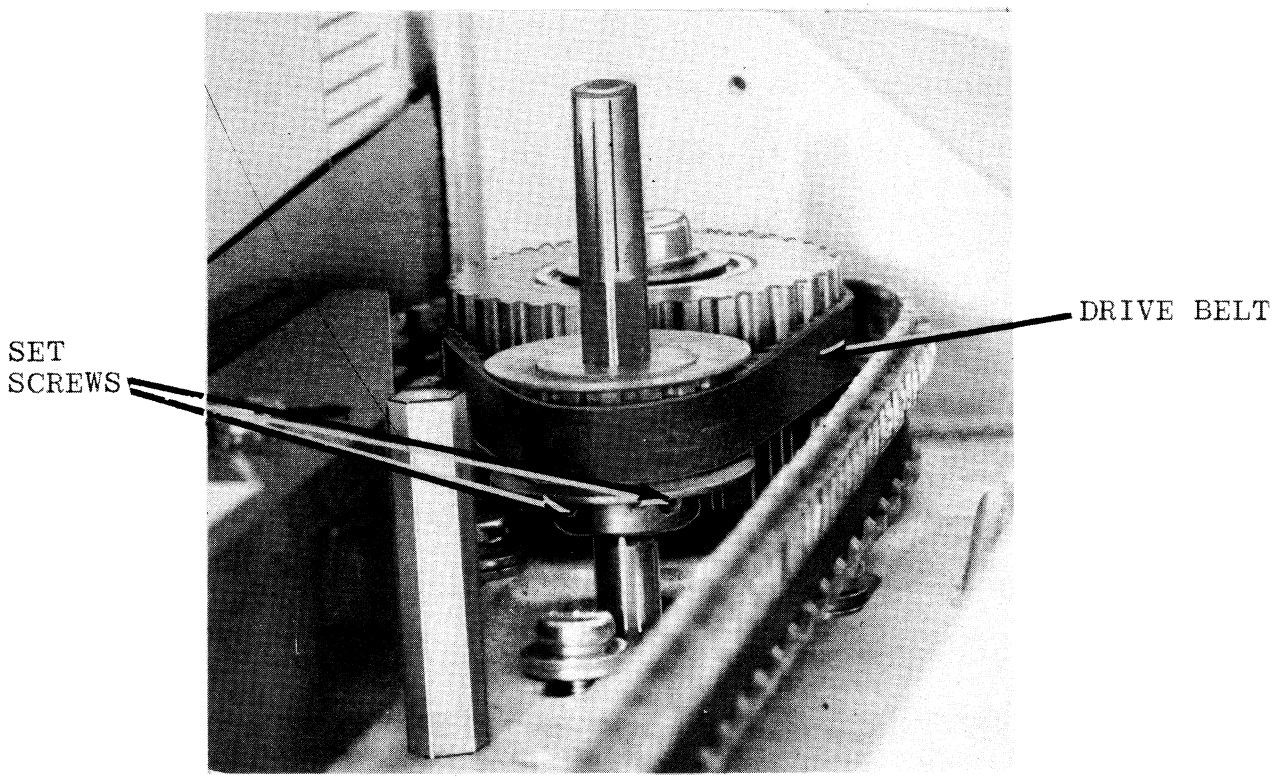


DRIVE BELT REPLACEMENT

FIGURE 4-8

b. Lift the flywheel up and off the motor shaft.

c. To replace the flywheel, reverse steps a. and b. above.

4.3.1.7 CHARACTER BELT DRIVE BELT REPLACEMENT (FIGURE 4-8)

a. Remove the flywheel as described in Section 4.3.1.6. Loosen the drive pulley by loosening the two set screws holding it to the motor shaft.

b. "Walk" the belt off the right hand character belt pulley while pulling up on the drive pulley.

c. Reverse steps a. and b. above to replace the drive belt. See Section 4.3.1.8 for the drive belt tension adjustment.

4.3.1.8 DRIVE MOTOR BELT TENSION

The drive belt between the motor and character belt pulley must be tight in order to impart the full inertia effect of the flywheel to the character belt and ensure uniform character belt velocity during printing. The adjustment is made as follows:

a. Remove the flywheel as described in Section 4.3.1.6.

b. Loosen the three motor mounting screws. (Ref. Figure 4-6)

c. Move the motor assembly until the belt is snug and tighten all three screws securely.

CAUTION Do not adjust the belt excessively tight or the motor bearings will be loaded beyond the normal ratings and the shaft will be distorted.

4.3.2 RIBBON TRANSPORT SYSTEM

4.3.2.1 RIBBON REVERSE SWITCHES (REFERENCE FIGURE 4-9)

The ribbon reverse switches are located on each side of the

yoke frame. The switch is tripped by the reversing bumpers at each end of the ribbon. When adjusted correctly the switch arm will be deflected slightly but will not be tripped by the ribbon idler when the yoke is closed. To adjust, proceed as follows:

a. Close and lock the yoke.

b. Insert a .015 inch feeler guage between the switch lever and ribbon idler. The ribbon shaft on the side being deflected must move freely.

c. Perform the same procedure on the other switch.

d. If the switch does not de-activate the ribbon shaft, move the switch by loosening the holding screws. Insert a .015 inch guage, and rotate the switch forward until the ribbon shaft rotates freely. Tighten the screws and remove the guage.

e. Insert a .005 inch feeler guage between the switch lever and ribbon idler. This thickness should not cause the ribbon shaft to move freely.

NOTE: An audible click will be heard when ribbon clutches are being actuated and de-actuated by the ribbon reversing switches.

4.3.2.2 RIBBON TRACKING (FIGURES 4-9 and 4-10)

Ribbon tracking adjustments are required if the ribbon winds on the spool unevenly or exhibits foldover problems. Prior to this adjustment, the ribbon idlers located near each ribbon reverse switch must be checked for squareness to the yoke. If either idler is even slightly bent, the ribbon will not track properly. To adjust ribbon tracking, proceed as follows:

a. Open the yoke and loosen the ribbon guide retaining screws.

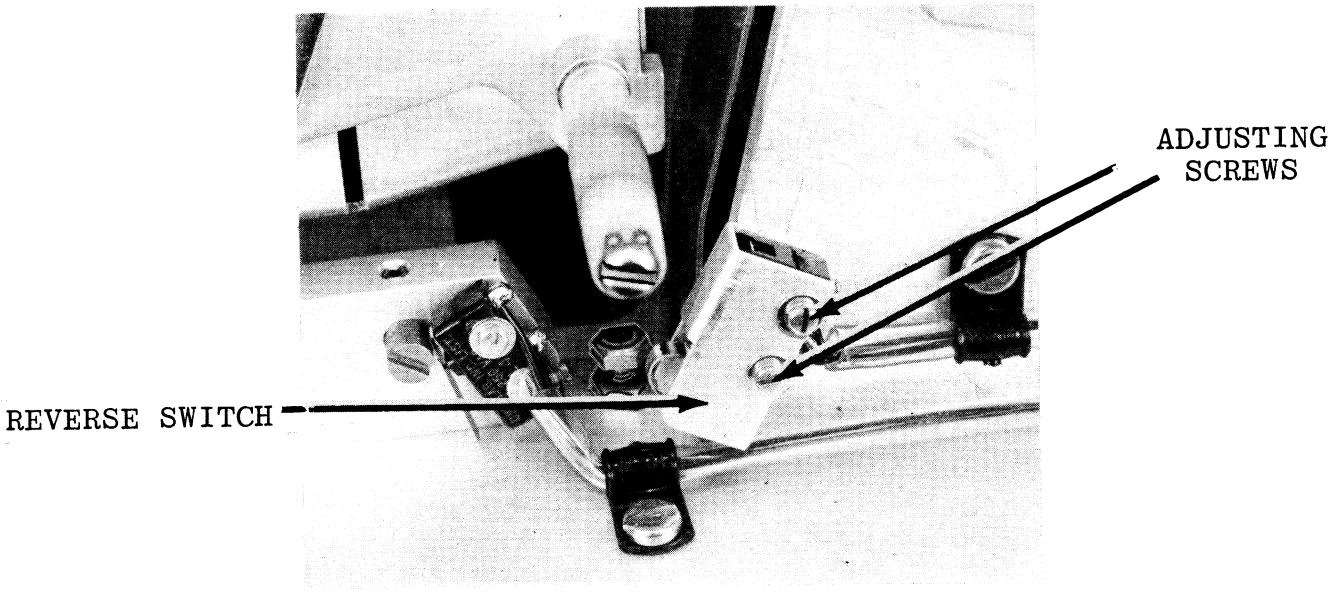


RIBBON REVERSE SWITCH ADJUSTMENT

FIGURE 4-9

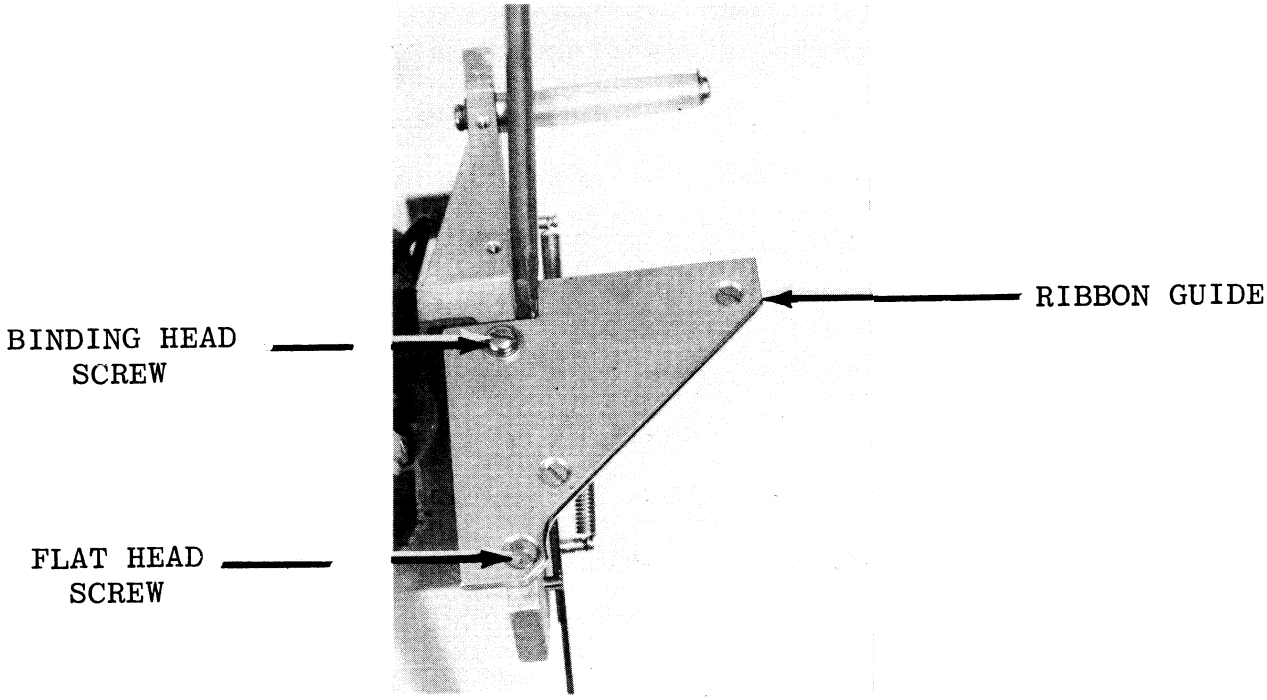


RIBBON TRACKING ADJUSTMENT

FIGURE 4-10

Maintain pressure on the flat head screw and use it as a pivot point.

b. To correct folding on the outside of the spool, move the top of the guide away from the yoke side frame. Reverse the procedure for folding to the inside of the spool.

c. Tighten the guide retaining screws.

d. Position the ribbon in the center of the spool, idler and guide. Rotate the spool and verify correct tracking.

e. Repeat the above procedure for the opposite spool.

f. If the ribbon still fails to track, check the ribbon idlers. The center of the crown should be closer to the yoke on the left idler than on the right idler. If not, reverse the roll.

4.3.2.3 RIBBON DRIVE MOTOR

The ribbon drive system contains two motors, one for each direction of ribbon travel. The motors are identical and contain an internal planetary gear reduction mechanism and a disengagement mechanism which allows the unspooled side to rotate freely independent of the gear train. The replacement procedure is as follows:

a. Disengage the shaft coupling and partially remove the drive shaft. Reference Figure 4-11. NOTE: The shaft need only be slipped out far enough to clear the motor.

b. Remove the two screws which hold the motor hanger bracket to the yoke.

c. Remove the motor and bracket assembly far enough to gain access to the terminal block.

d. Remove the motor leads from the terminal block. Note the

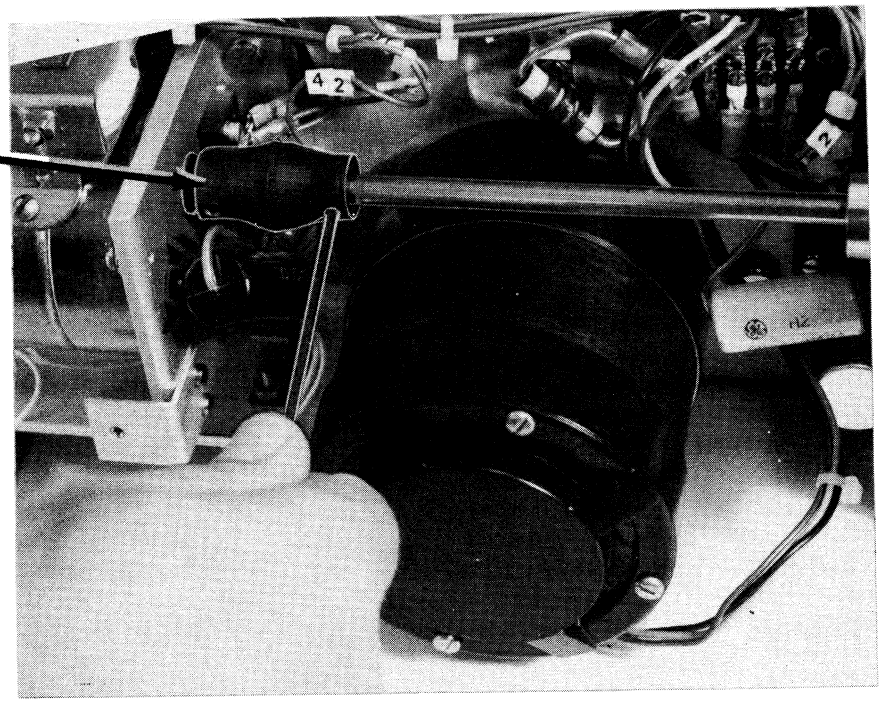


DISENGAGEMENT OF SHAFT COUPLING

FIGURE 4-11

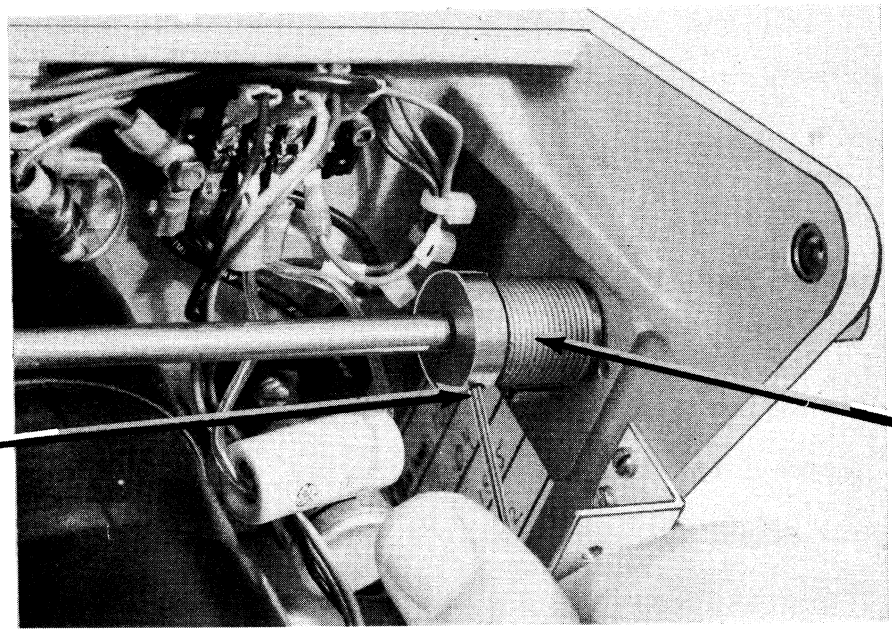


RIBBON DRAG BRAKE REMOVAL

FIGURE 4-12

position of the leads at the terminal block for later replacement.

e. Remove the motor from the bracket by removing the three attachment screws.

f. Install a new motor by reversing steps a. through e. above.

4.3.2.4 RIBBON DRAG BRAKES (FIGURE 4-12)

The drag brakes, one right hand and one left hand, keep the ribbon under a tension by providing a controlled drag on the unspooling side. Replacement of the non-adjustable spring wrap brake is as follows:

a. Release the shaft coupling by loosening the set screw.

b. Remove the set screws holding the drag brake in place.

c. Slip out the shaft and remove the drag brake components from the shaft.

d. Replace the new drag brake by reversing the above procedure. NOTE: The coil sense of the right brake is installed opposite of that of the left brake.

4.3.2.5 RIBBON DRIVE SHAFTS AND BEARINGS (FIGURE 4-13)

Replacement is as follows:

a. Disengage the coupling.

b. Disengage and remove the drag brake components as described in Section 4.3.2.4.

c. Remove the ribbon drive shaft.

d. As required, the bearing can now be removed from the yoke casting after the shaft has been removed.

e. For replacement, reverse steps a. through d. above.

### 4.3.3 YOKE MECHANISMS

#### 4.3.3.1 YOKE HEIGHT ADJUSTMENT (FIGURE 4-14)

This adjustment determines the vertical relationship between characters on the belt and the hammers. If the height is incorrect, clipping at the top or bottom of an entire line will be observed. If the yoke is not supported evenly on both sides, occasional clipping at the top or bottom of characters towards one end of a line will be observed. To test for an "out of adjustment" condition, proceed as follows:

a. Disable the "out of paper" switch and set the density adjust knobs for good single part printing.

b. Printing directly on the hammer faces, run the printer for a few lines.

c. Open the yoke and examine the location of printing on each hammer face. If the printed characters are not centered vertically on the hammers, proceed as follows:

d. Loosen the locking set screws on both sides for the yoke latch pins and release the hook tension by rotating the eccentric locking pin.

e. Loosen the yoke safety switch and move the switch away from the latch hook to prevent damage to the switch. Short the switch with a clip lead so that the belt motor will run during adjustments.

f. Loosen the lock nut on the right yoke height adjusting screw and screw it down, permitting the yoke to rest on the left side only.

g. Adjust the yoke height, using the left adjusting screw only. Print several lines on the hammer faces after each

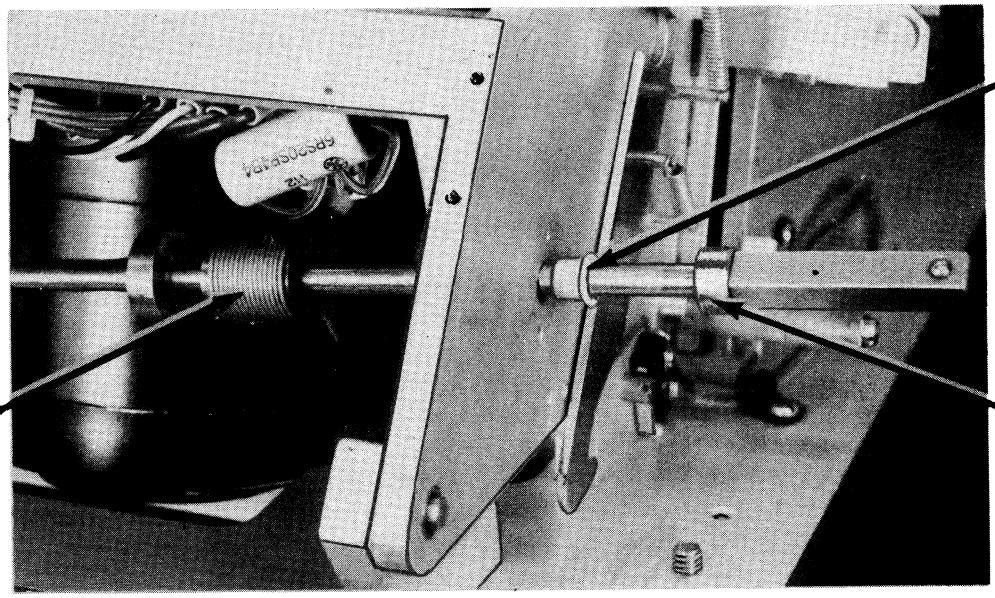


DRIVE SHAFT REMOVAL

FIGURE 4-13

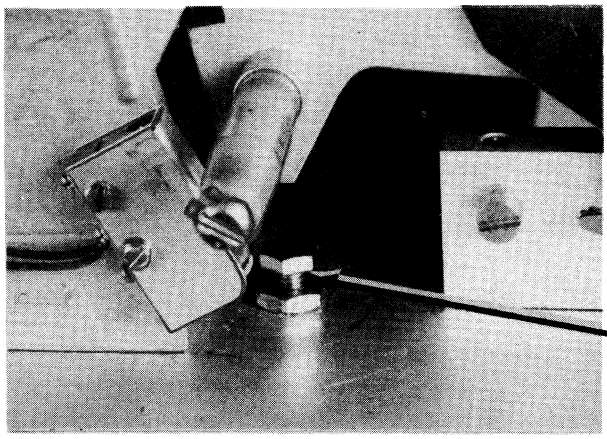


YOKE HEIGHT ADJUSTMENT

FIGURE 4-14

adjustment until the proper yoke height is achieved. Lock the left yoke height adjusting screw securely.

h. Cut two strips of paper about 1/2 inch wide by 2 inches long. Place one strip over each adjusting screw and lower the yoke.

i. Adjust the right screw until the yoke rests evenly on both screws. This point can be determined by pulling out the paper strips on both sides. The amount of force required to pull the paper strips should be the same for both sides.

j. Lock the right yoke height adjusting screw securely. Remove the jumper across the yoke safety switch and adjust the yoke latch pins and yoke safety switch as described in Sections 4.3.3.2 and 4.3.3.3.

4.3.3.2 YOKE LATCH ADJUSTMENT (FIGURE 4-14)

The yoke latch arrangement consists of an eccentric pin and a hook on each side of the yoke frame. For proper operation, the yoke must be securely held down when latched. A slight resistance should be felt as the latch arm is lowered into position. If the latch is adjusted too tightly, the latch arm cannot be fully lowered and therefore may open when the yoke is impacted by hammers during printing. The full adjustment procedure follows:

a. Loosen the yoke safety switch adjusting nut and back the switch away from the hook to prevent damage during the adjustment procedure.

b. Slightly loosen the locking screw for the latch pin on both sides.

c. With the yoke closed and the latch arm in the latched position, turn the right pin clockwise and the left pin counter-clockwise until snug.

d. Lock each pin into position by tightening the locking screws, and check for proper adjustment as described above.

4.3.3.3 YOKE SAFETY SWITCH ADJUSTMENT (FIGURE 4-15)

The right hand yoke latch hook should trip the yoke safety switch when the latch arm bar is approximately 3/4 inch from the latched position. As a function of this switch, the belt motor will shut down when the yoke handle is pulled up about one (1) inch from it's rest position. Adjustment is as follows:

a. With the yoke latched, loosen the yoke safety switch and bring it up close enough to cause the belt motor to run.

b. Tighten the switch hardware.

c. Raise and lower the yoke handle several times to ensure proper operation.

CAUTION Verify that the switch is not too close to the yoke hook. Damage will result from excessive pressure.

4.3.3.4 YOKE PIVOT ADJUSTMENT (FIGURE 4-16)

A loose yoke pivot exhibits problems typical of a loose hammer bar. The left yoke pivot secures the yoke assembly to the base plate and prevents left to right movement of the yoke assembly. To determine if adjustment is necessary, grasp the yoke by both side plates and attempt to move it from side to side. If motion is felt, proceed as follows:

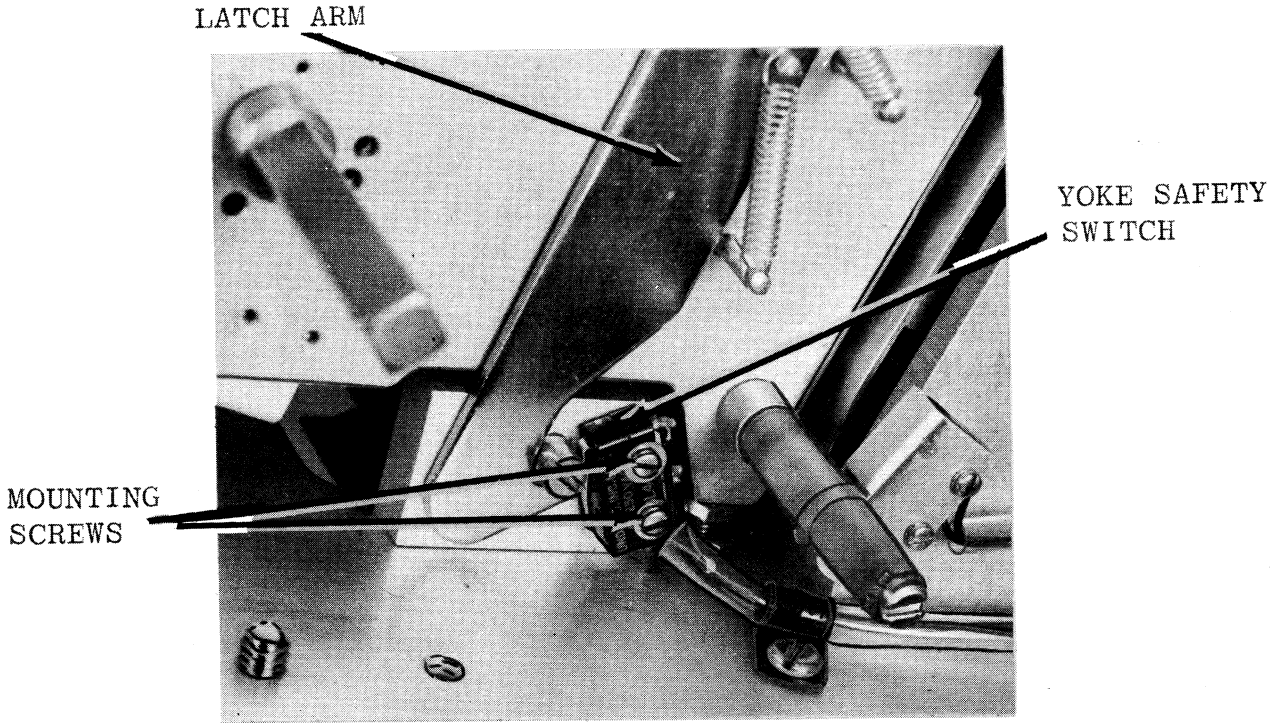


YOKE SAFETY SWITCH ADJUSTMENT

FIGURE 4-15

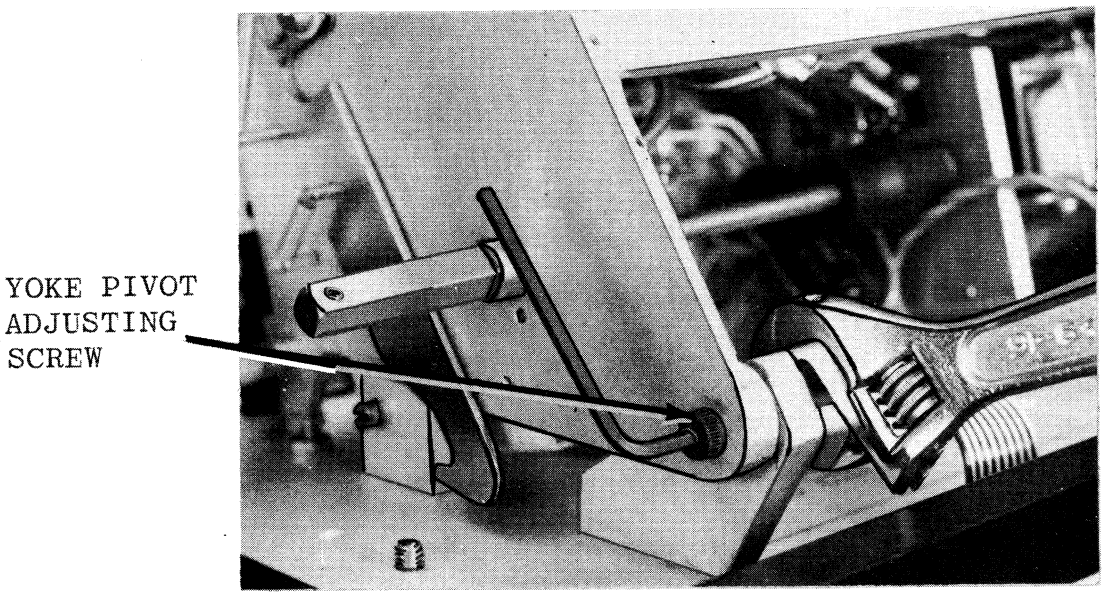


YOKE PIVOT ADJUSTMENT

FIGURE 4-16

a. Loosen the lock nut securing the yoke pivot adjusting screw on the left side of the yoke.

b. Tighten the adjusting screw until there is no side play but the yoke will open and close freely.

c. Tighten the locking nut.

4.3.3.5 YOKE COUNTERBALANCE STOP ADJUSTMENT (FIGURE 4-17)

The yoke stop should rest squarely against the counter balance when the yoke is fully open. Adjust as follows:

a. Loosen the two screws which secure the yoke stop to the base plate.

b. Adjust the yoke opening until the yoke counter balance body is parallel with the yoke stop.

c. Tighten the two screws on the stop.

4.3.4 PAPER ADVANCE TRANSPORT SYSTEM.

4.3.4.1 PAPER CLAMPS

Prior to a line being printed, the paper clamps are extended and hold the paper to ensure no misregistration. With the yoke open and power on, the paper clamps should be flush with the yoke cover. Prior to a paper advance cycle the clamps are retracted and must not impede paper motion. With power on and the yoke closed, six part paper should pass freely between the clamps and the hammer bar cover, with the density control set at 6. As required, the adjustment procedures are as follows:

a. Turn on power, open the yoke and verify that the paper clamps are retracted. The foam vinyl friction pads

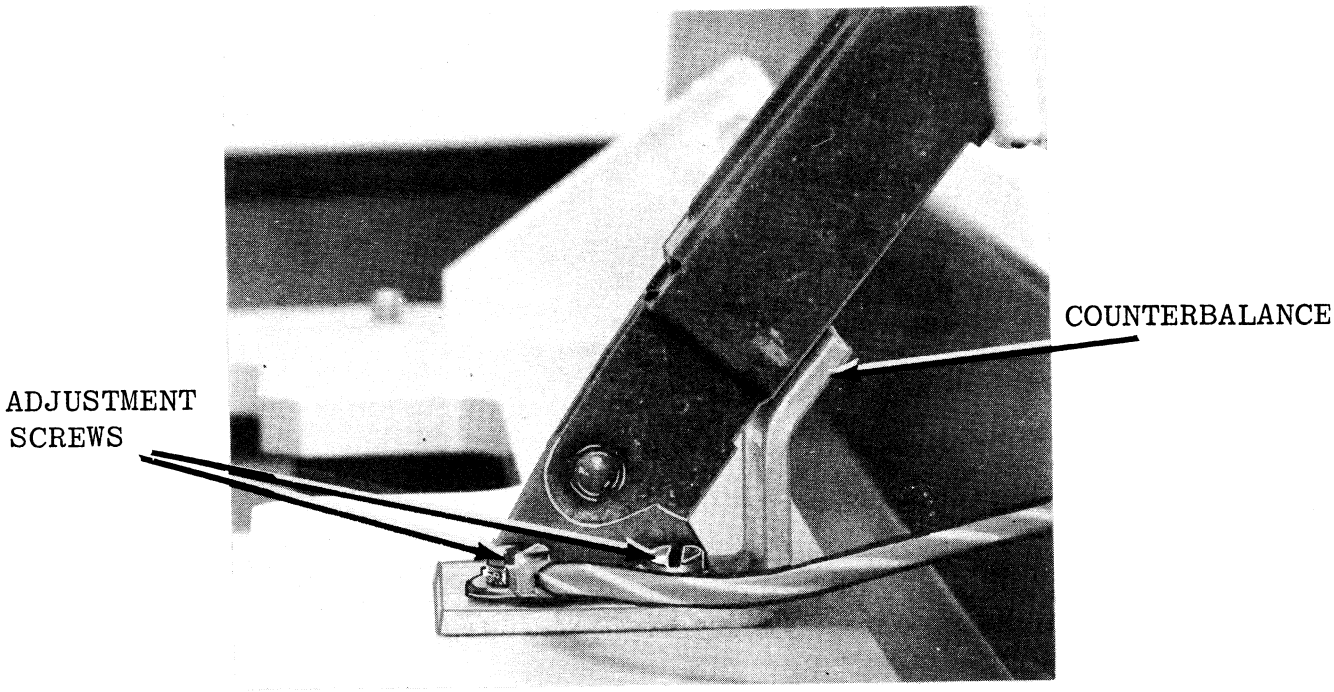


COUNTERBALANCE STOP ADJUSTMENT

FIGURE 4-17

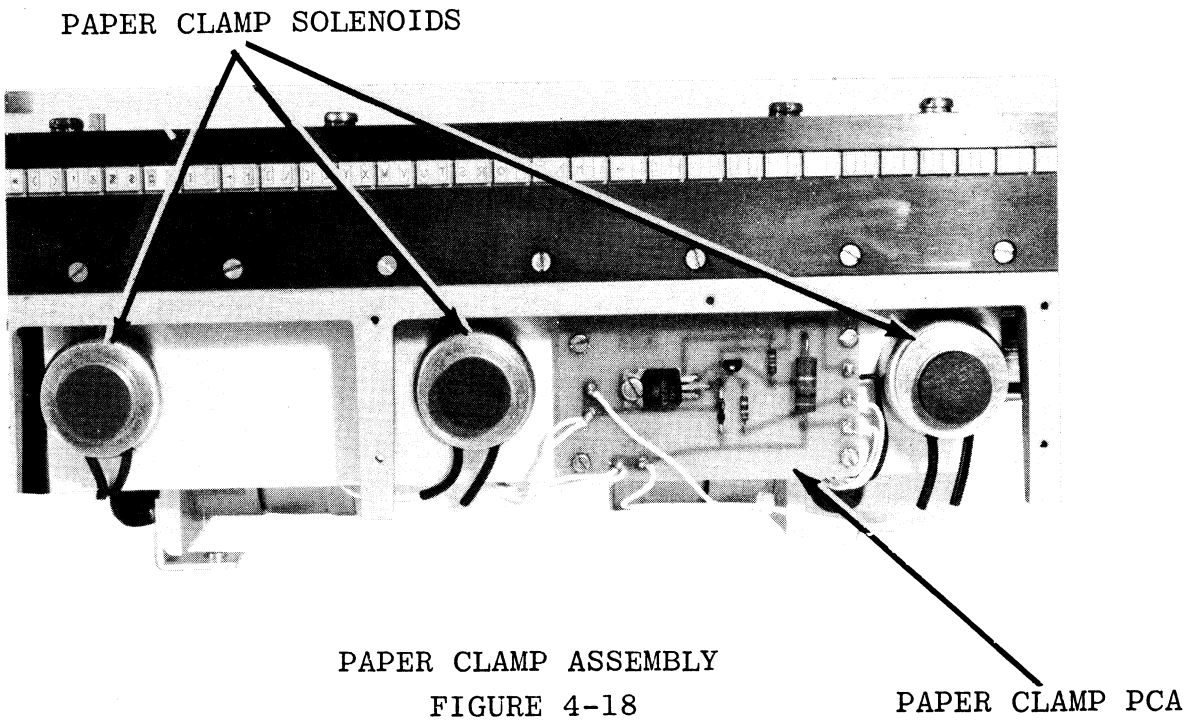


PAPER CLAMP ASSEMBLY

FIGURE 4-18

should all be even with or slightly below the yoke cover.

b. Loosen the two screws which secure the paper clamp assembly.

c. Adjust the clamps to meet the specifications outlined in the paragraph above. Tighten the screws.

With the power off and the yoke open, the paper clamp solenoids should be checked for free operation. All three should move freely when depressed. If binding or stickiness is apparent, proceed as follows to replace. (Reference Figures 4-18 and 4-19)

a. Turn off power, open the yoke and remove the cover plate by removing nine flat head screws. The solenoid bracket and paper clamp PCA will be exposed.

b. Remove the two screws securing the bracket to the yoke.

NOTE: After the screws are loosened with a conventional screwdriver, they should be removed using a screw-holding screwdriver. This type screwdriver will be required later when the screws are replaced.

c. Unsolder the leads of the solenoids from the paper clamp PCA.

d. Remove the defective solenoid from the bracket by removing two nuts from the solenoid mounting studs.

e. To replace a paper clamp solenoid, reverse steps a. through e. above.

4.3.4.2 OUT OF PAPER SWITCH (FIGURE 4-20)

The out of paper switch detects the end of paper several inches below the hammers. The switch is located under the hammer

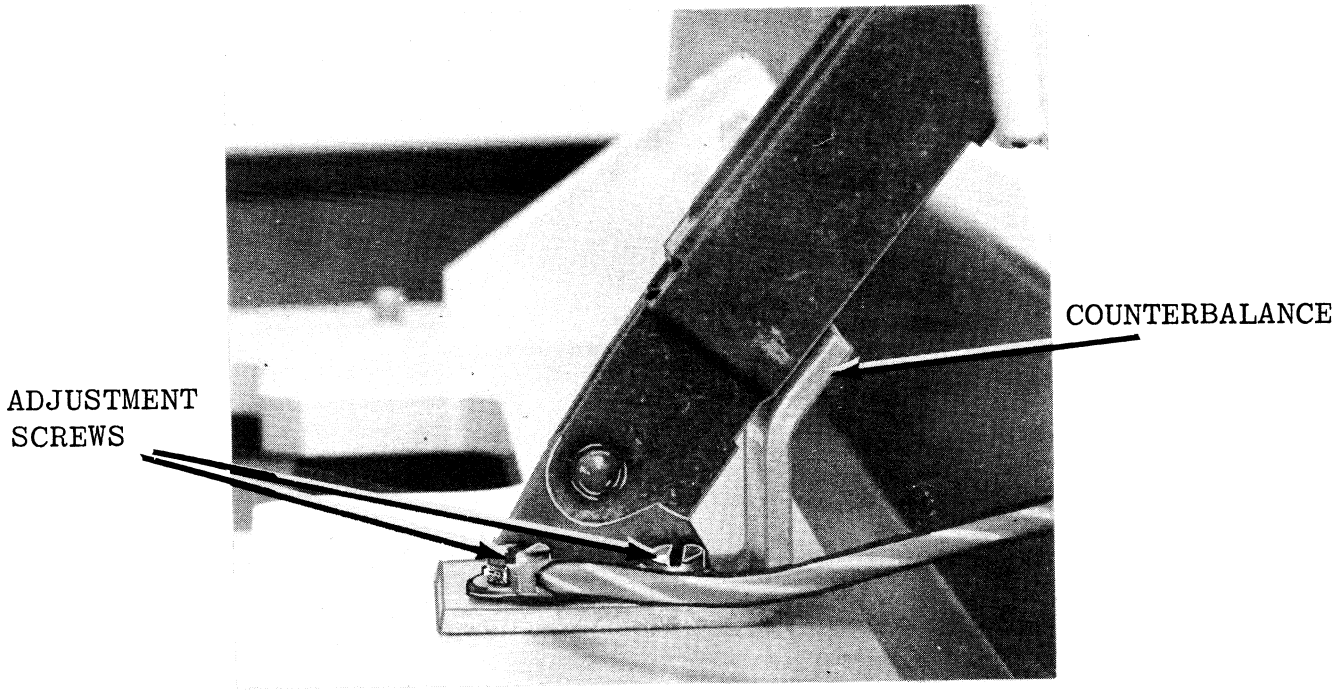


COUNTERBALANCE STOP ADJUSTMENT

FIGURE 4-17

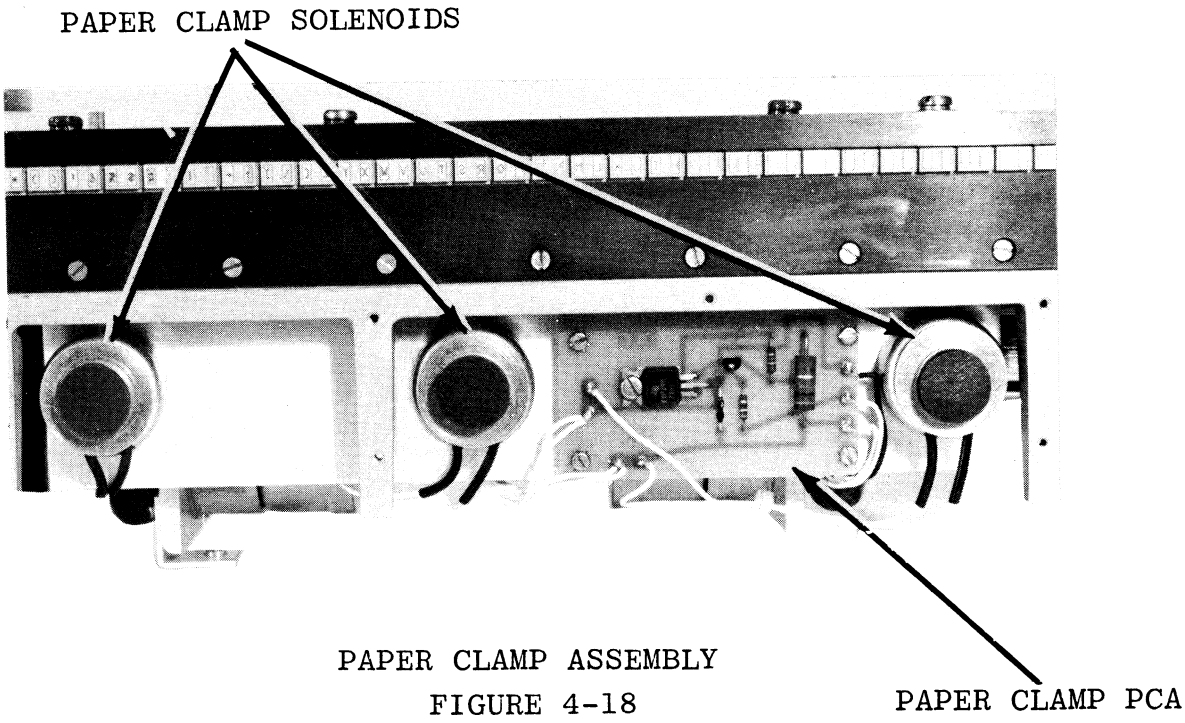


PAPER CLAMP ASSEMBLY

FIGURE 4-18

should all be even with or slightly below the yoke cover.

b. Loosen the two screws which secure the paper clamp assembly.

c. Adjust the clamps to meet the specifications outlined in the paragraph above. Tighten the screws.

With the power off and the yoke open, the paper clamp solenoids should be checked for free operation. All three should move freely when depressed. If binding or stickiness is apparent, proceed as follows to replace. (Reference Figures 4-18 and 4-19)

a. Turn off power, open the yoke and remove the cover plate by removing nine flat head screws. The solenoid bracket and paper clamp PCA will be exposed.

b. Remove the two screws securing the bracket to the yoke.

NOTE: After the screws are loosened with a conventional screwdriver, they should be removed using a screw-holding screwdriver. This type screwdriver will be required later when the screws are replaced.

c. Unsolder the leads of the solenoids from the paper clamp PCA.

d. Remove the defective solenoid from the bracket by removing two nuts from the solenoid mounting studs.

e. To replace a paper clamp solenoid, reverse steps a. through e. above.

4.3.4.2 OUT OF PAPER SWITCH (FIGURE 4-20)

The out of paper switch detects the end of paper several inches below the hammers. The switch is located under the hammer

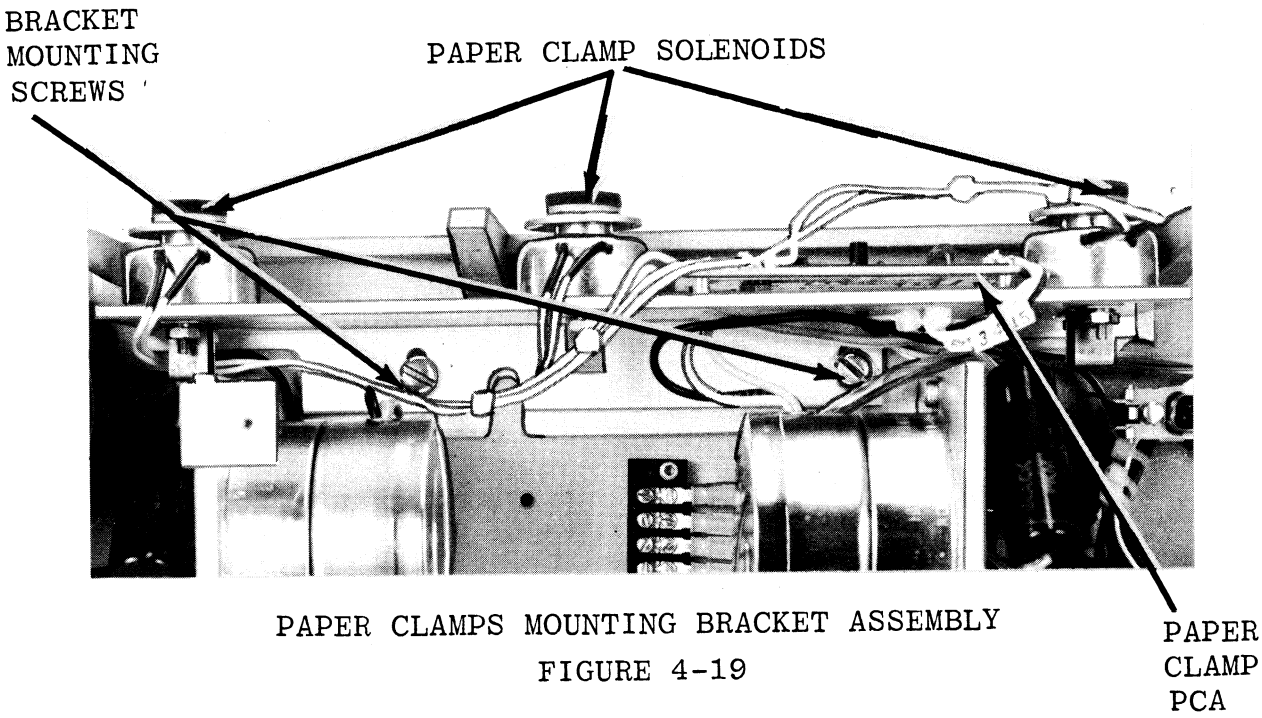


PAPER CLAMPS MOUNTING BRACKET ASSEMBLY

FIGURE 4-19

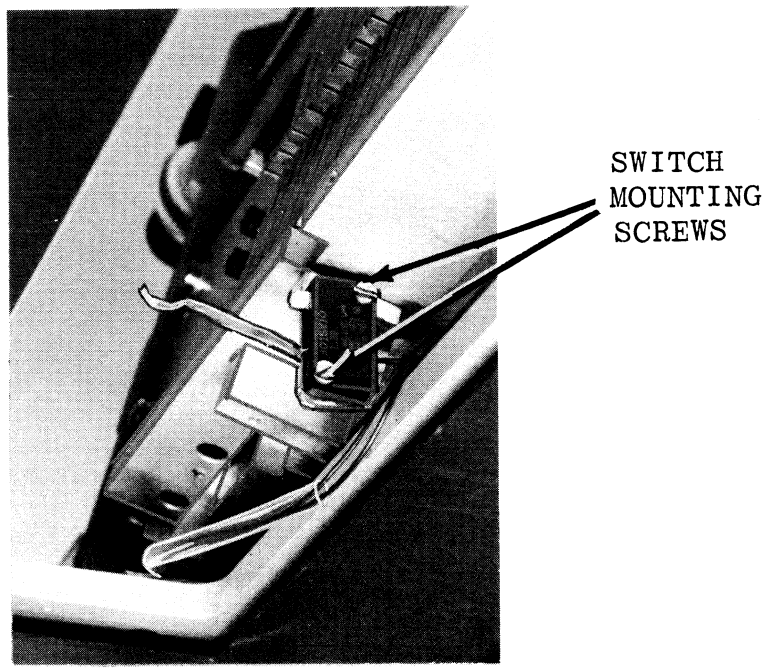


OUT OF PAPER SWITCH

FIGURE 4-20

bar and is adjusted by pivoting the top of the switch toward or away from the yoke.

a. Remove the hammer bar cover to expose the hammers and the Out of Paper switch.

b. Loosen the Out of Paper switch mounting screws using the hammer bar cover to check for interference. Move the switch toward or away from the yoke until the switch extinguishes the Paper Out light when depressed within approximately 1/8 inch of the hammer bar cover and turns on the Paper Out light when the switch arm extends through the hammer bar cover.

   NOTE: The yoke safety switch must be closed after the Out of Paper switch in order to extinguish the Alarm lamp.

c. Tighten the Out of Paper switch mounting screws and replace the hammer bar cover.

4.3.4.3 PAPER TRACTOR MECHANISM

Paper is mechanically advanced through the operation of the paper drive motor and the belt-driven paper tractors.

The toothed tractors, which accomplish paper movement, are mounted on three shafts at the top of the main frame. The lower of these, a square shaft, couples the tractors to the paper drive motor through a pulley and belt on the left side. The tractor elements may be positioned (position clamp control loosened) along the rods to accommodate different paper widths.

4.3.4.3.1 Paper Tractor Phasing

Although proper tractor phasing is established at the factory, field removal and replacement of either or both tractors requires that correct phasing relationships be re-established. Figure 4-21 shows a typical tractor, identifying phasing dot location --- in order to ensure paper drive synchronization it is necessary that the phasing dots on both tractors point in the <u>same direction</u>! For example, if replacing one tractor, observe the orientation of the phasing dot on the remaining (installed) tractor --- rotate the drive hub on the new tractor so that the phasing dot points in the same direction, and install the unit on the drive and support shafts being careful not to change phasing dot alignment position!

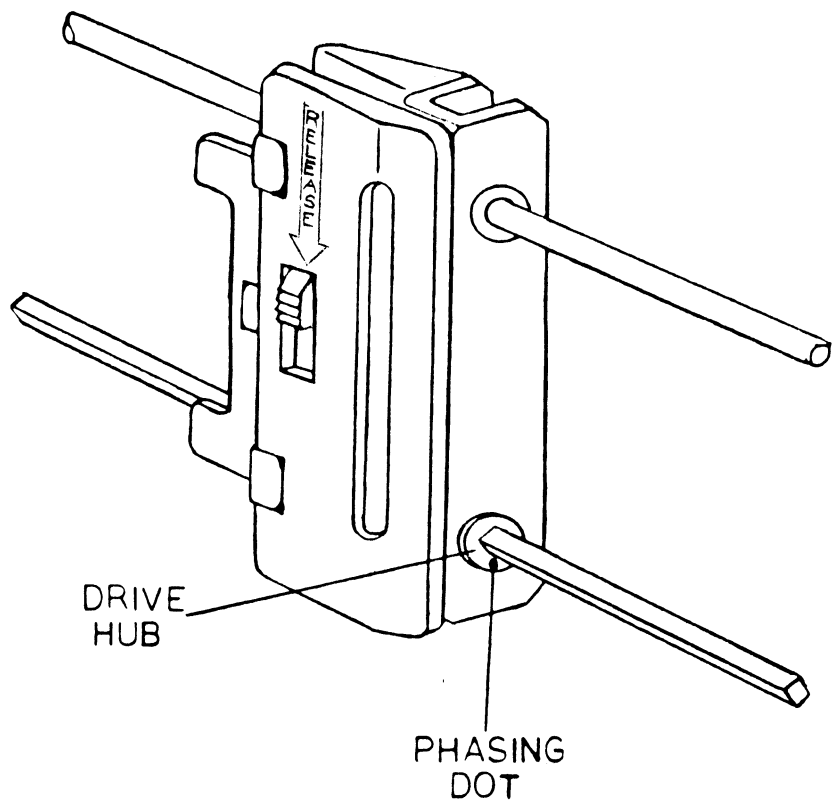


TRACTOR PHASING DOT (TYPICAL)
FIGURE 4-21

4.3.4.3.2 PAPER TRACTOR REPLACEMENT

a. Slip the drive belt from the pulley on the left hand side of the printer.

b. Remove the retaining ring and collar from the right hand side of the tractor drive shaft.

c. Remove the tractor drive shaft from the printer by sliding it left, being careful not to lose the washers which are located on the portion of the shaft between the side plates.

d. Loosen the position clamp control on the left hand tractor.

e. Slide the left hand tractor and plastic stiffening plates as far left as possible.

f. Loosen the locking set screw at the right end of the tractor support shaft with a 5/64 inch Allen hex key wrench.

g. Slide the support shaft to the left until it clears the right hand side plate.

h. Loosen the position clamp control on the right hand tractor.

i. Gently deflect the support shaft forward until it clears the front of the right hand side plate.

j. Remove the tractor by sliding it to the right.

k. Replace the support shaft in the right hand stand and secure.

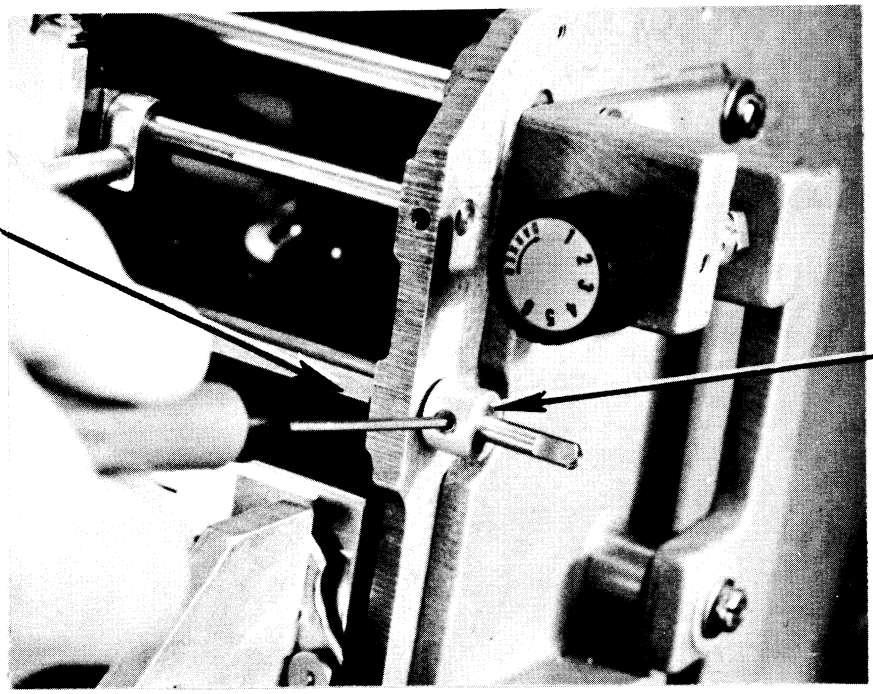


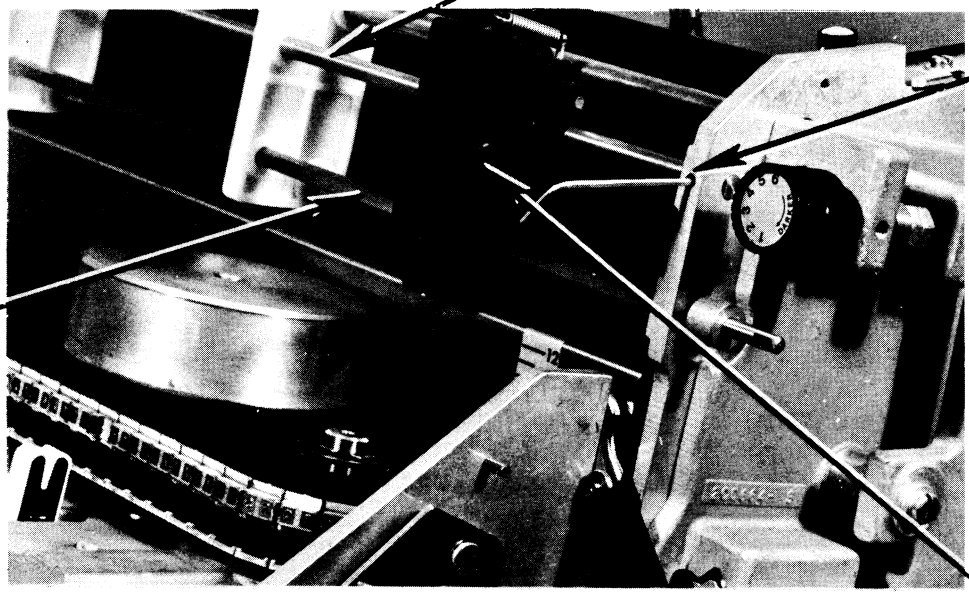


PAPER TRACTOR REPLACEMENT
FIGURE 4-22

m. Reverse steps d through k to replace the left hand tractor.

n. Replace the tractor drive shaft, washers, snap rings, and collar.

o. Remount the timing belt on the tractor drive pulley.

p. Space the tractors and plastic stiffening plates to the proper positions.

4.3.4.4 PAPER ADVANCE MOTOR

The paper is advanced with a three phase variable reluctance stepping motor. Twenty four steps move the paper one (1) inch. (At six lines per inch four steps are used, while at eight LPI three steps are used.) A series resistor is employed to supply detent torque to maintain the paper in a stationary position when not advancing. The resistor is bypassed when advancing paper in order to supply maximum torque. Should replacement become necessary for various components of the paper advance motor system, refer to the following:

4.3.4.4.1 PAPER ADVANCE MOTOR REPLACEMENT (FIGURE 4-23)

a. Remove the paper advance belt and pulley as described in Section 4.3.4.4.2. Loosen the set screw that secures the paper advance motor pulley to the shaft and remove the pulley.

b. Unplug the motor from the paper advance PCA.

c. Loosen the three clamps so that they rotate and the clamping lips will release the locking ring on the motor.

d. The motor can be removed by pulling away from the mounting plate.

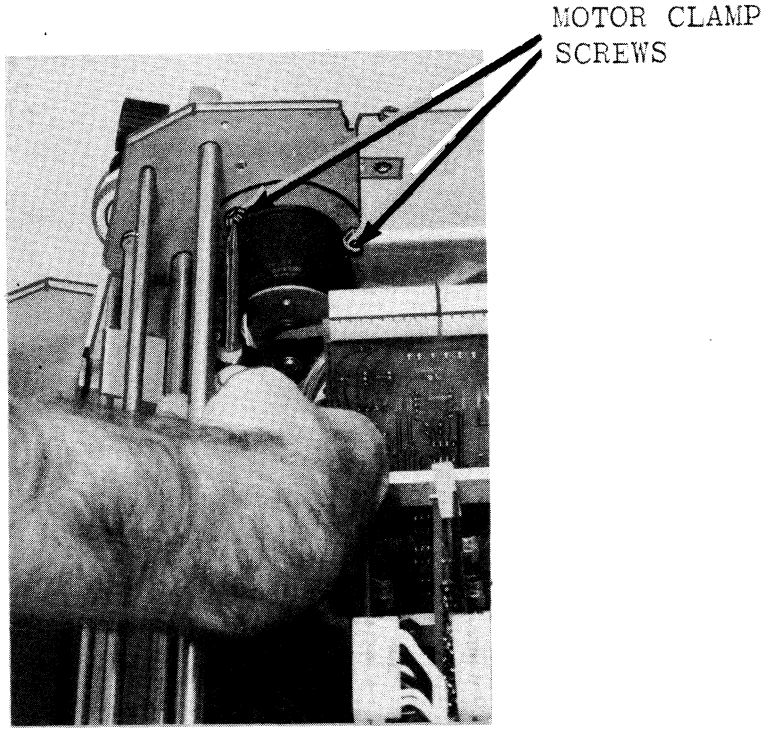


PAPER ADVANCE MOTOR REPLACEMENT

FIGURE 4-23

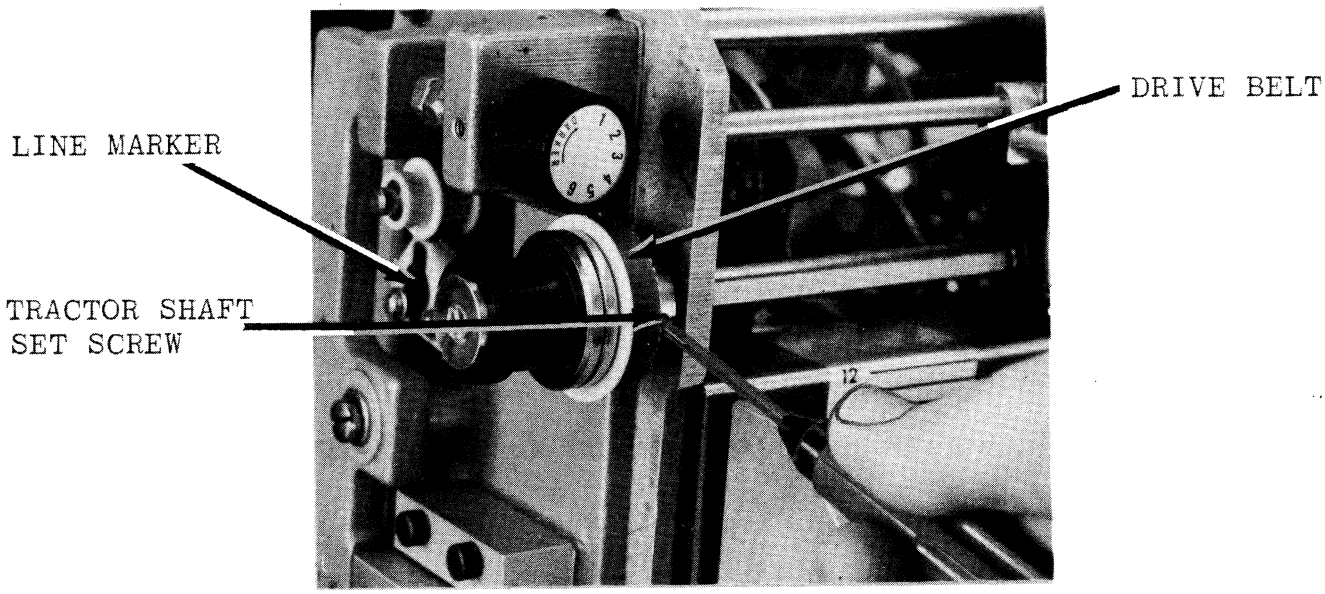


DRIVE BELT AND PULLEY REPLACEMENT

FIGURE 4-24

e. Reverse the above procedure to mount the stepper motor.

#### 4.3.4.4.2 PAPER ADVANCE DRIVE BELT AND PULLEY REPLACEMENT (FIGURE 4-24)

a. Loosen the set screws on both the tractor shaft and motor shaft with a 5/64 inch Allen hex key wrench.

b. With a sharp pencil or tool carefully scribe the location of the line marker on the left hand side plate.

c. Remove the screws retaining the line marker.

d. Lower line marker until it clears line marker disc.

e. Slip off both pulleys and the belt.

f. To replace slip both pulleys and belt over shafts. Be sure the flats on the shaft line up with the locking set screws.

g. Securely tighten set screws.

h. Position and secure line marker in its original position.

### 4.3.5 HAMMER BAR MECHANISMS

All hammers are mounted on a one piece precision machined aluminum casting. The hammer bar assembly is attached to the printer frame by two fiberglass flexures. The bar consists of a mounting arrangement for the hammers, a flight time adjustment mechanism for each hammer, and a stepping motor with associated sensing electronics to control the discrete positions of the oscillating hammer bar.

#### 4.3.5.1 HAMMER BAR REPLACEMENT (FIGURE 4-25)

Should it become necessary to either remove or replace the hammer bar, adhere to the following procedure.

a. Remove the UL cover by releasing the four one-quarter turn fasteners and remove the three hammer driver boards.

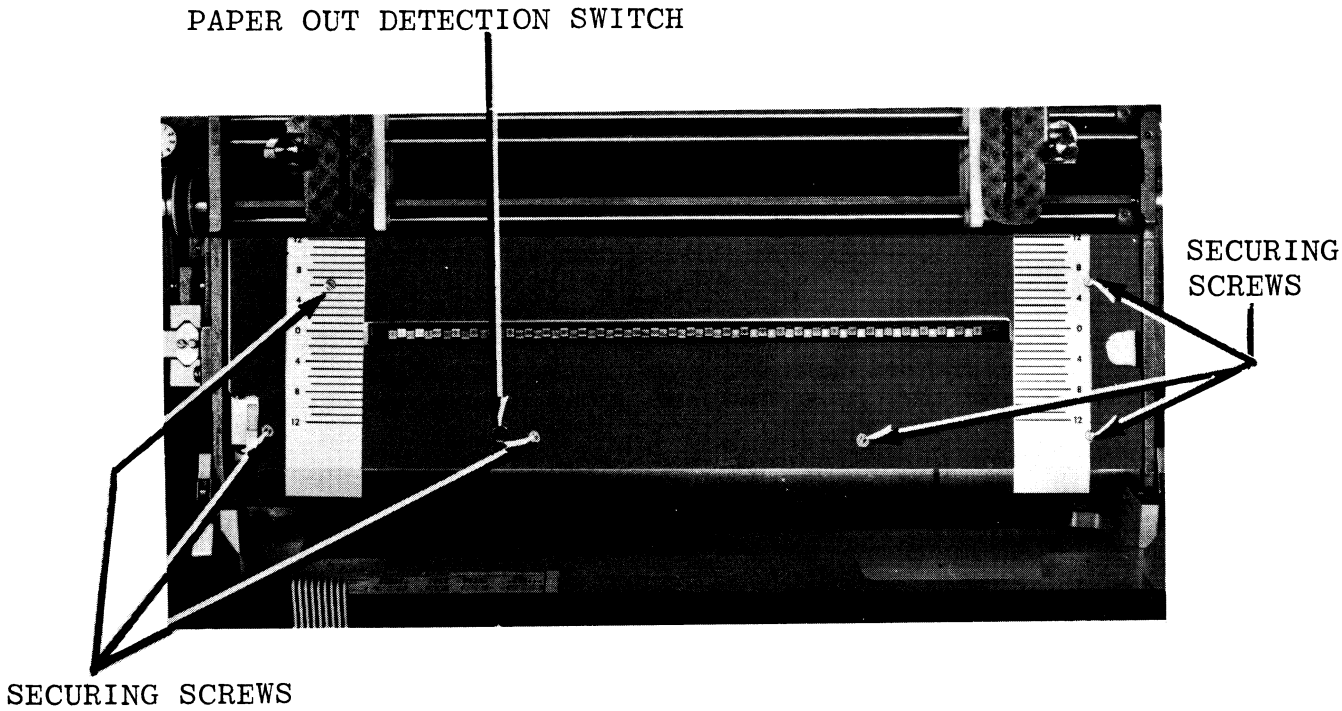


COVER REMOVAL

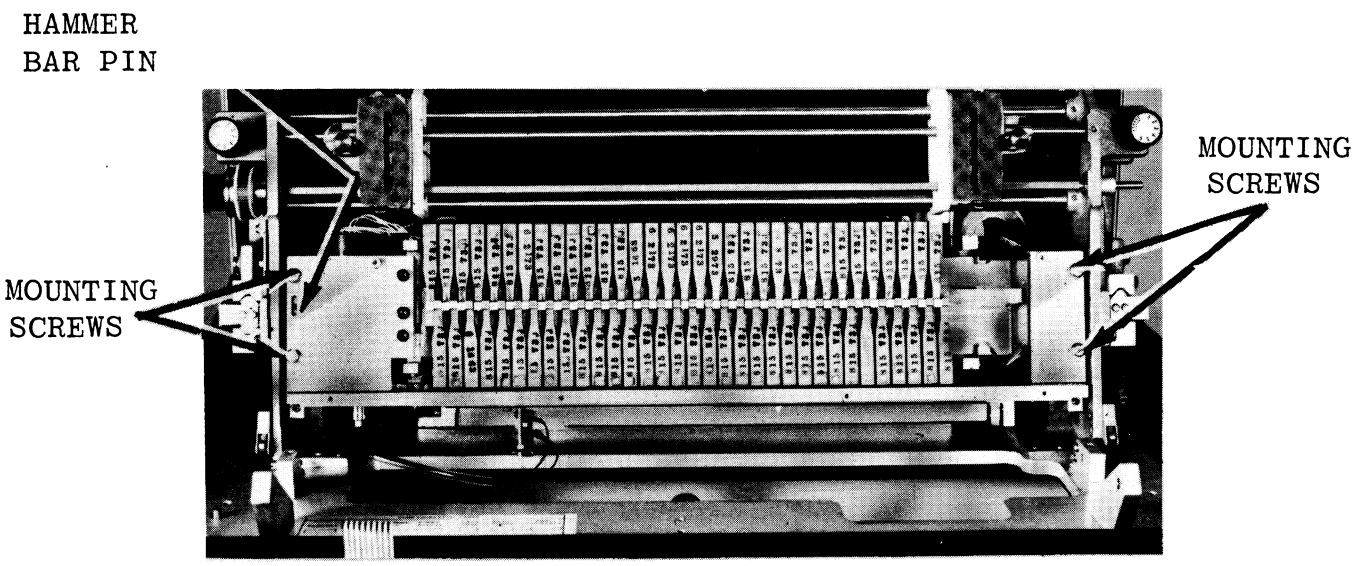


HAMMER BAR REPLACEMENT

FIGURE 4-25

b. Remove the hammer bar cover by removing eight flat head screws.

c. Disconnect the paper advance motor and the hammer bar drive motor from J1 and J2 of the Paper Advance and Hammer Drive PCA.

d. Remove the PCA.

e. Disconnect the Feedback PCA ribbon cable.

f. Remove the four #10 pan head screws at the ends of the hammer bar.

g. The hammer bar is pinned at the left end and is positioned by a key at the right end. Lift the hammer bar from the support arms. NOTE: Removal can be facilitated by first tapping the left end of the bar.

h. Position the hammer bar on the printer base and disconnect all hammer leads. Remove the hammer bar.

i. Replacement of the hammer bar is accomplished by reversing the above procedure. Prior to tightening the two mounting screws on the right hand side, lightly tap the right support arm which will minimize left to right side play. After tightening the mounting screws, rotate the support arms together and check for free movement in the supporting slides.

4.3.5.2 HAMMER REPLACEMENT (FIGURE 4-26)

a. Perform steps described in 4.3.5.1 a. and b.

b. Release the hammer in question by unscrewing the two attachment screws. Use a 3/32 inch Allen Hex Key wrench.

NOTE: These screws may only be visible when all the PCA's in the card cage have been removed.

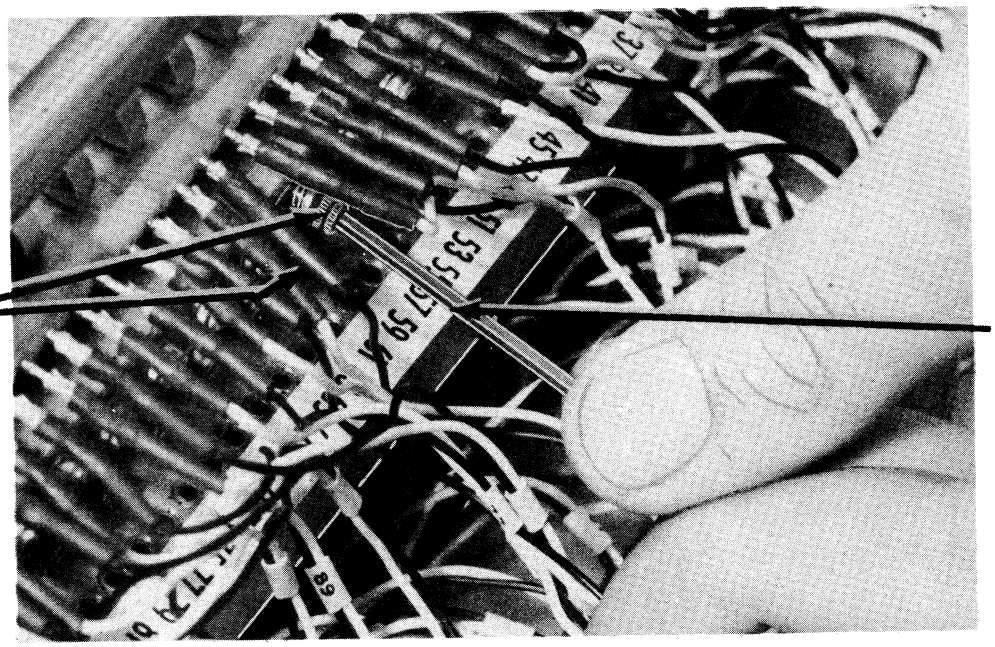


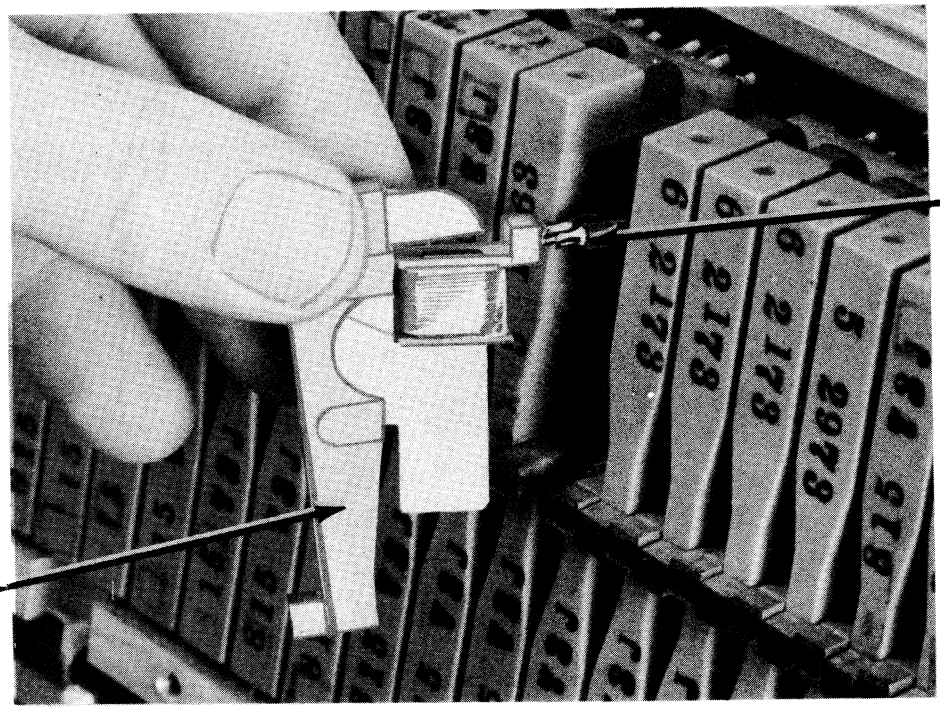


HAMMER REPLACEMENT

FIGURE 4-26

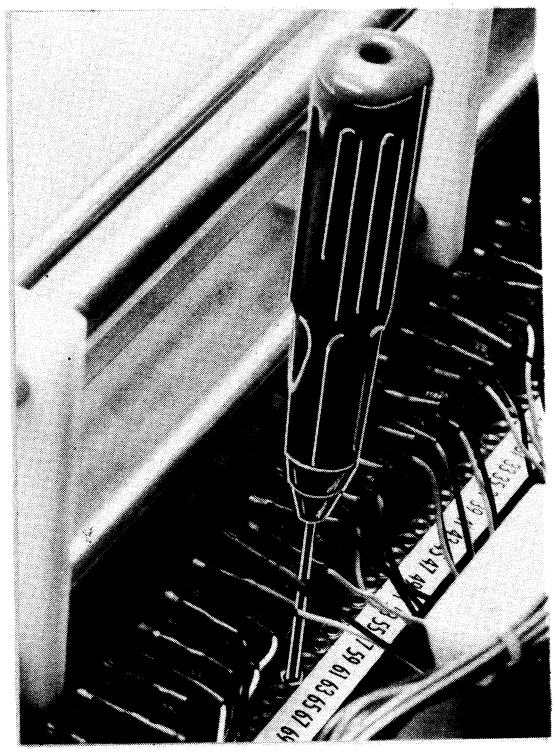

ADJUSTMENT OF HAMMER FLIGHT TIME

FIGURE 4-27

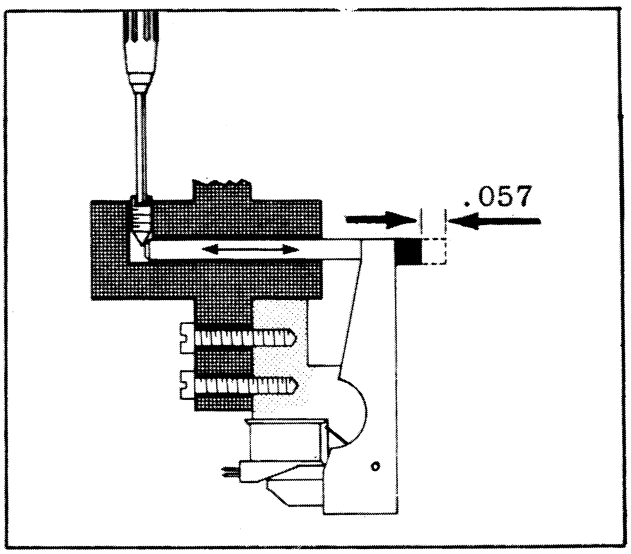


FLIGHT TIME ADJUSTMENT MECHANISM

FIGURE 4-28

c. Separate the hammer from the hammer bar and unplug both leads from the coil.

d. When reattaching a hammer, reverse the above procedure and insure that the hammer mounting surface is clean.

4.3.5.3 HAMMER FLIGHT TIME ADJUSTMENT (FIGURES 4-27 and 4-28)

This adjustment is necessary when incorrect character spacing is observed. The hammer throw should be approximately .057 inches (.065 inches for hammer bars not utilizing a mylar strip). If it is necessary to move a hammer much beyond this dimension, then other adjustments should be checked; magnetic transducer phasing, hammer positioning, squareness of the hammer face, tightness of pivot or the character clip for proper character positioning. The flight time adjustment is made as follows:

a. Remove paper from the machine and set the density control for single part printing.

b. Run the machine and print the character "M" directly on the hammer faces.

c. Remove the top paper guide by releasing both of the one-quarter turn fasteners.

d. Remove the hammer bar cover by removing eight flat head screws.

e. Locate the hammer adjusting screws which are recessed in the hammer bar casting. All hammer pairs are marked with odd numbers which correspond to the odd column serviced by that hammer. (i.e. columns 1 and 2 are printed by hammer number 1)

f. Adjust the hammer in question by inserting a 5/64 inch Allen Hex wrench in the appropriate slot. (See Fig. 4-27)

Rotate the tool clockwise to move the characters to the left or counter clockwise to move the characters to the right. Approximately one-half turn will move the characters from clipping on the left to clipping on the right. Adjust so that both characters printed on the hammer are centered on the hammer face.

g. If clipping cannot be removed by adjusting the flight time, check the position of the hammer. A hammer can be moved horizontally by loosening its two mounting screws. Adjacent hammer heads must be separated by a minimun of .002 inches to ensure proper clearance. If these conditions cannot be attained, replace the hammer in question.

4.3.5.4 FLIGHT TIME ADJUSTMENT MECHANISM REPLACEMENT

The hammer rest position is adjustable by a mechanism which consists of a cone point Nylok socket set screw and a cone point pin which is free to slide. (See Figure 4-28) A small amount of silicon grease has been applied to the surfaces where the two cones meet. This prevents contaminants from affecting the free movement of the mechanism. When the screw is rotated clockwise, the pin is forced outward, which reduces hammer travel. The hammer return spring maintains contact between the two cones when the adjusting screw is moved counter clockwise to increase the hammer travel. If the mechanism does not adjust smoothly or does not lock in the desired position, replacement of either the pin or screw is indicated.

4.3.5.4.1 FLIGHT TIME ADJUSTING PIN REPLACEMENT (FIGURE 4-29)

a. Remove the hammer in front of the adjusting pin as described in Section 4.3.5.2.

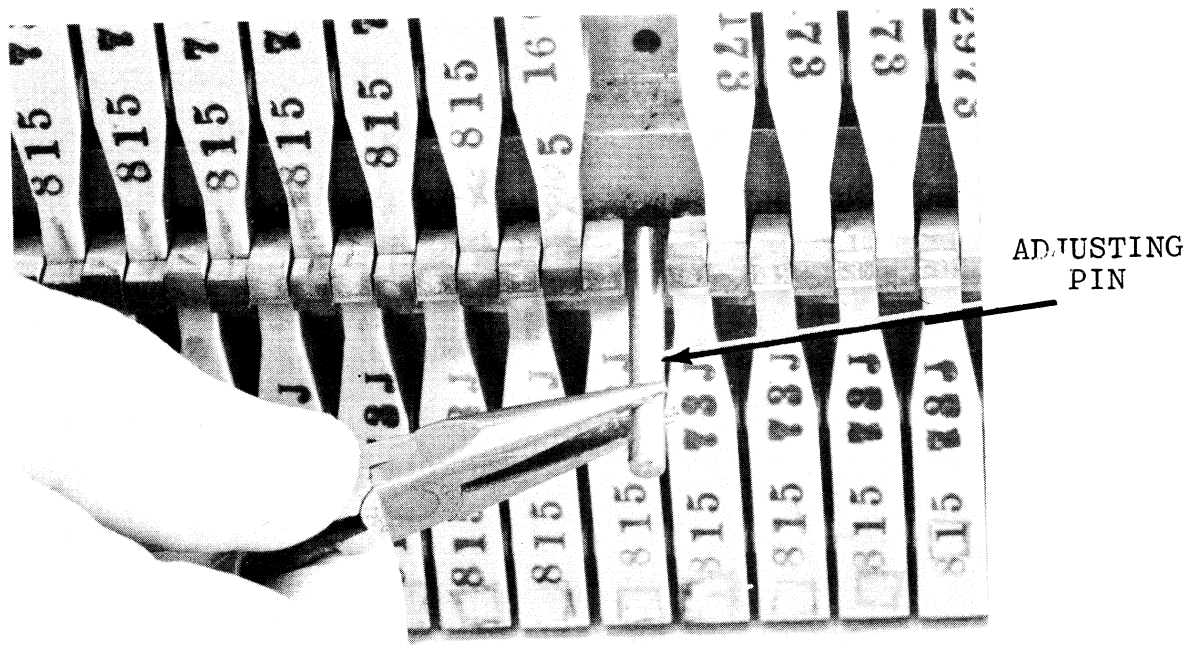


FLIGHT TIME ADJUSTING PIN REPLACEMENT

FIGURE 4-29

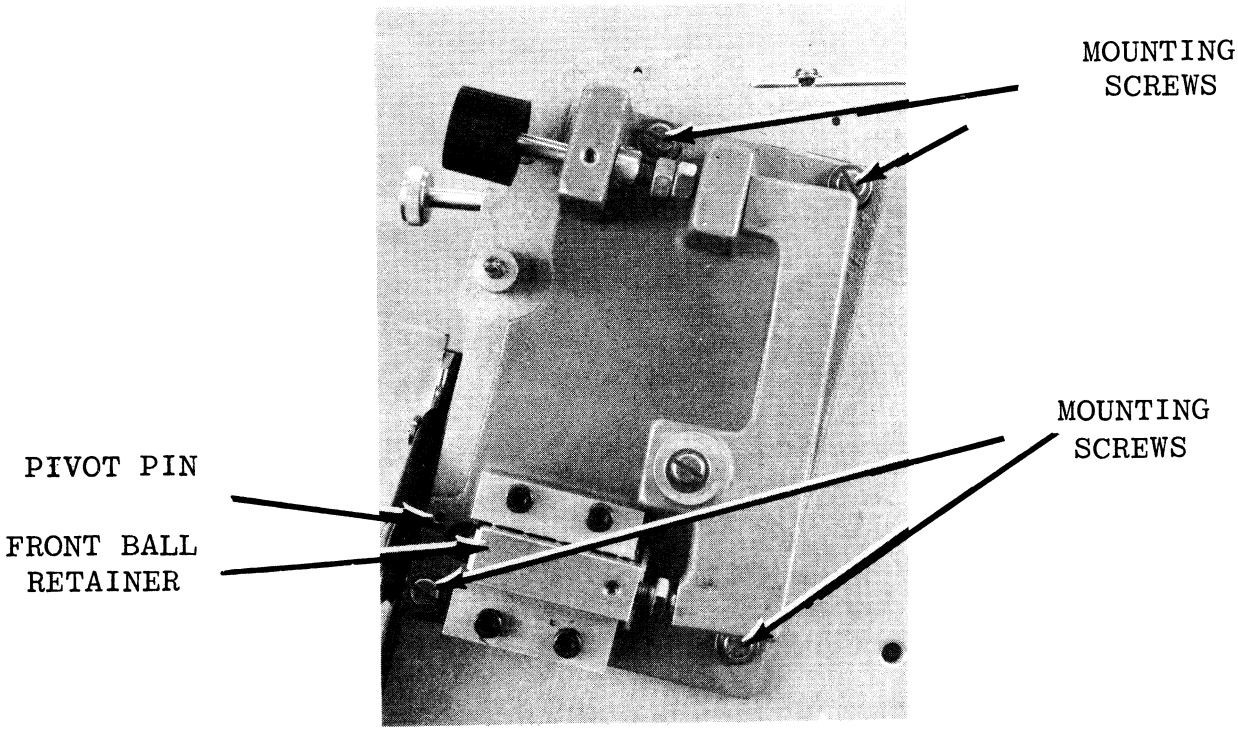


HAMMER BAR PIVOT PLATE

FIGURE 4-30

b. Pull out the adjusting pin. If the cone point is not smooth or exhibits a damaged surface, it should be replaced.

c. Apply a small amount of silicon grease (Dow Corning stop cock grease or equivalent) to the cone point and replace the pin in the hole. It should slide freely.

d. Replace the hammer and adjust flight time as per Section 4.3.5.3.

4.3.5.4.2 FLIGHT TIME ADJUSTMENT SCREW REPLACEMENT (FIG. 4-28)

a. Remove the adjusting screw with a 5/64 inch Allen Hex Key wrench. Inspect the cone point for signs of damage or a rough condition of the cone point. Replace as required.

b. Apply a small amount of grease (Dow Corning stop cock grease or equivalent) to the cone point and thread the screw into the hole.

c. The Nylok set screw should create enough friction to retain the adjustment setting.

d. Adjust flight time as described in Section 4.3.5.3.

4.3.5.5 HAMMER BAR PIVOT PLATE REPLACEMENT (FIGURE 4-30)

Both pivot plates rotate about a pin which is located at the print line to align the hammer bar with the character belt. If an adjustment is required, see Section 4.3.5.6. To replace, proceed as follows:

a. Remove the hammer bar as described in Section 4.3.5.1.

b. For the left side plate, remove the drive pulley assembly as described in Section 4.3.4.4.2.

c. Unfasten, from the spring pin, the spring which connects to the hammer bar support arm.

d. Remove the front ball retainer.

e. Remove the four screws securing the pivot plate.

f. Loosen the lower ball guide.

g. Rotate the plate forward and remove the balls.

h. Remove the pivot plate.

i. To replace, slip the pivot plate over the pivot pin and reverse the above procedure.

4.3.5.6 HAMMER BAR TILT ADJUSTMENT (FIGURE 4-30)

This adjustment is necessary when light printing can be observed on the bottom of characters in the lower hammer positions or the tops of characters in the upper hammer positions. Verify that the yoke height is properly adjusted (Section 4.3.3.1) prior to proceeding with this adjustment.

a. Set the density adjust knob for the <u>six-part</u> form position. Load <u>single</u> part in the printer.

b. Slightly loosen the four mounting screws for each pivot plate.

c. Print several lines of the character, "E". The characters printed by the bottom hammers will be darker on the bottom and the characters printed by the top hammers will be darker on top. Select an area of printing where the general print density for several hammers is about the same and check for this darkness at the tops and bottoms of characters.

d. If the top of the top hammer characters are darker than the bottoms of the bottom hammer characters, tilt the pivot plates toward the rear of the printer until equal darkness for tops and bottoms is obtained. <u>OR</u>

e. If the bottoms of the bottom hammer characters are darker than the tops of the top hammer characters, tilt the pivot plates toward the front of the printer until equal darkness for tops and bottoms is obtained.

f. Tighten the four mounting screws on each pivot plate.

g. Ensure front to back freedom of the hammer bar in the pivot plate by working the pivot arms several times.

4.3.5.7 HAMMER BAR DENSITY ADJUSTMENTS

The density adjust knobs move the entire hammer bar assembly either closer or farther away from the type faces. For single part form, the number "1" on the knobs should be set at 12 o'clock and 6 o'clock for 6 part forms. A clockwise rotation of these knobs increases density. A density increase beyond the required setting will result in possible smearing and "ghosting".

4.3.5.7.1 DENSITY STOPS ADJUSTMENT (FIGURE 4-31)

The following procedure works best with a fresh ribbon.

a. Loosen the density adjust lock nuts and set the density adjust knob "1" position at 1 o'clock. (Ensure that the knob set screws are tightly secured on the flats of the shaft). The rear of the pivot arm should be approximately parallel to the rear edge of the pivot plate to ensure that the density adjust knobs have sufficient mechanical advantage. Several rotations of the density adjust knobs may be required to attain this setting.

b. Loosen the hammer bar stop set screw.

c. Load single part paper into the printer.

d. Print full lines of the character "M" and adjust the hammer

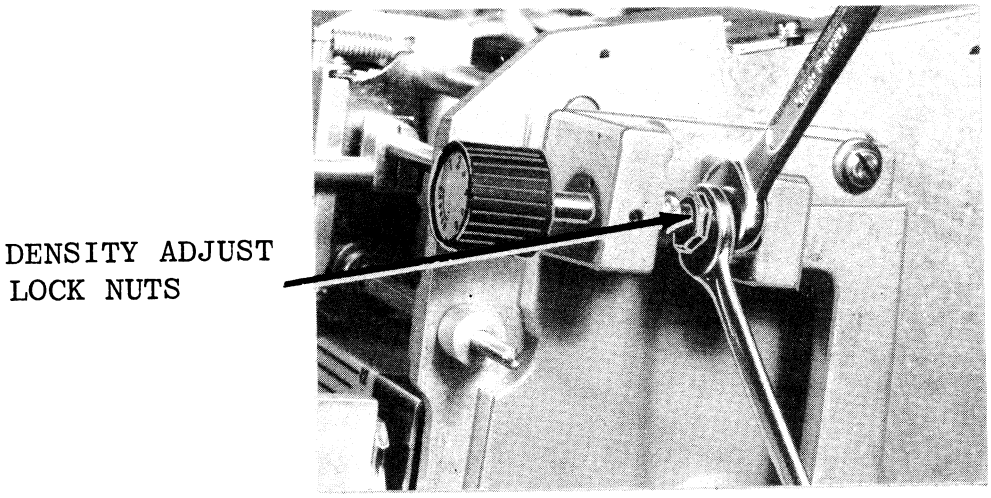


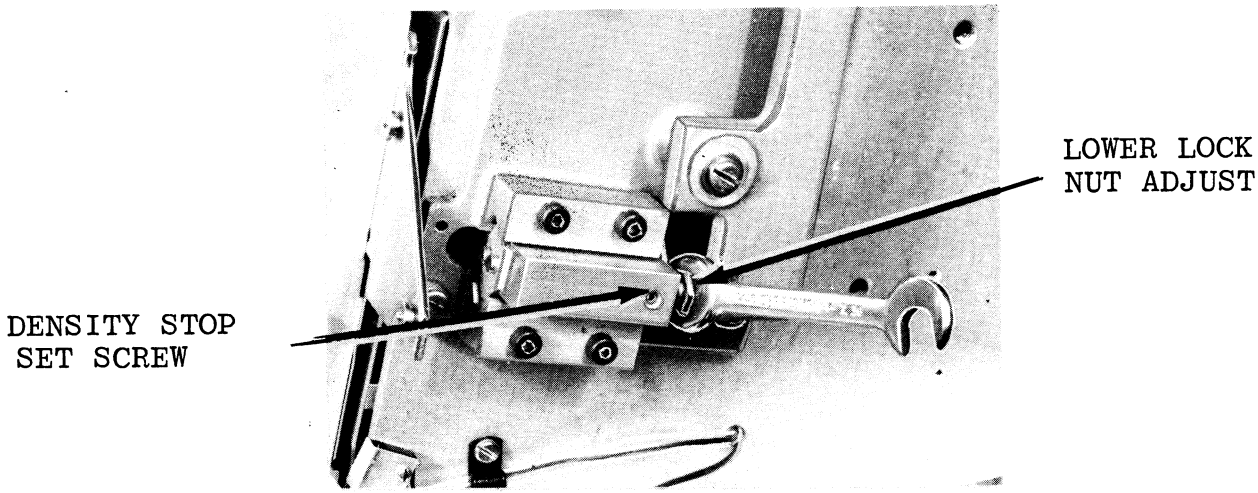


DENSITY STOP ADJUSTMENT

FIGURE 4-31

bar stop until a character just begins to "ghost". Back off the density stop 1/8 turn and tighten the hammer bar stop set screw.

e. Rotate the density adjust knobs clockwise until the "1" positions are at 3 o'clock.

f. Lock the density adjust lock nuts against the pivot plate.

g. Loosen the density stop collar and rotate the density adjust knobs one complete turn counter clockwise until the "1" positions are again at the 3 o'clock position.

h. Secure the stop collar against the pivot plate.

4.3.5.7.2 DENSITY KNOB FRICTION ADJUSTMENT (FIGURE 4-32)

Should density knobs require excessive force to rotate, or not maintain a setting during operation, adjust as follows:

a. Rotate the nylon tipped set screw until the desired friction is achieved.

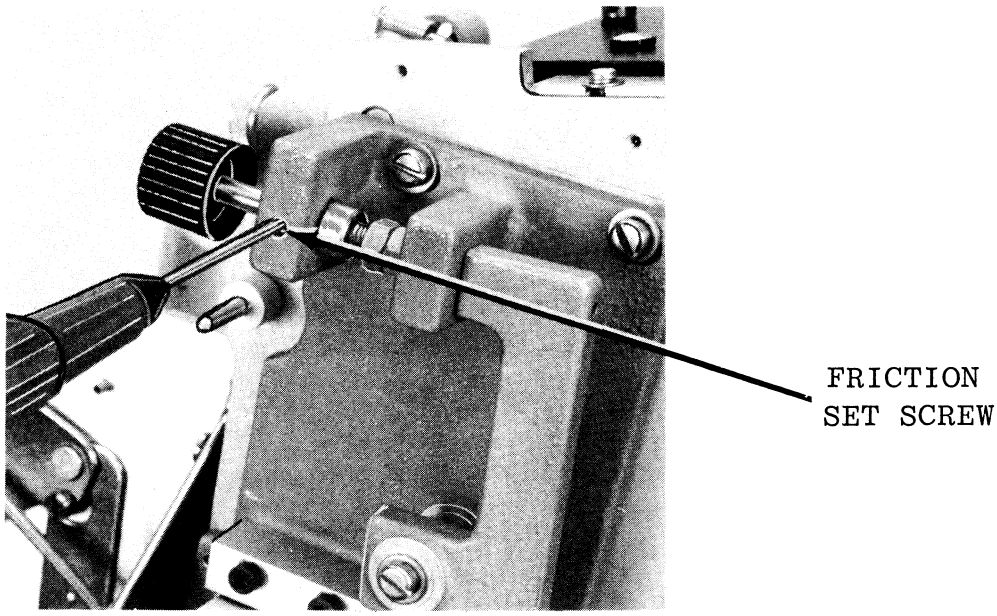


DENSITY KNOB FRICTION ADJUSTMENT
FIGURE 4-32

4.3.5.8 HAMMER MYLAR STRIP REPLACEMENT (FIGURE 4-33)

a. Remove hammer bar as described in Section 4.3.5.1.

b. Position the hammer bar directly in front of the mother board with the hammer heads facing downward and with wire leads still attached.

c. Disconnect one side of the top mylar strip and, using a piece of cellophane tape, attach a new strip to the end of the old strip.

d. Exercising care, pull the opposite end of the old strip until the replacement strip is completely through the hammer assembly.

e. Attach the free end of the new strip to the spring clip in the connector plate.

f. Remove the cellophane from the strip and attach the other end to its spring clip.

g. Check for proper tension and ensure that the strip is correctly aligned on the hammer bar. Tension can be adjusted by bending the spring clip at the appropriate end to take up any slack in the strip.

h. Replace the bottom strip in the same manner described for the top.

i. Replace hammer bar (Reference Section 4.3.5.1).

4.3.5.9 HAMMER BAR DRIVE MECHANISM

(See Addendum S-1 at rear of Manual)

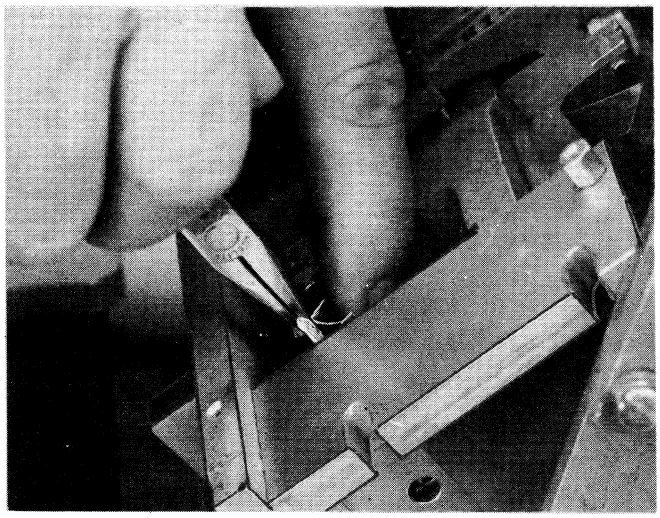

DISCONNECT ONE SIDE
OF THE MYLAR STRIP

BUTT AND ATTACH
THE NEW STRIP
TO THE OLD

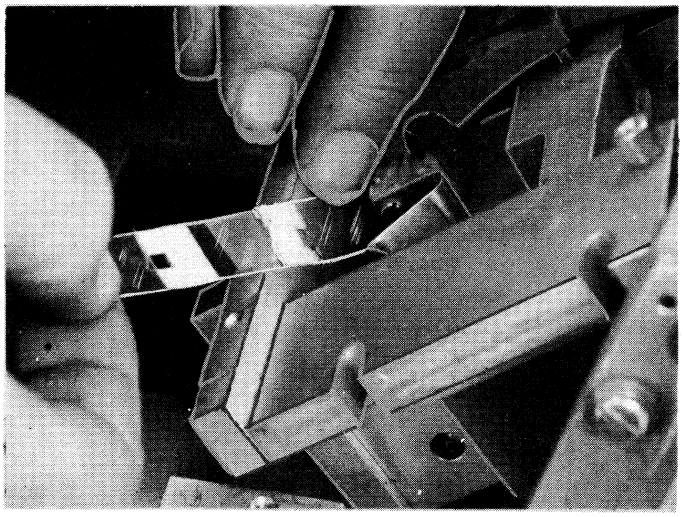

PULL THE NEW MYLAR STRIP
THRU BAR AND INTO PLACE

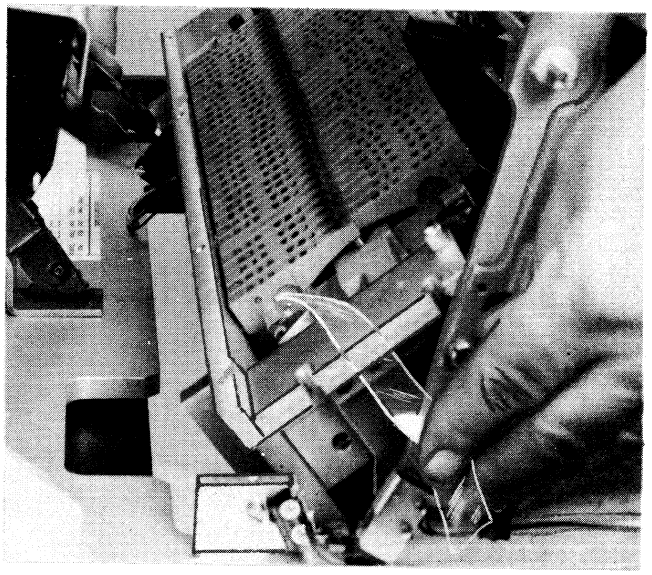

BOTTOM MYLAR STRIP REPLACEMENT
FIGURE 4-33

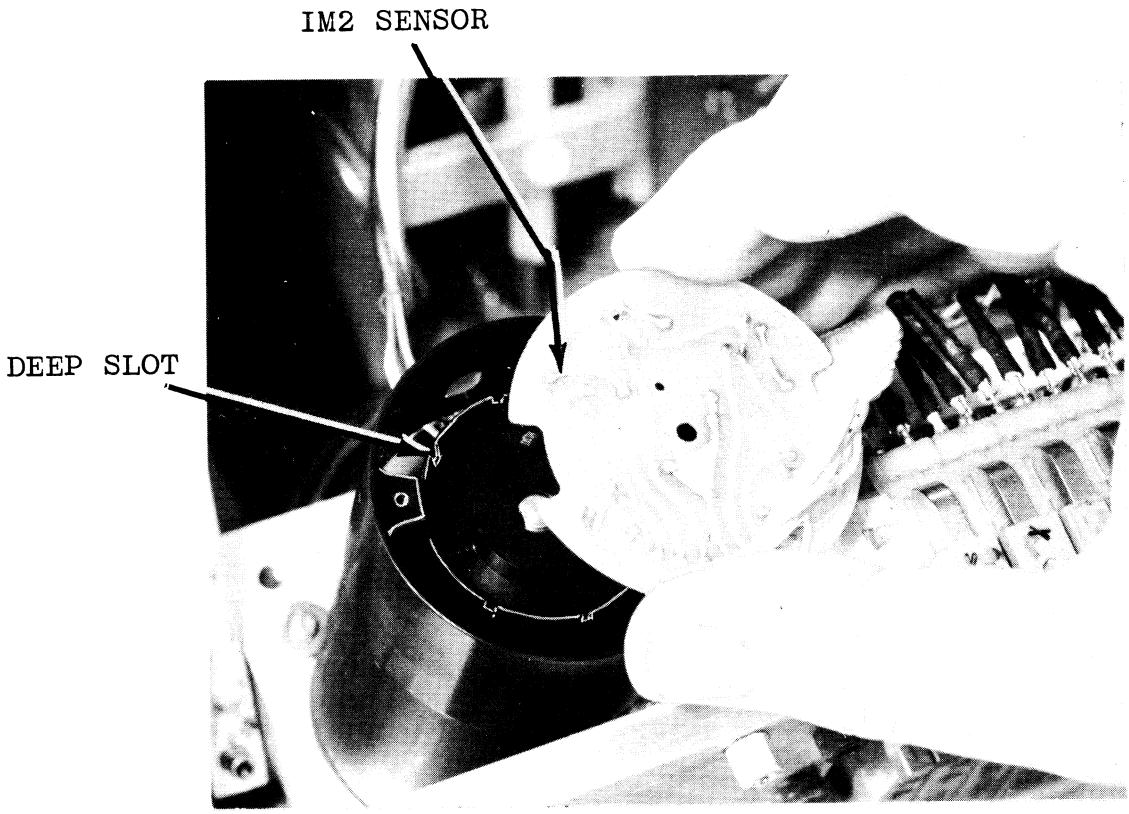


INSTALLATION OF THE FEEDBACK PCA
FIGURE 4-41

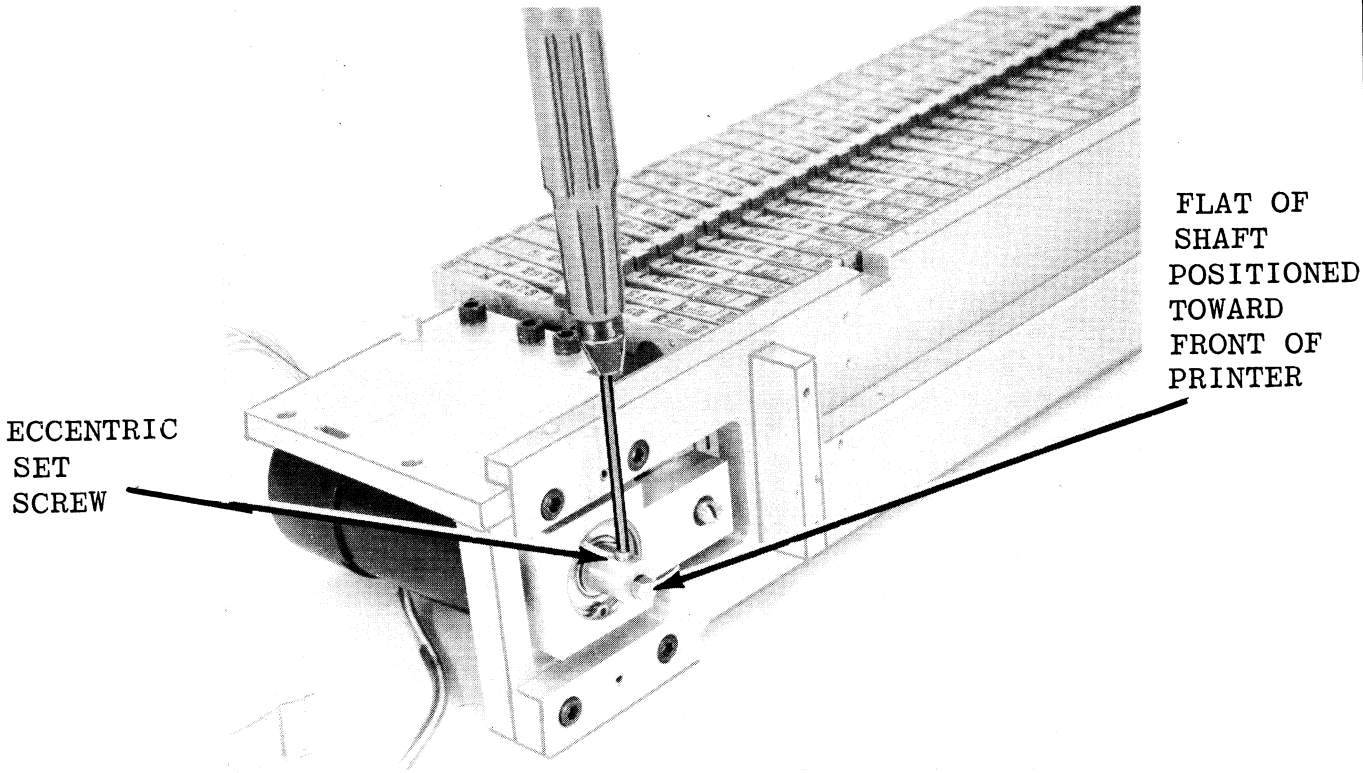


FIGURE 4-42

CAUTION The mechanical alignment of the oscillating hammer bar is dependent on proper adjustment of the eccentric pin. This mechanism regulates the side to side throw of the hammer bar from the neutral position. The eccentric pin is factory pre-adjusted to balance the throw for a given eccentric and tie bar assembly. No attempt should be made to readjust the eccentric pin.

### 4.3.6 ADDITIONAL ADJUSTMENTS

#### 4.3.6.1 BELT AND GEAR PULSE TIMING ADJUSTMENTS

a. Remove the yoke cover plate elements.

b. Check the individual transducer gap spacings. (The gap between the face of the gear transducer pickup and an adjacent gear tooth (face) should be 0.005-inch, ±.001 inch; the gap between the belt transducer pickup and the vertical metallic target band (on rubber portion of character belt) should be approximately .015 inch.

CAUTION

If a particular transducer (pickup unit) requires considerable movement to satisfy the gapping requirement, the entire block should be detached and spun, the requisite number of turns, around the threaded transducer sleeve. Rotating the transducer within the mounted block is strictly for limited fine-tuning adjustment (gross adjustments will excessively twist (distort) the attached leads). (See Figure 4-43)
NOTE: Having determined that both the physical and electrical integrity of the transducers are intact, the relative timing between both units can be adjusted. Proceed as follows:

c. Monitor TP1 (gear pulse) and TP2 (belt pulse) test points on the Control Print and Paper Advance PCA. (Use a dual-trace oscilloscope, sync on TP2, and select a sweep speed of 0.2 msec.)

d. If the timing is correct, a gear pulse signal (TP1) should be observed to occur at approximately midpoint during the time envelope of the belt pulse signal (TP2). (See Figure 4-44.)

e. If the relative timing evidenced is not as shown, adjust potentiometer R32 located at the top of the Control Print and Paper Advance PCA fully counterclockwise, and observe the oscilloscope display while slowly rotating the potentiometer shaft clockwise. At some point within the adjustment range of R32, the proper display should be observed.

4.3.6.2 MAGNETIC TRANSDUCER PHASING ADJUSTMENT

If the majority of all hammers are printing early or late, the magnetic transducer phasing should be adjusted rather than adjusting the flight time of each individual hammer. Prior to this adjustment, the left yoke pivot and the hammer bar should be checked for any looseness that would allow a left-right movement.

a. Remove the lamp cover, flywheel cover, and belt cover to expose the magnetic transducer assembly.

b. Both transducers are mounted on the same plate and rotate around the pulley assembly together. Mark the location of the plate and loosen the two clamps which lock the transducer plate to the yoke. (Figure 4-43.)

c. Run the printer on six-part paper using the test pattern. Observe the clipping produced on the sixth copy as the transducer plate is rotated a small amount in either direction.

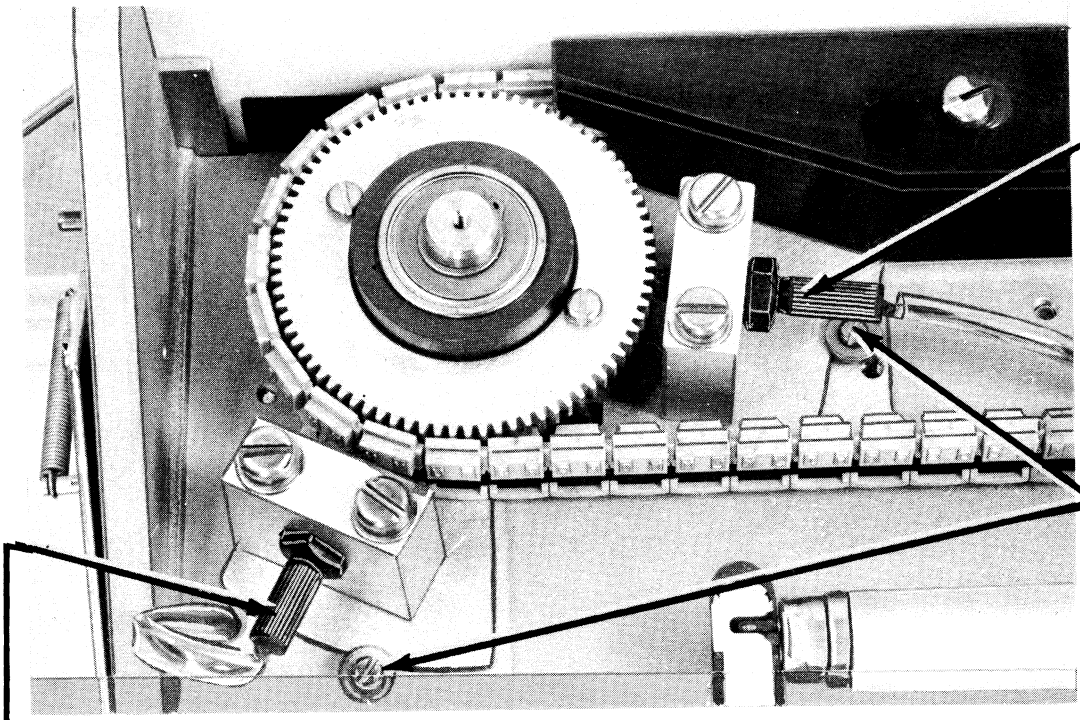


MAGNETIC TRANSDUCE PHASING ADJUSTMENT

FIGURE 4-43

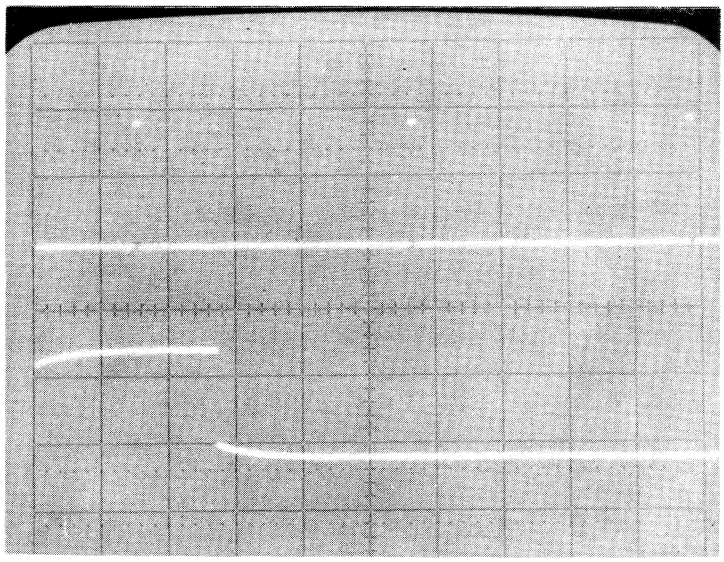


BELT AND GEAR PULSE TIMING

FIGURE 4-44

NOTE: The results just produced on all hammers are similar to the effects produced by individual hammer flight time adjustments.

d. When the optimum printing position is attained, secure the two locking clamps and print several lines to verify the adjustments.

### 4.3.6.3 STEPPING MOTOR/DELAYED LINE MARKER/VFU ALIGNMENT

In order for the Form Feed (FF) and Vertical Tabulation (VT) paper advance functions to be performed properly, it is essential that the alignment interrelationships between the stepping motor, the delayed line marker, and the VFU elements be correctly adjusted. (If there is some misalignment, the printer may display a variety of symptoms. It could show a regular pattern of incorrectly spaced lines - neither 6 LPI nor 8 LPI. The paper transport mechanism might go into a "run away" condition wherein paper is continuously advanced. Alternately, the printer may respond to an initial FF or VT command and then "hang-up" and refuse to respond to subsequent paper advance commands.)

The first step in this alignment sequence requires that the user perform a physical check of the operating subassemblies. This should include verifying that each major element is securely mounted and hasn't worked loose; that the associated belts and pulleys are intact; that the necessary electrical interconnections are intact and tight; and that the line marker disc is approximately centered within the aperture of the line marker assembly. Once the subject elements have been examined physically, the user should perform the following electrical alignment procedure:

<u>Align VFU and Delayed Line Marker Pulses</u>

1. Loosen the two screws securing the Line Marker unit to the printer sidewall; push the Line Marker unit towards the rear of the printer as far as the device can travel---hold the Marker in this position, and securely tighten the two mounting screws.

2. Remove the Control Print and Paper Advance PCA from the printer; insert a suitable Card Extender (extender board) into the vacant Control Print and Paper Advance PCA slot on the Mother Board Assembly. Install the Control Print and Paper Advance PCA into the Card Extender device.

3. For printers equipped with a 2-Channel VFU, connect the Channel No. 1 input of a dual-trace oscilloscope to the Top-of-Form ($\overline{TOF}$) VFU output signal (at pin labeled TOF, located on left-rear edge of the Mother Board Assembly); printers equipped with a 12-Channel VFU require that the oscilloscope be connected to the VFU Channel 1 output signal directly at barrier strip TB2 (attached to rear of mainframe left side plate, directly behind VFU)---Channel 1 signal is accessible at the third terminal up, from the bottom of the barrier strip.

4. Connect oscilloscope (Channel No. 2 input to the $\overline{\text{Delayed}}$ Line Marker signal ($\overline{DEL\ LM}$), at P7, pin 31 on the Control Print and Paper Advance PCA.

5. At the Control Print and Paper Advance PCA, initiate a Paper Slew function by connecting a jumper wire from P7, pin 3, to test point ground (TP GND).

6. Synchronize Channel No. 1 scope display on the falling edge of the $\overline{TOF}$ signal (see sketch I)

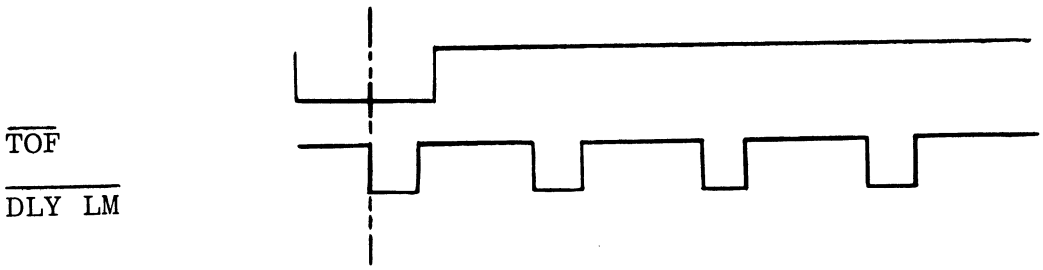


SKETCH I.

7. The falling edge of the $\overline{DLY\ LM}$ signal should occur at the center of the $\overline{TOF}$ pulse --- there are two adjustments necessary to ensure that this condition is met; if the $\overline{DLY\ LM}$ signal falls, anywhere within the right-half of the $\overline{TOF}$ pulse waveform, proceed directly to step b., below.

   a. If the $\overline{DLY\ LM}$ signal does not appear anywhere within the right-half of the $\overline{TOF}$ pulse waveform, the VFU drive belt must be "slipped" on the VFU, drive pulley, one tooth at a time, until the $\overline{DLY\ LM}$ signal falls somewhere within the right-half of the $\overline{TOF}$ pulse waveform.

b. Once the $\overline{\text{DLY LM}}$ signal is displayed anywhere within the right-half of the $\overline{\text{TOF}}$ pulse waveform, loosen the three (3) drive motor securing clamp screws, and rotate the drive (stepping) motor housing slightly, until the falling edge of the $\overline{\text{DLY LM}}$ signal coincides directly with the center of the $\overline{\text{TOF}}$ pulse, as shown in Sketch I. Carefully tighten the drive motor securing-clamp screws (3), checking to ensure that the scope display has not changed.

Align Stepping Motor Pulses And Delayed Line Marker Output

8. Connect oscilloscope (Channel No. 1 input) to the Line Marker output signal as follows:

   1. If alignment is being performed on a 6 Lines-Per-Inch only printer, or if optional 6/8 LPI switch (on Control Print And Paper Advance PCA) is positioned at 6 LPI, connect oscilloscope Channel No. 1 to $\overline{\text{LM6}}$ pin (at left rear edge of Mother Board assembly).

   2. If alignment is being performed on an 8 Lines-Per-Inch only printer, or if optional 6/8 LPI switch is positioned at 8 LPI, connect oscilloscope Channel No. 1 to $\overline{\text{LM8}}$ pin (at left rear edge of Mother Board Assembly).

9. Connect oscilloscope (Channel No. 2 input) at TP6 (Stepping Motor pulses) on Control Print And Paper Advance PCA.

10. At the Control Print And Paper Advance PCA, initate a Paper Slew function by connecting a wire jumper between P7, pin 3, and TP GND (test jack).

11. Synchronize oscilloscope Channel No. 1 display on the falling edge of the ($\overline{\text{LM6}}$) or ($\overline{\text{LM8}}$) pulse, as shown in Sketch J.

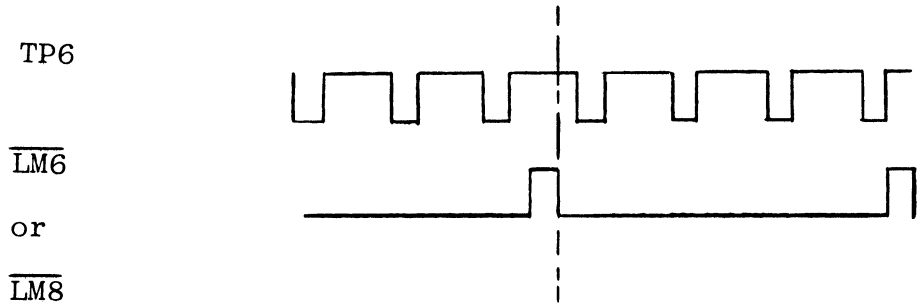


SKETCH J (6 Lines-per-Inch configuration shown)

12. Loosen the two (2) Line Marker mounting screws, and adjust the physical position of the Line Marker so that the falling edge of the $\overline{LM6}$ (or $\overline{LM8}$) signal is centered between the rising edges of the stepping (drive) motor pulses. Secure the Line Marker unit in position by tightening the two mounting screws; be certain not to shift the position of the Line Marker, thereby changing the alignment.

13. Recheck the VFU and Delayed Line Marker Pulse alignment (oscilloscope display as shown in Sketch I) to ensure no adverse interaction between these two alignment procedures --- if $\overline{TOF}$ and $\overline{DLY\ LM}$ signals are now misaligned, repeat the procedure detailed in steps 1 through 7, above.

Final Check --- VFU/Stepping Motor/Delayed Line Marker Alignment

14. Connect oscilloscope (Channel No. 1, input) to Control Print And Paper Advance PCA, at TP6 (Stepping Motor Pulses).

15. Connect oscilloscope (Channel No. 2 input) to Control Print and Paper Advance PCA, at P7, Pin 31 ($\overline{DLY\ LM}$)

16. Initialize the tractors to the Top-Of-Form (home) position, by pressing and releasing the FORM FEED pushbutton.

17. Enter the Internal Test mode of operation (position TEST switch to ON); synchronize oscilloscope (Channel No. 1 display) on the rising edge of the stepping motor pulse, as shown in Sketch K, (for 6 LPI) or Sketch L (for 8 LPI), below. The $\overline{DLY\ LM}$ pulse should occur immediately after the last stepping motor pulse (after each group of four (4) stepping motor pulses, in 6 LPI mode, or each group of three (3) stepping motor pulses, in 8 LPI mode.)

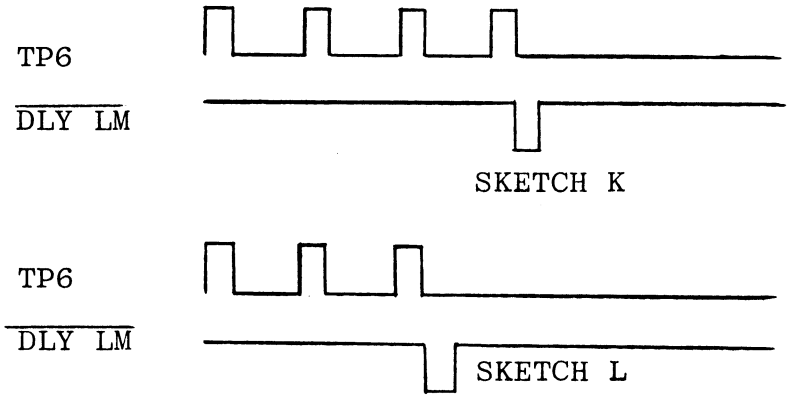

#### 4.3.6.4 MOTOR IN SPEED ADJUSTMENT

This adjustment is required to prevent printing until the motor reaches synchronous speed. An incorrect adjustment would result in severe clipping of characters during the first several lines of print following a motor start sequence and could cause damage to the character clips.

a. Identify potentiometer R24 on the Auxiliary PCA. Reference Figure 4-46.

b. Rotate potentiometer R24 fully counter clockwise.

c. Run an internal test pattern.

d. Slowly rotate potentiometer R24 clockwise until printing stops.

e. Rotate R24 slowly counterclockwise, until printing commences again; now, position R24 one-half turn further (ccw), <u>beyond</u> this point. This is the correct final adjustment point required to ensure printer stability.

## 4.4 CORRECTIVE MAINTENANCE AIDS

The corrective maintenance aids listed in this section are intended as an assistance to rapid diagnosis of a malfunctioning unit. Following is an index of subjects covered. (NOTE: It is not intended that this section give a comprehensive listing of all possible fault conditions, but merely to note certain of the more common malfunctions.)

(THIS PAGE INTENTIONALLY LEFT BLANK)

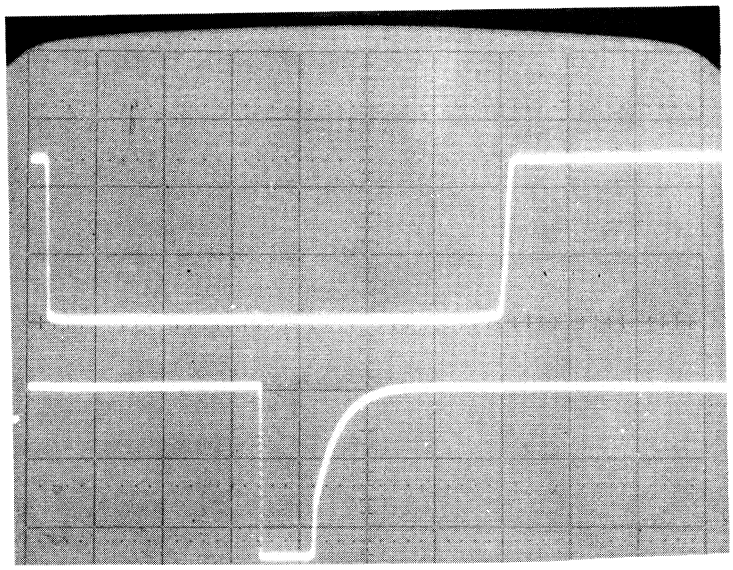


LINE MARKER AND VFU PHASING

FIGURE 4-45

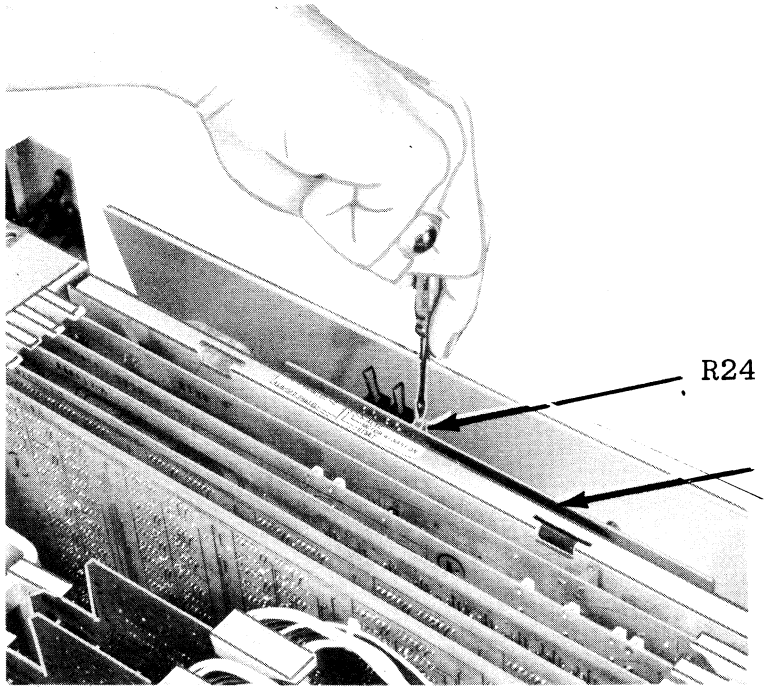


MOTOR-IN-SPEED ADJUSTMENT

FIGURE 4-46

| Section | Condition |
| --- | --- |
| 4.4.1 | Character belt does not turn |
| 4.4.2 | Intermittent line spacing |
| 4.4.3 | Ribbon foldover |
| 4.4.4 | Ribbon pickup causing smearing |
| 4.4.5 | Ribbon not reversing |
| 4.4.6 | Character clipping, individual |
| 4.4.7 | Character clipping, alternate |
| 4.4.8 | Individual character ghosting |
| 4.4.9 | General character ghosting |
| 4.4.10 | Individual character grouping |
| 4.4.11 | General character grouping |
| 4.4.12 | Adjacent columns not printing |
| 4.4.13 | Printing garbled data |
| 4.4.14 | Printing wrong character in test mode |
| 4.4.15 | Hammer bar does not initialize |
| 4.4.16 | Hammer bar does not shuttle |
| 4.4.17 | Erratic hammer bar motion |

### 4.4.1 CHARACTER BELT DOES NOT TURN

PROBABLE CAUSES

a. Residue of paper chad or ribbon dust buildup on belt side of character clips.

b. Yoke latch improperly closed. Verify that the yoke latch is firmly seated so that the yoke safety switch is engaged. Reference Section 4.3.3.2

### 4.4.2 INTERMITTENT LINE SPACING

PROBABLE CAUSES

a. Surface of hammer cover plate and yoke cover plate may have burrs or sticky patches that could impede paper movement.

b. Verify that the edge of the ribbon mylar protector lies flat against the yoke cover plate.

c. Paper clamps extend beyond allowable position causing interference. Refer to Section 4.3.4.1 for adjustments.

d. Incorrect adjustments to the paper tractor phasing and chain tension. Refer to Section 4.3.4.3.1.

e. Malfunctioning paper driver PCA. Replace.

### 4.4.3 RIBBON FOLDOVER

PROBABLE CAUSE

a. Incorrect ribbon guide adjustment. Refer to Section 4.3.2.2.

### 4.4.4 RIBBON PICKUP CAUSING SMEARING

PROBABLE CAUSES

a. Ribbon tension. Refer to Section 4.3.2.4.

b. Faulty mylar ribbon protector. Replace as necessary.

### 4.4.5 RIBBON NOT REVERSING

PROBABLE CAUSE

a. Incorrect alignment or operation of ribbon reversing switches. Refer to Section 4.3.2.1.

### 4.4.6 INDIVIDUAL CHARACTER CLIPPING

PROBABLE CAUSE

a. Erroneous hammer flight time setting. Refer to Section 4.3.5.3.

### 4.4.7 ALTERNATE CHARACTER CLIPPING

PROBABLE CAUSES

a. Maladjusted magnetic transducer phasing. Refer to Section 4.3.6.2.

b. Lateral movement of hammer bar assembly with respect to the machine base. If this condition is suspect, refer to Section 4.3.5.8.

c. Lateral movement of the yoke assembly with respect to the printer base. If this condition exists, refer to Section 4.3.3.4.

### 4.4.8 INDIVIDUAL CHARACTER GHOSTING

PROBABLE CAUSE

a. Incorrect hammer flight time adjustment. Refer to Section 4.3.5.3.

### 4.4.9 GENERAL CHARACTER GHOSTING

PROBABLE CAUSES

a. Incorrect density adjustments. Refer to Section 4.3.5.7.

b. Incorrect belt guide clearance. Refer to Section 4.3.1.1.

### 4.4.10 INDIVIDUAL CHARACTER GROUPING

PROBABLE CAUSE

a. Binding or sticky hammer operation. The hammer must not touch a neighboring hammer. Replacement of a questionable hammer can be accomplished by referencing Section 4.3.5.2.

### 4.4.11 GENERAL CHARACTER GROUPING

PROBABLE CAUSES

a. Incorrect belt guide clearance. Refer to Section 4.3.1.1.

b. Incorrect tension on the character motor drive belt. Adjust as per instructions in Section 4.3.1.8.

### 4.4.12 ADJACENT COLUMNS NOT PRINTING

PROBABLE CAUSES

a. Blown fuse on hammer driver PCA.

b. Bad connection or seating of coil wire receptacles on coil pins.

c. Complete misadjustment of hammer flight time. Refer to Section 4.3.5.3.

d. Faulty hammer assembly. Refer to Section 4.3.5.2 for replacement.

e. Inoperable hammer driver PCA or hammer buffer PCA. Replace as required.

### 4.4.13 PRINTING GARBLED DATA

PROBABLE CAUSES

a. Faulty electrical connections. Ensure proper mating of I/O connector and connector pins.

b. Damaged character belt. Inspect belt to ensure no character slugs are missing.

c. Incorrect physical alignment or electrical adjustment of the magnetic transducers. Reference Section 4.3.6.2.

### 4.4.14 PRINTING WRONG CHARACTER IN TEST MODE

PROBABLE CAUSE

a. Mechanical and/or electrical misalignment of magnetic transducers. Reference Section 4.3.6.2.

### 4.4.15 HAMMER BAR DOES NOT INITIALIZE

PROBABLE CAUSES

a. Feedback PCA is misaligned. Refer to Section 4.3.5.9.1C for alignment procedure.

b. Feedback PCA is defective. Replace as per Section 4.3.5.9.1.

### 4.4.16 HAMMER BAR DOES NOT SHUTTLE

PROBABLE CAUSES

a. Motor connections or wiring not connected.

b. Control signal not present. Check the "Print Column Status" signal.

### 4.4.17 ERRATIC HAMMER BAR MOTION

PROBABLE CAUSES

a. Hammer bar motion time is incorrect. Verify correct

motion time by referencing Section 4.3.5.9.1C.

b. Defective feedback module. Replace the Feedback PCA by referring to Section 4.3.5.9.1.

c. Defective output stages on the Paper Advance and Hammer Bar Driver PCA. Replace.

d. Feedback wheel misaligned. Realign as per Section 4.3.5.9.2C.

e. Defective drive motor. Replace by referring to Section 4.3.5.9.2.

# SECTION 5

# THEORY OF OPERATION

The printer can be operated in either of two operating modes, an "on-line" (automatic) mode and an "off-line" (manual or test) mode. Although the mechanical operation of the printer is essentially identical in either mode, the logic operations are different for some functions. These differences are covered in the following description.

## 5.1 ON-LINE (AUTOMATIC) MODE

In the "on-line" (automatic) mode of operation, the printer is interfaced with the external controller and printing is accomplished <u>only</u> at those times and in the particular manner determined by the introduction of commands from the external controller. Data entry is initiated by the controller while the Printing and Paper Advance functions can be programmed to be either automatic or externally controllable. In order for the printer to be placed on line, the following conditions must be met:

a. The Print push button must be momentarily depressed.

b. A paper tape must be in the VFU.

c. The VFU gate must be closed and locked in place.

d. Paper must be sensed in the printer.

e. The yoke must be closed and locked.

f. The hammer fuse alarm signal must be inactive (provided this option has been selected).

g. The test switch on the Control Buffer PCA must be in the off position.

## 5.2 "OFF-LINE" (MANUAL OR TEST) MODE

In the manual mode, control of the printer functions is transferred to the internal printer logics. The manual mode allows the user to check out his unit (spacing, paper advance, print character, print quality, etc.) prior to placing the printer on-line. In the manual mode, the external controller may still be interfaced with the printer, but it does not have access to the printer functions. The printer can only be returned "on-line" by first returning the test switch to the off position, and then ensuring conditions 1-7 specified in Section 5.1 exist for on-line operation.

## 5.3 MECHANICAL OPERATION

Figure 5-1 is a diagram depicting the basic printer mechanism. The primary groups shown are paper handling, hammers, character belt and ribbon transport.

### 5.3.1 PAPER HANDLING

The paper is advanced by the two paper feed tractors which are driven by a 3-phase stepper motor; 4 steps (6 LPI) and 3 steps (8 LPI) are required to advance the paper one line. A small holding current is applied to the stepping motor to hold it stationary when paper is not advancing.

When the paper advance signal is generated, 30 volts is applied to the common of the stepping motor. A positive pulse is generated by the Print and Paper Advance PCA logics and is applied to one of the three inputs on the Step Motor PCA. The driver on the Paper Advance and Hammer Bar Drive PCA then applies a low impedance ground to the corresponding winding of the Paper Advance Motor, and the paper is advanced one-fourth of a line for 6 LPI operation, and one-third of a line for 8 LPI operation.

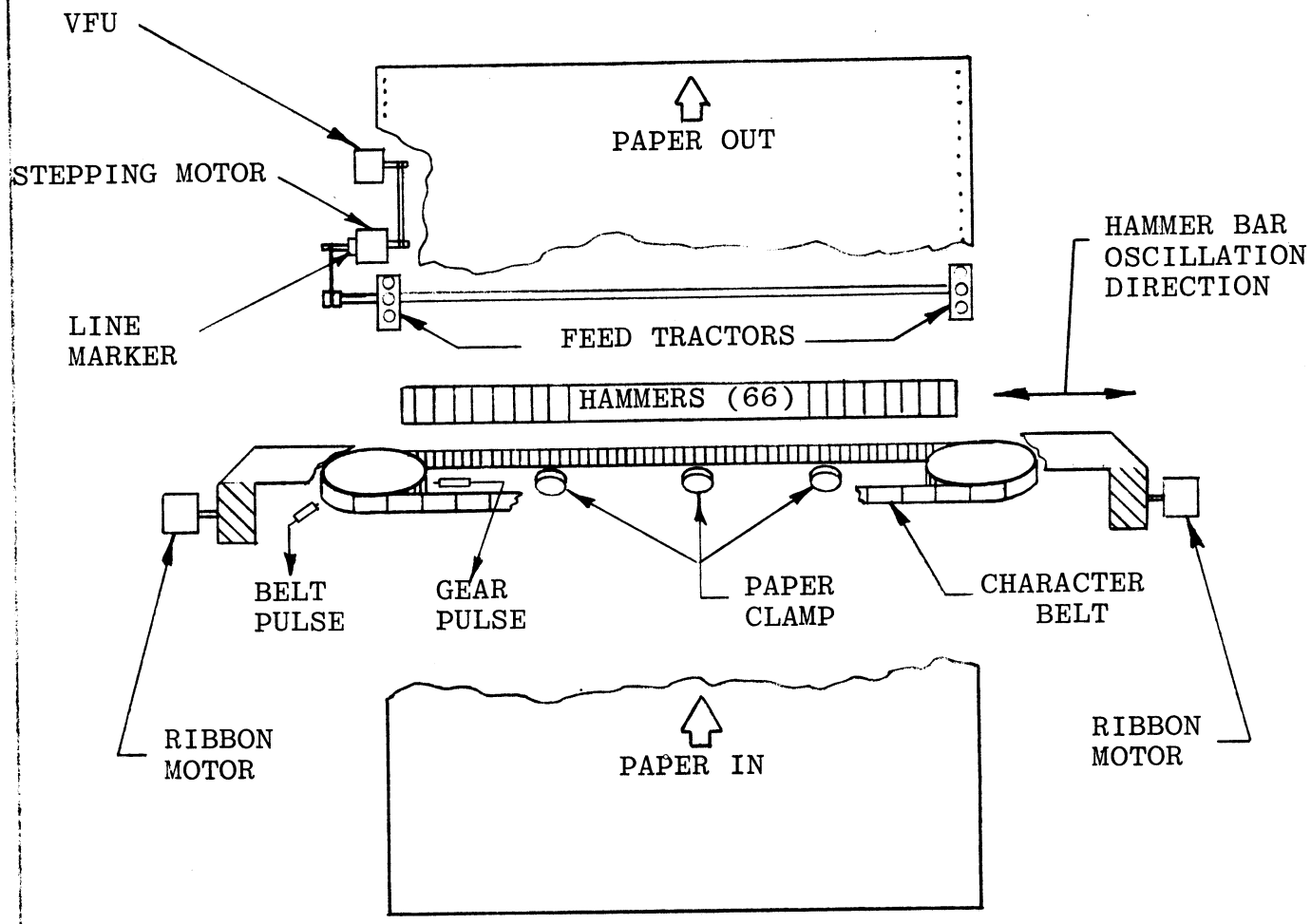


FIGURE 5-1 PRIMARY PRINTER MECHANISMS

Because the stepping motor is also belt-connected to the VFU tape reader, paper advance is accomplished in synchronism with the advance of the VFU tape in which bottom-of-form and top-of-form code perforations have been punched. Detection of these holes, by the phototransistors, can result in additional stepping motor pulses which allow the printer to skip over the forms perforations during printing.

The paper clamps consist of three solenoids with vinyl friction pads. These solenoids are electrically activated to release the paper and deactivated to clamp the paper. The three solenoids and the Paper Clamp PCA are mounted on a bracket attached to the yoke. The clamps will be retracted (solenoids energized) whenever the paper is being moved.

### 5.3.2 CHARACTER BELT

The character belt contains 96 clips, each of which can carry two character slugs. Beginning at the space position, the characters occur consecutively along the belt, in accordance with their logical sequence, according to binary weight, in the USASCII code chart. The belt motor is turned on, and the belt driven whenever printing is to take place (printing is inhibited until the belt is up to speed).

Two magnetic transducers mounted near the left end of the yoke assembly produce the timing signals; Belt Pulse and Gear Pulse. The Belt Pulse signal is generated whenever the character clip with no character slug (space) passes the transducer. This information is used to keep track of the positions of the characters along the belt in relation to the hammers.

There are four gear teeth, and four gear pulses are generated per character clip. These pulses are used to determine the correct interrogation and printing time during the print cycle, since each character clip is four print columns wide.

### 5.3.3 PRINTING

An array of hammers distributed axially along the face of the main printing frame assembly accomplishes the actual printing. There are sixty-six hammers (forty for 80 column printers), the face of each is two print columns wide. One-half of the hammers are mounted on the top of the hammer bar and the other half on the bottom. The hammer bar is moved prior to an odd or even print cycle such that the center of the hammer face is positioned exactly over the particular column to be printed.

The printing is logically programmed to accomplish all of the odd columns print requests prior to any of the even column print requests. To avoid smearing, the hammers are given time to settle between odd/even print requests. In the actual print cycle, the hammer is driven forward about 1/16 inch when its associated solenoid coil is actuated by a print time firing pulse. (The particular hammer would have been "armed" logically earlier.) This hammer movement causes a two column wide segment of the form paper to be pressed forward such that momentary contact is made with the selected characters on the moving belt, the rotating ribbon, and either the odd or the even column of the displaced segment of the form paper.

### 5.3.4 RIBBON TRANSPORT

The ribbon which provides inking of the characters is

continuously moving throughout the print and paper advance cycles. Although it is a dual driven system (two drive motors, two drag brakes, and two clutches) and both motors operate during the ribbon drive cycle, only one motor clutch (left or right) is engaged at any one time. Raised "reversing" bumpers built into each end of the ribbon trip reversing switches as a particular ribbon end is approached. This results in disengagement of one driving motor and engagement of the other. The skewed path of the ribbon across the yoke face allows full width ribbon utilization. The skewed ribbon in conjunction with the plastic ribbon guard serves to maximize ribbon life.

## 5.4 LOGICAL DESCRIPTION

The logic operations of the printer can be considered under five separate aspects: Initialization, data loading, hammer arming (print character selection), hammer firing (printing), and paper advance. In the following discussion of these operations, individual logic elements (gates, registers, flip-flops, etc.) are examined separately to gain a full understanding of the functional relationships in the theory of operation.

### 5.4.1 INITIALIZATION

The initialization sequence is automatically entered when power is first applied to the printer. The power on condition causes the internal circuit elements to be energized and results in the generation of a $\overline{\text{Master Reset SW}}$ signal. This momentary signal, which originates on the Auxiliary PCA is transmitted to the Interface PCA, to the Control Buffer PCA, to the Control Print/ Paper Advance PCA, and to the two Hammer Buffer PCA's. This reset

signal ensures initialization of all active latches and registers which is necessary prior to entering a buffer ready state.

### 5.4.2 DATA ENTRY

There are two types of data, Print Codes and Control Codes, which are presented to the printer. The Print Codes consist of upper and lower case letters, symbols, numbers and those non-printing space characters that ultimately appear in the print-out. All input data is entered in a bit parallel/character serial fashion and is interpreted as being coded in a standard USASCII format.

A data strobe causes each of the seven parallel incoming data bits to be loaded into a Data Entry Register where it is stored until it is either decoded and executed (control codes) by a control code decoding gate or until it is deposited in a Line Buffer Character Register (data bits). These logic units and the elements that control their functions are discussed in the following paragraphs.

#### 5.4.2.1 DATA ENTRY REGISTER

The Data Entry Register (DER) is composed of seven bit, cross-coupled Nand gate latches. Data is introduced into this register which is located on the Register PCA, from the interface directly as it is transmitted from the external controller. If the incoming data character has a one in either or both of the bit 6 or bit 7 USASCII code positions, it will be recognized as a Print Code and entered and stored until it is subsequently transferred into the Line Buffer Character Register. If it does not have a one present in either or both of these positions, it will be recognized as a control code and prevented from entering the

Line Buffer Character Register.

#### 5.4.2.2 CONTROL CODE DECODING GATES

The control code decoding gates check each data character to determine whether it is a valid Print Code or one of the eight different control codes accepted by the printer. The control codes, when detected, are routed for execution to the logic associated with their particular function. These code functions are defined as follows:

LF - Print and line feed; an automatic or operator controlled function.

VT - Vertical tab; advances paper one or two lines.

TOF - Top of form; advances paper to the top of the next form.

CR - Print and carriage return; can be programmed to work with or without a line feed and print.

DC1 - Sets line feed control to single space.

DC2 - Sets line feed control to double space.

DC3 - Turns belt motor on.

DC4 - Turns belt motor off.

#### 5.4.2.3 MOTOR ON/OFF CONTROL CODES

In the on-line mode of operation, the character belt motor-on control code, DC3, is the first code that must be received. The DC3 character will set the Motor On flip-flop on the Control Buffer PCA and the signal Motor On Status will be sent to the Auxiliary PCA to initiate the Motor On sequence. The following logic turns the motor on, detects the "motor up to speed" condition and is located on the Auxiliary PCA.

When the AC supply voltage crosses zero the belt motor latch is set providing a return path for the belt motor voltage and the motor is turned on. When a gear pulse is detected, the Motor-Up-To-Speed Delay and Gear Pulse one-shots are triggered.

Each successive Gear Pulse will retrigger both one-shots until the time between gear pulses is less than the time constant of the Gear Pulse one-shot. This indicates that the belt is moving at the required speed and the Motor-Up-To-Speed Latch is set, disabling the retriggering of the Motor-Up-To-Speed Delay one-shot. The Motor-Up-To-Speed Delay one-shot provides an additional period of time for the belt to gather inertia and when this one-shot times out, Motor In Speed is generated, freeing the logic to begin a load cycle.

A decoded DC4 character resets the Motor On Latch on the Control Buffer PCA and the signal, Motor On Status is dropped. This resets the Motor Up To Speed Latch and the next Gear Pulse can trigger the Motor Up To Speed Delay one-shot. The $\overline{\text{Motor In Speed}}$ signal is dropped which causes printing to cease as the belt is slowed down. When the AC voltage crosses zero the Belt Motor flip-flop is reset and the motor is turned off. The Motor-Up-To-Speed Delay one-shot will be retriggered until no more gear pulses are received, indicating that the belt is stopped.

#### 5.4.2.4 LINE BUFFER CHARACTER REGISTER

The Line Buffer Character Register (LBCR) is a 7-bit wide by 132 bit long, static MOS shift register which stores a full line (132 characters) of Print codes for subsequent printing. The 132 addresses in the LBCR are filled serially as received. After receipt of the first Print Character into address #1, data is

serially loaded into each subsequent address until a full line (132 characters) has been received and then a print cycle is automatically initiated (if that option has been selected). It is not necessary that each printed line be transferred as a 133-bit transfer (132 Print Codes and a form control signal). The receipt of a valid forms control code during the loading cycle can cause automatic filling of any unused addresses with non-printing space codes and a subsequent printout of print codes that are in any address. The LBCR is automatically set to address #1 when the printer is first placed on line and the data characters (Print codes or space codes) are then entered as received in a bit parallel/character serial fashion until a full (132 address) has been loaded. NOTE: 80 column printers require proportional address/bit changes.

During the print cycle, the data in LBCR is compared to the characters on the belt. After a character is printed it is replaced by a space in LBCR. When all characters have been printed, the LBCR contains only spaces. When a "memory equals spaces" condition is recognized, the print cycle ends and paper advance is initiated.

5.4.2.5 LINE BUFFER ADDRESS REGISTER

The Line Buffer Address Register (LBAR) is an additional counter that functions in the data entry cycle. This 8-bit counter keeps track of the address at which a particular data bit in the LBCR is stored. When the printer is first placed on line, the LBAR is set to address #1. As additional data characters are inserted into the LBCR, the LBAR equals the current count of the LBCR position which is addressed.

5.4.2.6 DEPOSIT CHARACTER CYCLE

The deposit character flip-flop circuitry is the key

element in both the data entry/loading and the printing cycles. It is this circuitry, together with the 4 MHz clock generation circuitry, which provides the gating signals that control the loading and printing functions. In the data entry cycle, the received data characters are sequentially strobed into the DER and then loaded into the LBCR (Print codes) or transmitted to functional control electronics (control codes) by the gating of the elements within this circuit. The condition of the deposit character flip-flop circuit elements is determined by the time of receipt of the different data strobe and data character signals within the continuous trains of consecutive 1 u second timing pulses. Since the clock generator is a four phase clock, the data loading can be considered from the point of view of the four different clock pulses, T1 - T4. These clock pulses perform the following functions.

a. The T1 clock pulses initiate and terminate the address compare signals. They also cause resetting of the LBCR and resetting of the LBAR to their initial addresses when the printer is first placed on line (shift LBCR, Inc. LBAR).

b. The T2 pulses initiate and terminate (following a data strobe) the data entry cycles by gating the DEP character flip-flop on and off. They also enable the loading of the current data character into the DER and cause the Reset DER signal to become active.

c. The T3 pulses generate the XFER DER signals which result in the data character being loaded into the DER. The T3 pulses also generate the Space + $ Char En signals.

d. The T4 pulses generate the DEP1FF · DEP2FF signals that cause the data to be strobed out of the DER and into either the LBCR (Print codes) or the control code decoding gates (control codes). The T4 pulses also gate the DEP CHAR 1 and DEP CHAR 2 flip-flop on and off.

In the actual data entry cycle, a data character is entered into the printer when accompanied by a data strobe. The timing pulses (T3 and T4) load the character into the DER (T3) and set the CHAR DEP busy flip-flop (T4) to preclude loading a second bit until the first bit has been processed. A subsequent T4 pulse marks the end of the data strobe and the next T1 clock generates an ADDR COMP. The T4 pulse following the start of the ADD COMP signals the start of the DEP CHAR 1 flip-flop on and the start of the DEP1FF · DEP2FF loading. The following T1 initiates the end of the ADD COMP. The next T2 clock turns the DEP CHAR flip-flop off. The next T4 turns the DEP CHAR 2 flip-flop off and signals the end of the control busy state. The curcuit is now able to load a second character. This sequence continues until all characters have been loaded or until a full line (132 characters) has been entered. The printer is now enabled to enter a scan cycle.

### 5.4.3 SCAN (HAMMER ARMING) CYCLE

When the printer is operating on-line, the scan and print cycle occurs automatically, if that option has been selected, when a full line of data has been stored or when a valid print command has been received. In either case, when the LBAR reaches a count of 132 (Line Buffer Character Register is full), a Legal Address signal is transmitted from the Register PCA to initiate the start of the

scan and print cycle. There are eleven different major logic circuit elements that accomplish these operations. These are discussed in the following paragraphs. In the following discussion, it should be noted that, although the scanning and arming of the hammers is accomplished in one continuous cycle for each line of data, it is discussed as two distinct functions. This is done because the printing must take place in two cycles when printing any given line. The hammer bar is moved far left for odd column printing and far right for even column printing. This is done so that the hammer heads are positioned directly over the column to be printed. Therefore, all of the odd column printing requests must be accomplished (and the hammers allowed to settle) before any of the same hammers can be used for printing of the same characters in even columns.

#### 5.4.3.1 LINE BUFFER REGISTER STATUS CIRCUITRY

There are four different elements--the LBR Full Latch, the LBR Loading gate, the LBR Busy flip-flop and the LBR Busy Delay flip-flop--that operate in the line buffer register status circuit. These elements enable the scan and print operations and signal that a print cycle is underway and that a new data entry cycle should not be attempted. When the Legal Address low signal from the Register PCA is entered into the LBR Full Latch, a number of actions and interactions occur. The following signals are relative.

a. A Control Busy signal to the interface results in a busy notice to the external controller.

b. An inhibit signal is transmitted to the Hammer Buffer PCA's. This is the signal that controls the hammer buffer board latches such that the separately armed hammers will only be fired by a particular print line

(PT T or PT B) firing signal for any given odd or even column printing.

c. The third output of interest, LBR Busy, also figures in the separate, odd or even, print operations. This signal, together with the Step Print Column Status FF signal (from the hammer arming and firing enable circuit), sets the Print Column Status flip-flop, on the Print and Paper Advance Control PCA for either odd column printing (first) or even column printing.

d. There are two other signals of interest out of the line buffer register status circuitry, the $\overline{\text{PA Enable}}$ and the Ribbon Advance. The first is transmitted from the Control Buffer to the Print and Paper Advance Control PCA where it combines with the $\overline{\text{CR} \cdot \text{LBR Busy Delay}}$ signal to enable the print/paper advance phasing flip-flop. The second signal is transmitted to the Auxiliary PCA where it initiates the ribbon motor drive operation.

5.4.3.2 SCAN ENABLE CIRCUIT

The scan enable circuitry is gated on by the receipt of the Reset LBAR and the Legal Address signals. This circuit sets the logic elements which determine the sequence of events in the scan and hammer arming cycles. There are six output signals of interest: HAM ARM EN FF; XFER BRPR TO CCR; HAM ARM INIT; STEP PRT COL STATUS FF; and RESET CCR. These function as follows:

a. The Ham Arm EN FF is transmitted to the character code register on the Register PCA and to the hammer address circuit on the Print/Paper Advance Control PCA. In the first instance, the signal is one of four inputs

(RESET CCR, XFER BRPR to CCR, HAM ARM EN FF, and INC CCR) that control the CCR. In the second instance, the signal is used in gating the arming signals to the different hammer latches.

b. XFER BRPR to CCR causes the belt character present in the belt relative position register to be transferred to the character code register.

c. HAM ARM INIT is one of two paired signals (SPACE CHAR is the other) which gate the All Space Character flip-flop on and off and cause deposit of space characters in the empty LBCR address (this includes unused addresses and also each of the hammer addresses as they are fired).

d. Step PRT Col Status FF is transmitted to the Print/Paper Advance Control PCA as one input (the LBR BUSY FF output is the other) to control the Print Column Status flip-flop.

e. During the scan cycles reset CCR is transmitted from the Control Buffer to the Register PCA to reset the CCR to the LBAR address of the hammer presently being interrogated.

#### 5.4.3.3 BELT RELATIVE POSITION REGISTER

The belt relative position register is an active seven-element register which tracks the belt character in response to the different belt sync pulses from the Print/Paper Advance Control PCA ring counter circuit in relation to the particular hammer being scanned. At the start of the scan cycle, the BRPR is preset to the character code which represents the belt character in front of the column number one when the blank position on the character

belt is detected by the belt magnetic transducer. The BRPR is then decremented through the USASCII code as the belt moves past that particular hammer so that it always displays the character code representing the belt character which is in front of the print column address being scanned.

#### 5.4.3.4 CHARACTER CODE REGISTER

On receipt of an XFER BRPR to CCR signal the character code register, an active seven element register which is incremented at a 250 KHz rate, stores the BRPR character code at the start of the hammer arming scan cycle. When the line buffer character register is at address number one and the character code in the CCR is the code representing the character in front of the first column, a comparison is enabled and the hammer arming is initiated.

#### 5.4.3.5 CHARACTER COMPARE REGISTER

The character compare register, a seven element exclusive or comparator, compares the LBCR and CCR register outputs and transmits character compare and space character, to the character comparison sync circuit (Print and Paper Advance PCA) when the characters coincide.

#### 5.4.3.6 HAMMER ADDRESS LINES

The different hammer arming and firing signals are transmitted from the Register PCA to the different Hammer Buffer PCA latch addresses over the X and Y hammer address lines. The matrix address of the particular hammer to be armed is determined by the intersection of the combined X and Y output signals.

#### 5.4.3.7 LINE BUFFER ADDRESS REGISTER

The Line Buffer Address Register, an 8-bit counter, determines whether a top or a bottom hammer will be enabled as a particular data bit is compared and whether an odd or an even column character comparison is to be made. The LBAR 01 and the LBAR 10 outputs will set the character compare A flip-flop (Print and Paper Advance PCA) and enable top hammers during odd and even column comparisons, respectively. The LBAR 11 and LBAR 00 outputs set the Character Compare B flip-flop and enable the bottom hammers during the respective odd and even column comparisons.

### 5.4.4 PRINT CYCLE

The scanning, arming, and firing of the individual hammers is a continuous, on-going sequence. In the "best case" situation, in which all of the hammers are correctly aligned with the consecutive characters distributed along the belt during scan--the "broadside" condition--the time to print for an odd or even cycle would be 1.66 msec. In the "worst case" condition, wherein the same character is to be printed in every one of the separate addresses, the print rate would be equal to the minimum throughput specified. This worst case condition occurs since the scanning and arming of each of the hammers would require a full character belt set traverse during the interrogation and character comparison for each of the hammer addresses. The following print and paper advance cycle discussions consider the printing as occurring in two distinct times, once for odd column printing, one for even. The actual scanning, arming, and firing of the various hammers is a function of the data entered in the loading cycle and of the physical position of the constantly moving character belt at the time of the initiation of the scan and print cycle.

#### 5.4.4.1 CHARACTER COMPARISON SYNC CIRCUITRY

The character comparison sync circuit synchronizes the arming and firing of the hammers in accordance with the hammer address being scanned and the belt character to be printed. These circuit elements are gated on and off in conjunction with the receipt of the buffer and belt scanning information together with the various P1 - P4 print time signals (from the print time generation circuit) and the T2, T3, and T4 timing signals (from the clock generation circuit on the Control Buffer PCA). As the separate CHAR COMP signals are received (from the Register PCA) in conjunction with a particular LBAR sync signal (LBAR 01, 10, 11, or 00), an EN TOP, or EN BOT signal is generated. This signal (from either the Character Compare A or the Character Compare B flip-flop) is transmitted through the hammer address Y lines together with the different X and Y line LBAR character signals to enable the hammer latches at particular Hammer Buffer PCA addresses. This circuit also causes space characters to be restored into each address as the particular hammer for that address is fired. After all of the odd column printing hammers have fired, the All Space Character flip-flop will be reset and a Legal Address low will again be transmitted to the hammer arm sync circuit (Control Buffer) to trigger the Step Print Column Status flip-flop. This, together with the Space Char signal, causes the Print Column Status flip-flop to signal the start of an even column printing cycle. The printing occurs after the hammer settling one-shot (Control Buffer PCA) fires and times out. This provides a delay of 18 milliseconds such that a just fired hammer has time to settle before firing again for an even column print request. (A delay is necessary since the "last" odd column print request and the "first" even column print request

could both involve the use of the same hammer.)

#### 5.4.4.2 PRINT TIME GENERATION CIRCUITRY

The print time generation circuitry controls the cycling of the various registers called upon in the arming and firing of the hammers and insures that the proper interrogation and print time signals are sent to the different hammers during each of the odd and even printing cycles. As the different character comparisons are made among the hammer addresses and the belt character positions, the interrogate signals (IT) from the print time generation circuit cause consecutive enabling of each of the different hammers and then the subsequent print time signal (PT T OR PT B) causes the hammer to be fired. However, in the case of a conflict (where a comparison reveals that the next print request is for an even column printing of a just fired hammer address), a latch (the Print Column Status flip-flop) is set and the armed hammer waits for another print time signal (PT B if the latch was set for odd column print; PT T if set for even). Initially, all of the possible (non-conflicting) odd and even print requests will be accomplished and space codes will be introduced into the addresses for all of the fired hammers. When a subsequent scan reveals all spaces, the latch will be reset, the hammer settling one-shot will fire, and the remaining "even" column print requests will be accomplished. Then, after the complete line has been printed, the printer will enter a paper advance cycle.

#### 5.4.4.3 OSCILLATING HAMMER BAR CIRCUITRY

When the Power On/Off switch is toggled to the on position,

the occurrence of the Initialization cycle causes the Hammer Bar to move to the full left position in preparation for printing the odd portion of a line. When +5V is first applied to the Paper Advance and Hammer Bar Drive PCA (PA/HBD PCA), an RC circuit activates the $\overline{\text{INITIALIZE}}$ signal which presets the Odd Home Search FF, resets the Even Home Search FF and sets the Phase B Latch. A voltage sensing circuit generates the signal, 30 V SENSE, when the 30 volt supply has risen to approximately 75% of its final value. 30 V SENSE and ODD HOME SEARCH enable $\overline{\text{HAMMER BAR MOTION}}$, which combines with PHASE B LATCH to cause the Phase C driver to energize phase C of the stepping motor which results in a 15 degree step toward the motor phase C position. Interrupter modules on the Feedback PCA generate signals for every 15 degree of motor shaft rotation. The interrupter signal for Phase C, Phase C Pickup, is used to set the Phase C Latch. Setting the Phase C Latch will ensure both the Phase A and Phase B Latches are reset. The Phase C Latch signal also energizes the Phase A driver and thus the motor shaft turns another 15 degrees. In like fashion this sequence occurs for the Phase B driver, then Phase C again and so on. After approximately 90 degrees of rotation the ODD HOME PICKUP signal is sensed in conjunction with Phase A Pickup. The Odd Home Search FF is reset and the hammer bar motion ceases with the bar locked in the full left (odd) position. At this time the 4 KHz CLOCK signal initiates a pulsed holding current to the Phase A driver and thus the motor phase A winding.

During the print cycle, the odd columns are printed and the hammer bar must be in the full left position. When all odd columns have been printed the Print Column Status FF is toggled set and the signal, PRINT COLUMN STATUS FF (high) is sent to the PA/HBD PCA where

it sets the Even Home Search FF. The signal $\overline{\text{EVEN HOME SEARCH}}$ generates $\overline{\text{HAMMER BAR MOTION}}$ thus enabling the oscillating bar stepping motor drivers. The bar is driven 180 degrees horizontally to the right (nominally .100 inch) in twelve discrete 15 degree steps. The stepping sequence is as follows:

B, C  A, B, C,  A, B, C  A, B, C  A

The EVEN HOME PICKUP signal is sensed simultaneously with the fourth PHASE A PICKUP signal. This signal resets the Even Home Search FF which, in turn, causes oscillating bar motion to cease at the full right or Even Home position. Again a pulsed holding current is applied to the Phase A driver by the 4 KHz CLOCK signal.

When the even columns have been printed, the Print Column Status FF is reset and it's output signal sets the Odd Home Search FF. This initiates the hammer bar motion in the left direction until the ODD HOME PICKUP signal causes the bar to stop in the Odd Home position, with holding current applied, in preparation for another line of print.

### 5.4.5 PAPER ADVANCE CYCLE

When a full 132 character line has been printed, the printer automatically enters a paper advance cycle. The end of the printing results in the generation (Control Buffer PCA) of the PAPER CLAMP, $\overline{\text{PA ENABLE}}$, and $\overline{\text{CR.LBR BUSY DLY}}$ signal which initiate the paper advance cycle. The first signal, PAPER CLAMP, energizes the solenoid coils and causes the yoke mounted

paper clamp pads to be withdrawn from the paper. The PA ENABLE and $\overline{\text{CR} \cdot \text{LBR BUSY DLY}}$ signal cause the gating of the 200 Hz clock (Print and Paper Advance PCA) output pulses to the Paper Drive Stepper Motor PCA. The paper is advanced one line for every four stepper motor pulses. The number of stepper pulses (and, consequently, the number of lines advanced) is controlled by the Top of Form, Vertical Tab, Space, and Paper Fold skip control circuits (on the Print and Paper Advance PCA). These circuits together with the VFU and Line Marker Units count the number of stepper motor pulses. The Top of Form and Paper Fold Skip controls work in conjunction with the VFU and a coded punched paper tape in the VFU is belt driven in synchronism with the paper drive motor. When a Top of Form or Bottom of Form code is read by the VFU photodetector (indicating that the paper advance would stop in a fold area), these circuit elements cause the transmission of additional stepper motor pulses so that the fold area is skipped. When paper advance is complete, the Paper Settling one-shot (Control Buffer PCA) is fired. This provides a delay period so that the paper will settle before the next print cycle starts.

### 5.4.6 POWER SUPPLY

Figure 5-2 is the basic block diagram of each of the three power supplies used in the printer. Each supply is composed of a low voltage secondary winding from the power transformer, a bridge rectifier and associated filter capacitor with bleeder resistor, a series pass transistor circuit and an integrated circuit regulator.

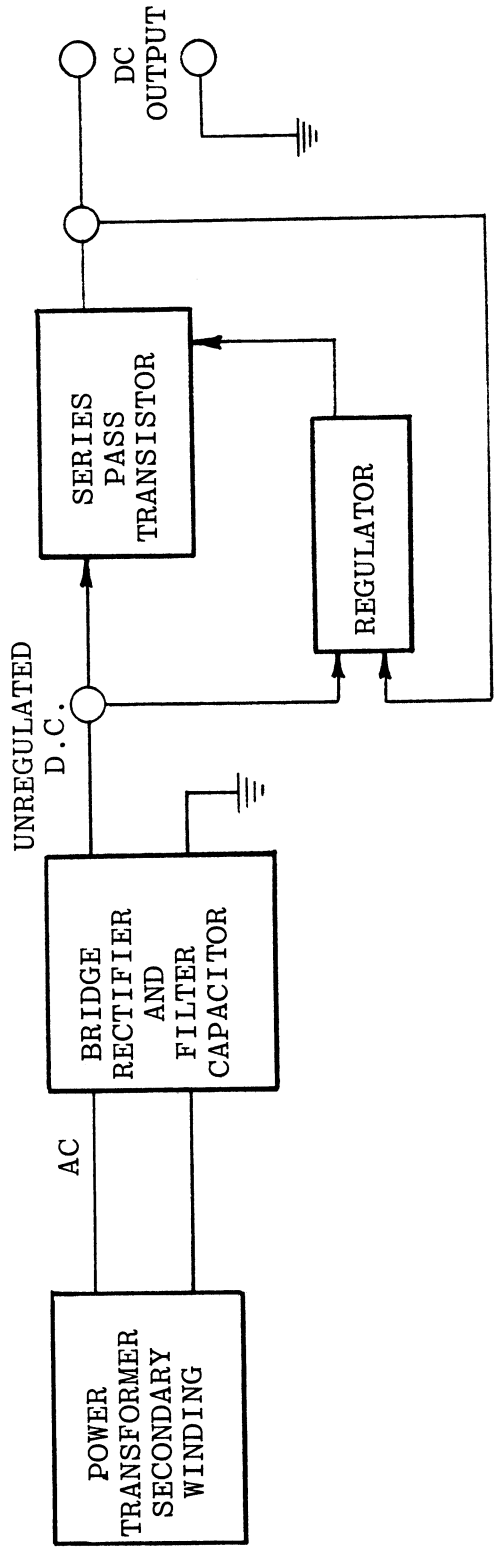


FIGURE 5-2. POWER SUPPLY - BASIC BLOCK DIAGRAM

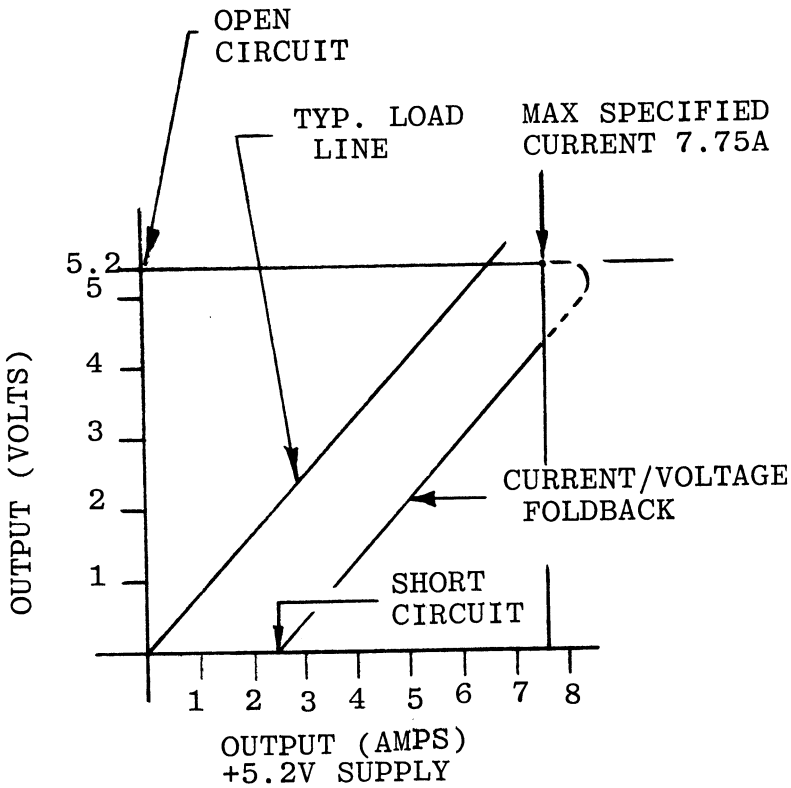


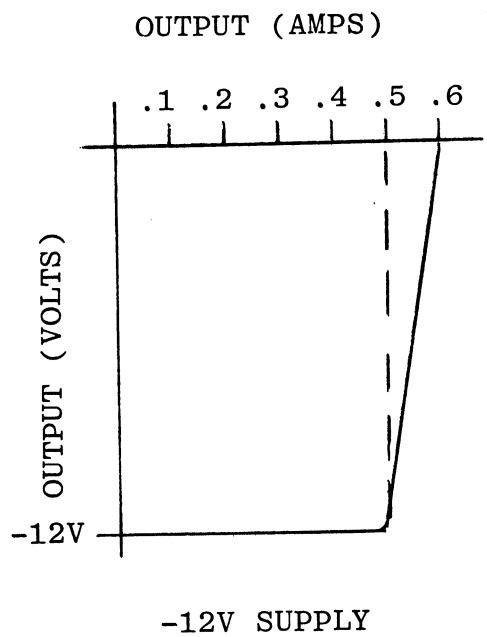


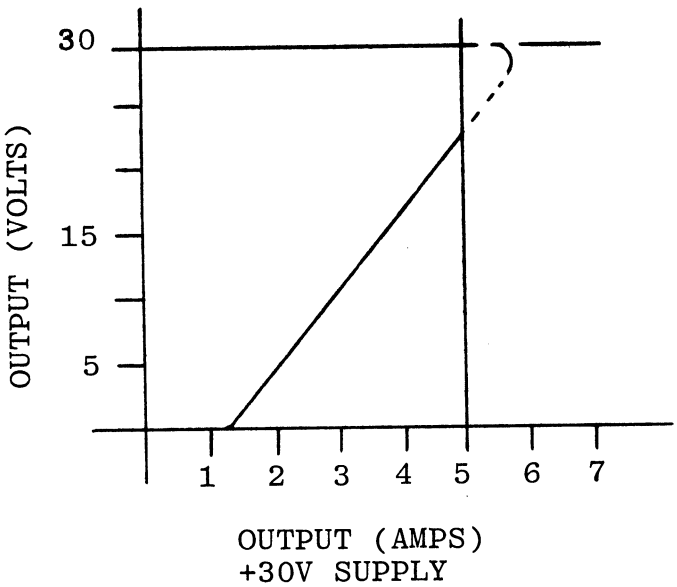


FIGURE 5-3. OUTPUT VOLTAGE/CURRENT CHARACTERISTICS

The bridge rectifier and its associated filter capacitor supplies unregulated direct current to both the series pass transistor circuit and the regulator. The regulator senses the load voltage and controls drive to the series pass transistors, which provide highly regulated, low ripple direct current to the load.

The +30V power supply provides power to three loads: the hammer driver circuit PCA's, the stepping motor PCA, and the paper clamps. The +5.2V power supply provides power to all the logic circuits, the Auxiliary and Interface PCA's, the Line Marker and VFU, and the magnetic pickups. The -12V supply is used exclusively for the MOS shift register circuit on the Register PCA.

All three power supplies have automatic current limiting and, in addition, the +30V and the +5.2V supplies exhibit current/voltage foldback characteristics for load currents in excess of their nominal output values. This feature provides short circuit protection. The output current/output voltage characteristics of each of the power supplies are shown in the Figure 5-3.

The +5.2V supply has an SCR crowbar circuit that trips between +6.1 and +6.3V so that all the TTL logic used in the system is overvoltage protected.

All power supplies are individually fused prior to the bridge rectifiers to protect components in the event of shorts.

## 5.5 INTERFACE THEORY OF OPERATION

### 5.5.1 GENERAL CONSIDERATIONS

Interfaces are available that can handle either all positive

or negative logic levels with the exception of the Master Clear signal. This signal must always be at a negative logic level.

Each input signal is terminated with a single TTL unit load, a 330 ohm resistor to +5V and a 750 ohm resistor to ground. Each output signal is sourced from a SN7437 buffer driver using a 330 ohm resistor to +5V and a 750 ohm resistor to ground. An associated logic ground pin is provided for each assigned signal pin so that the ground signals of a twisted pair can be terminated.

### 5.5.2 DATA INPUT FROM THE EXTERNAL CONTROLLER

#### 5.5.2.1 DATA CHARACTER

Seven Data Character signal lines are provided so that the Character Codes can be entered in a bit parallel/character serial fashion. The least significant bit is Bit One, with the most significant bit being Bit Seven. All data bits must be present at the interface at the leading edge of the Data Strobe and remain stationary until after the Buffer Ready signal goes false.

Data Characters consist of both Print and Control codes. A Data Character is defined as a Control Code if Bits Seven and Six are both false. If either Bits Seven or Six, or both are true, the Data Character is defined as a Print Code. Refer to the ANSCII Code Chart in Section 1 for the Print and Control code assignments.

As each Print Code is transferred to the printer, it is stored in the Line Buffer and remains stored until printed. The first Print Code entered is stored in the first address location

of the Buffer, the second Print Code entered is stored in the second address location, etc. The first Print Code transmitted to the printer following a print operation is always stored in the first address location in the Line Buffer. When printed the first Print Code entered will appear on the paper in the left most print column or Print Column one.

Each Print Code entered is stored in the Buffer until the Buffer contains one complete line of information (132 Print Codes including Spaces). At this time three different actions can take place depending on selected options. Option one will cause the contents of the buffer to be automatically printed and the paper advanced. Option two will cause only the contents of the Buffer to be automatically printed. Option three will continue to accept Print Codes but not store them in the Buffer, with the contents of the Buffer remaining unchanged. The contents of Buffer can only be printed upon command of a Line Feed, Carriage Return, Form Feed (programmed to print and advance), or Vertical Tab (programmed to print and advance). These options are selectable as follows:

a. Automatic Print and Paper Advance.

b. Automatic Print.

c. Print on Command/Paper Advance on Command.

#### 5.5.2.2 SPACE CODE

A Space Code is one of the Print Code assignments, however, no printing actually takes place for this code and, therefore, it appears on the form as a blank.

#### 5.5.2.3 PRINTING CONTROL CODES

In order to print partial lines of information, it is

necessary to transmit to the printer one of the four Control Codes which will cause the printer to automatically print the contents of the Buffer and advance the paper. The action initiated by these Control Codes is defines as follows.

5.5.2.3.1 LINE FEED (LF)

This control code causes the contents of the line buffer to be printed and the moves the paper one or two lines depending on the status of the Line Space Control. Partial lines are printed by sending the Print Codes followed by a Line Feed Code. Only those Print Codes transferred to the printer from the last print operation will be printed.

As long as the Line Buffer is empty of Print Codes successive Line Feed Commands will advance the paper at a rate of 8.33 inches per second.

5.5.2.3.2 CARRIAGE RETURN (CR)

This control code causes the contents of the Line Buffer to be printed. This code is used to print partial lines and also for overprinting.

5.5.2.3.3 VERTICAL TAB (VT)

This control code causes the contents of the Line Buffer to be printed and then slews the paper at a rate of 8.33 inches per second to the next hole in channel six of the eight channel 1 inch paper tape read by the VFU photoelectric reader. This Control Code can be optionally selected to only slew the paper. This option is available as either VT (advance and print) or VT (advance only).

5.5.2.3.4 FORM FEED (FF)

This control code causes the contents of the Line Buffer to be printed and then slews the paper at a rate of 8.33 inches per second to the next hole in channel seven of the eight channel 1 inch paper tape read by the VFU photoelectric reader. This Control Code can optionally be selected to only slew the paper. This option is available as either FF (advance and print) or FF (advance only).

5.5.2.4 NON-PRINTING CONTROL CODES

The four Non-Printing Control Codes are defines as follows:

a. Single Space (DC1): Set the Line Space Control to Single Space.

b. Double Space (DC2): Set the Line Space Control to Double Space.

c. Motor On (DC3): Turn the Font Belt Motor on. The Font Belt Motor should come up to speed within 2 to 3 seconds (worst case) following receipt of command.

d. Motor Off (DC4): Turn the Font Belt Motor off. The Motor is considered off as soon as the command is acted upon.

The other twenty-four possible Control Codes are decoded as No Operation Codes. These NOP Codes are not acted upon or stored in the Line Buffer. The printer completely ignores these Codes, however, the Buffer Ready signal will respond to the Data Strobe in the normal manner as described in Section 5.5.3.1.

5.5.2.4.1 DATA STROBE

A Data Strobe signal must be transmitted to the printer to enter each Data Character Code. In order to guarantee reliable data

transfer operations, the Data Strobe may only go true if the Buffer Ready signal from the printer is true. Once the Data Strobe is transmitted to the printer, the Buffer Ready signal goes false indicating that the Data Character has been accepted by the printer. The Data Strobe must always return false before entering the next Data Character. Once the Data Strobe goes true and the Data Character has been entered, the printer ignores the Data Strobe until the Data Strobe returns false.

The Data Strobe must be true for at least 250 nanoseconds. Once the Buffer Ready Signal goes false the Data Strobe signal may be returned false. In order to achieve the maximum possible data transfer rate of 333,333 characters per second the Data Strobe signal must go false within two microseconds after the Buffer Ready goes false and return true within 250 nanoseconds after the Buffer Ready signal goes true indicating that the printer is ready to receive the next Data Character. If the Data Strobe does not immediately return true within 250 nanoseconds the next Buffer Ready signal may be delayed as much as 1.00 microsecond because of built in synchronization delays between the Data Strobe and Deposit States.

5.5.2.4.2 MASTER RESET

The Master Reset signal is true when at a ground potential and will cause the control logic of the printer to be held in a Reset State as long as the signal is true. The LBAR associated with the Line Buffer will be reset to the first column location address by the Master Reset signal.

The Font Belt Motor will be turned off if the Motor-Always On Toggle Switch is in the Remote Position, while the Line Space Control is returned to the Single Space condition and the On Line signal is reset to a false level. If a print cycle is in process the cycle will be aborted with the Line Ready returning true, and the paper advance cycle, if in process, will also be aborted.

The Master Reset Signal must be true for at least one (1) microsecond to ensure sensing of the signal by the printer electronics.

### 5.5.3 PRINTER OUTPUT SIGNALS

#### 5.5.3.1 BUFFER READY

The Buffer Ready signal is transmitted by the printer and when true signifies the printer is ready to accept a Data Strobe. The Buffer Ready signal goes true once the operator has depressed the Print pushbutton located on the control panel of the printer, provided the printer controller logic is Ready and the Character Belt Drive Motor is up-to-speed.

When AC Power is turned on, the Buffer Ready signal shall initially be false and the Print Pushbutton must be depressed in order to enable the signal. Once the Print Pushbutton has been depressed the Buffer Ready signal will go true even though the Font Belt Motor may not be up to required speed.

Depressing the Stop PB will cause the Buffer Ready signal to go false provided a Data Strobe is not present.

The Buffer Ready signal will go false 0.75 to 1.75 microseconds from the leading edge of the Data Strobe signal and will remain false until the printer has acted upon the Data Character.

If the Data Character is a Print Code, the Buffer Ready will remain false for two (2) microseconds, which is the time it takes to store the Print Code in the Line Buffer. Once the Print Code is stored, the Buffer Ready signal will again go true. For each Print Code entered, the Buffer Ready signal will go through this cycle.

Upon receiving the Print Code that completes a full print line of information, the Buffer Ready signal remains false until the automatically-initiated print cycle has been completed, if either the Automatic Print and Paper Advance or Automatic Print Option has been selected. As soon as the print cycle has been completed the Buffer Ready signal will go true requesting the next data transfer. If the Command Print and Paper Advance Option has been selected the Buffer Ready signal will continue to respond to each Data Strobe in the above fashion.

If the Data Character is a NOP Control Code, the Buffer Ready signal will go false for the time specified for a Print Code although no operation will take place within the printer.

If the Data Character is a Control Code, the Buffer Ready signal will go false for the time required by the printer to initiate the defined action. The response of the Buffer Ready signal is given for each Control Character as follows.

5.5.3.1.1 LINE FEED (LF)

The Buffer Ready will go false for the time required to print the line of information stored in the Line Buffer. Once the print cycle has been completed, the Buffer Ready signal will go true.

5.5.3.1.2 CARRIAGE RETURN (CR)

The Buffer Ready will go false for the time required to print

the line of information stored in the Line Buffer. Once the print cycle has been completed, the Buffer Ready signal will go true.

5.5.3.1.3 VERTICAL TAB (VT)

The Buffer Ready will go false for the time required to print the line of information stored in the Line Buffer. Once the print cycle has been completed, the Buffer Ready signal will go true.

If Vertical Tab has optionally been programmed to <u>only</u> slew paper, the Buffer Ready signal will only remain false until that action can be initiated.

5.5.3.1.4 FORM FEED (FF)

The Buffer Ready will go false for the time required to print the line of information stored in the Line Buffer. Once the print cycle has been completed, the Buffer Ready signal will go true.

If Form Feed has optionally been programmed to <u>only</u> slew paper, the Buffer Ready signal will only remain false until that action can be initiated.

The Buffer Ready signal for the above four (4) control Codes will return true immediately following the completion of a Print cycle. The paper advance cycle will be starting when the Buffer Ready signal returns true. If a subsequent LF, CR, VT, or FF Control Code is received while the paper advance cycle is in process, the Buffer Ready signal shall remain false until the paper advance cycle has been completed and during the ensuring print cycle.

5.5.3.1.5 SINGLE SPACE (DC1)

The Buffer Ready signal will go false for the time specified

for a Print Code. The same sequence control is used within the printer although the code is not stored in the Line Buffer.

5.5.3.1.6 DOUBLE SPACE (DC2)

The Buffer Ready signal will go false for the time specified for a Print Code. The same sequence control is used within the printer although the code is not stored in the Line Buffer.

5.5.3.1.7 MOTOR ON (DC3)

The Buffer Ready signal will go false until the Character Belt Motor has come up to speed. If the motor does not come up to speed, the Buffer Ready signal will remain false. Depressing the Master Reset Pushbutton will return the Buffer Ready signal to a true condition.

5.5.3.1.8 MOTOR OFF (DC4)

The Buffer Ready signal will go false when the Character Belt Motor has fallen below speed. Depressing the Master Reset Pushbutton will return the Buffer Ready signal to a true condition.

5.5.3.2 ON LINE

The On Line signal will go true once the Print Pushbutton is depressed if all of the following conditions exist.

a. The VFU gate is locked closed.

b. A paper tape is in the VFU.

c. Paper is in the printer.

d. The yoke is locked closed.

e. There is no hammer fuse alarm. (Optional)

The On Line signal will remain true as long as none of the conditions go false. If the Stop PB is depressed, the VFU gate is unlocked, the paper tape comes out of the VFU, the printer runs out of paper, the yoke is unlocked or a hammer fuse opens, (if this option is incorporated) the On Line signal will go false at the beginning of the next print cycle.

The On Line signal will be false after turning on the AC Power.

5.5.3.3 LINE READY

The Line Ready signal will be true as long as the printer is not in a print cycle. Whenever the printer is in a print cycle, the Line Ready signal will be false. The Line Ready signal will be true after turning on AC power.

5.5.3.4 BELT MOTOR IN SPEED

The Belt Motor-In-Speed output signal will be true after the Character Belt Motor has come up to speed.

If the Character Belt Motor should drop out of speed, or if the AC Power to the Font Belt Motor is turned off, the Belt Motor-In-Speed signal will go false.

5.5.3.5 PAPER OUT

The Paper Out output signal is true when the bottom edge of the last form is 2 1/3 inches below the print line. Once the signal goes true, the signal will remain true until paper is reloaded and

the yoke is closed and locked.

5.5.3.6 ALARM

The Alarm output signal is true and at ground potential only if:

a. The Paper Out condition is detected.

b. The yoke latch is unlatched, or

c. One or more of the hammer driver fuses has blown, (if this option is incorporated in the logics).

# SECTION 6

## PC ASSEMBLIES AND SUBASSEMBLIES

This section contains PC Assembly Logic Diagrams, Schematics, and Interconnection Diagrams.


| SECTION | DESCRIPTION |
|---|---|
| 6-1.1 | Contents |
| 6-1.2 | Logic Diagram Reading Key |
| 6-2 | Interface PC Assembly |
| 6-3 | Control Buffer Assembly |
| 6-4 | Control Board PRT/PA Assembly |
| 6-5 | Register Board PC Assembly |
| 6-6 | Hammer Buffer Assembly |
| 6-7 | Hammer Driver PC Assembly |
| 6-8 | Paper Advance and Hammer Bar Drive |
| 6-9 | Paper Clamp Assembly |
| 6-10 | Auxiliary PC Board Assembly |
| 6-11 | Power Supply PC Board |
| 6-12 | VFU Phototransistor Assembly |
| 6-13 | VFU LED Assembly |
| 6-14 | Pushbutton Assembly |
| 6-15 | Feedback PC Board Assembly |
| 6-17.1 | Yoke Interconnection |
| 6-17.2 | Interface to Controller |
| 6-17.3 | Interconnection Schematic |
| 6-17.4 | Interconnection Schematic |
| 6-17.5 | Hammer Interconnection |
| 6-17.6 | Hammer Interconnection |
| 6-17.7 | Power Supply Interconnection |

The logic flow of Section 6 is in a left to right direction. Circuit inputs and continuation inputs are located on left-hand side of the drawing.

Circuit outputs and continuation outputs are located on right-hand side of the drawing.

The following is an example of Section 6 logic diagram inter-connections.

INPUTS

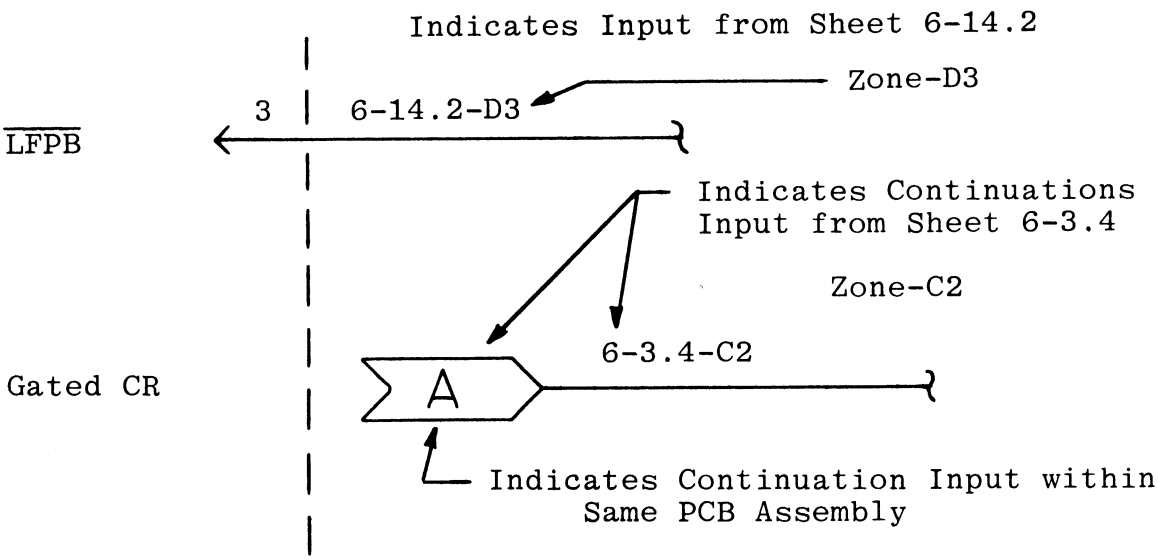


OUTPUTS

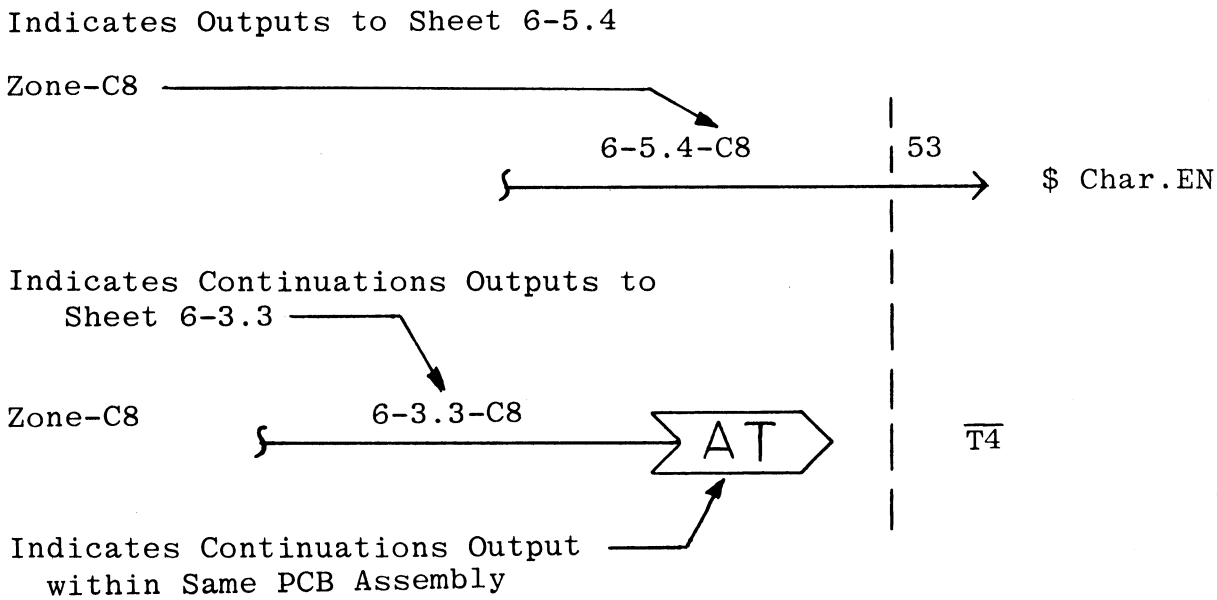

| REVISIONS | | | | | |
|---|---|---|---|---|---|
| ECO | SYM | DESCRIPTION | ORIG | DATE | APPROVED |
| 0 | A | DRN DR00218 | P.H.B. | 2/18/77 | TH |

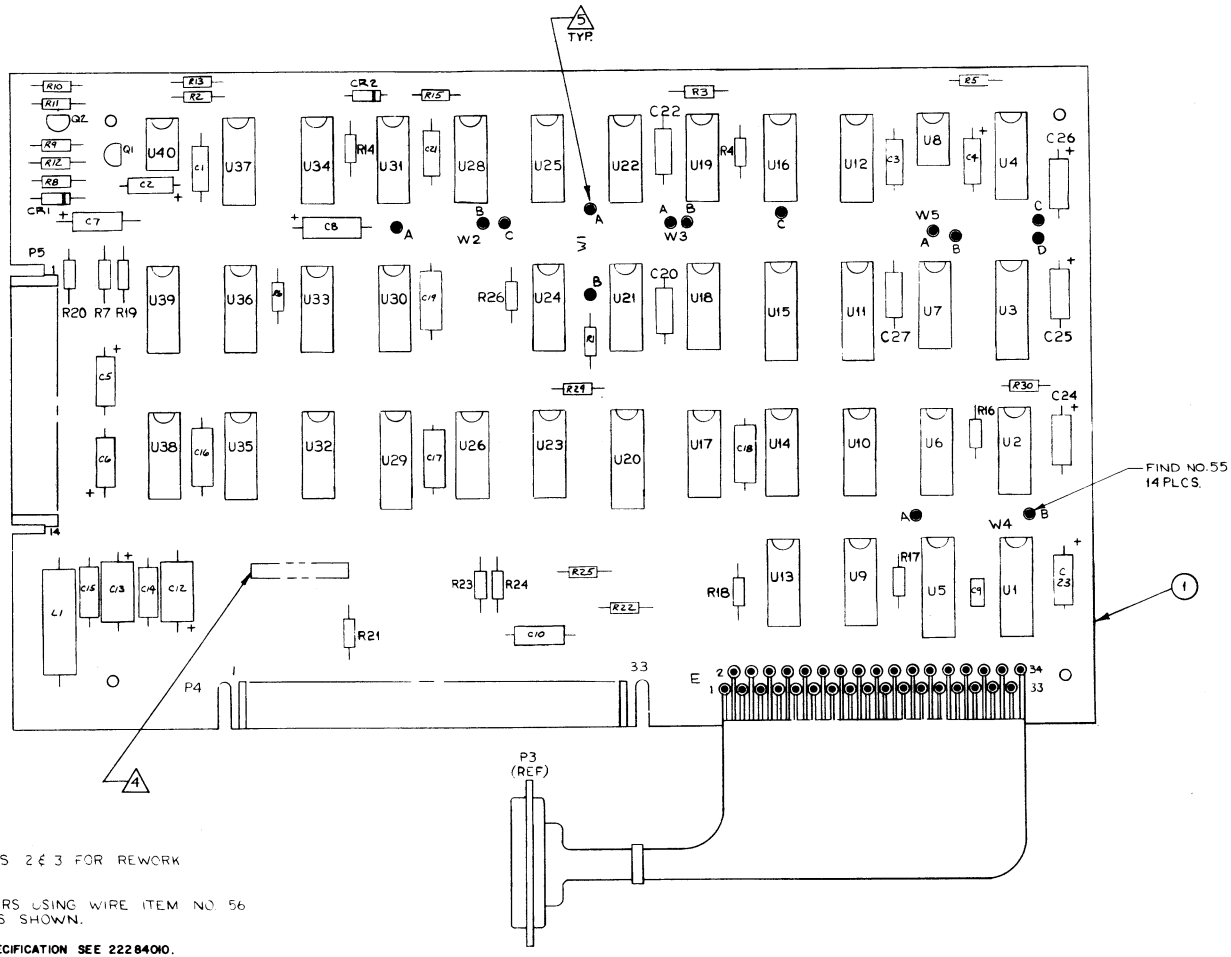


7. REFER TO SHEETS 2 & 3 FOR REWORK INSTRUCTIONS.

6. INSTALL ALL JUMPERS USING WIRE ITEM NO. 56 APPROXIMATELY AS SHOWN.

5. FOR CONFIGURATION SPECIFICATION SEE 22284010.

4. RUBBER STAMP UNPROGRAMMED BOARD P/N & REV LEVEL APPROXIMATELY AS SHOWN.

3. MAX. COMPONENT HEIGHT IS .300 IN. HIGH.

2. FOR MASTER LOGIC/SCHEMATIC SEE DRAWING 21040790

1. FOR ASSEMBLY PROCEDURE SEE DATA 100 SPEC 21100010.

NOTES:

FOR PARTS LIST SEE SHEETS 4,5 & 6

| IT | PART NO | QTY | DESCRIPTION |
|---|---|---|---|

DATA 100

TITLE: P.W. BD. ASSEMBLY, INT. R.F. SERIAL PARALLEL

ORIGINATOR P.H.B. 2-18-77

APPROVALS

DOCUMENT NUMBER: 81040790 A

SIZE D

DR

DO NOT SCALE PRINT

SCALE 2/1

SHEET 1 OF 6

310153-1A 310152-2A

INTERFACE ASSEMBLY (SERIAL PARALLEL)

| PART Nº | DESCRIPTION |
|---|---|
| 66040790 | P.W. Board Interface (Serial Parallel) |
| 86130298 | Cable, Assy. Interface |
| 52251515 | Capacitor, 100pf, 200 VDC +10% |
| 52132120 | Capacitor, .01 uf, 80 VDC, +10% |
| 52325358 | Capacitor, 1 uf, 35 VDC, +10% |
| 52325055 | Capacitor, 2.2 uf, 6 VDC, +10% |
| 52325227 | Capacitor, 4.7 uf, 20 VDC, +10% |
| 52325127 | Capacitor, 40 uf, 10 VDC, +10% |
| 52325138 | Capacitor, 100 uf, 10 VDC, ±10% |
| 53358000 | Choke, 27 MH |
| 51631003 | Diode, 1N914B |
| 51320000 | I.C., 7400 |
| 51320001 | I.C., 7402 |
| 51320002 | I.C., 7404 |
| 51320005 | I.C., 7440 |
| 51320010 | I.C., 7410 |
| 51320013 | I.C., 7437 |
| 51320019 | I.C., 7474 |
| 51320031 | I.C., 7408 |
| 51320032 | I.C., 7413 |
| 51330009 | I.C., 9322 |
| 51330039 | I.C., 74193 |
| 51330041 | I.C., 74180 |
| 51330045 | I.C., 7496 |

INTERFACE ASSEMBLY (SERIAL PARALLEL)

| PART № | DESCRIPTION |
|---|---|
| 51330091 | I.C., 74164 |
| 51340900 | I.C., 9615 |
| 51340901 | I.C., 9614 |
| 51421010 | I.C., NE/SE555 Timer |
| 56232151 | Miniature Spring Socket |
| 54400077 | Resistor, 33 Ohms, 1/4W, +5% |
| 54400082 | Resistor, 51 Ohms, 1/4W, +5% |
| 54400261 | Resistor, 100 Ohms, 1/4W, +5% |
| 54400278 | Resistor, 510 Ohms, 1/4W, +5% |
| 54400279 | Resistor, 560 Ohms, 1/4W, +5% |
| 54400285 | Resistor, 1K Ohms, 1/4W, +5% |
| 54400473 | Resistor, 4.7K Ohms, 1/4W, +5% |
| 54400493 | Resistor, 33K Ohms, 1/4W, +5% |
| 54400505 | Resistor, 100K Ohms, 1/4W, +5% |
| 54820036 | Resistor Network, 470 Ohms |
| 54820046 | Resistor Network, 1K Ohms |
| 51122310 | Transistor 2N3904 |
| 51188000 | Transistor 2N4893 |
| 56248020 | Wire, 30AWG, Teflon |

PROGRAMMING

INTERFACE CIRCUIT BOARD ASSEMBLY

22284010-A125/A126

HARRIS

| | W1 | W2 | W3 | W4 | W5 |
|---|---|---|---|---|---|
| A125 | AB | AB | OPN | AB | AC<br>BD |
| A126 | AB | AC | OPN | AB | AC<br>BD |

TO BE USED WITH ASSEMBLY NO. 81040790 and SCHEMATIC NO. 21040790

SHEET NUMBERS

| REVISION LEVEL | 1 | 2 | 3 | 4 | 5 | 6 | 7 | 8 | 9 | 10 | 11 | 12 | 13 | 14 | 15 | 16 | 17 | 18 | 19 | 20 | 21 | 22 | 23 | 24 | 25 | 26 | 27 | 28 | 29 | 30 | 31 | 32 | 33 | 34 | 35 | 36 | 37 | 38 | 39 | 40 | 41 | 42 | 43 | 44 | 45 | 46 | 47 | 48 | 49 | 50 |
|---|---|---|---|---|---|---|---|---|---|---|---|---|---|---|---|---|---|---|---|---|---|---|---|---|---|---|---|---|---|---|---|---|---|---|---|---|---|---|---|---|---|---|---|---|---|---|---|---|---|---|
| | A | A | A | A | | | | | | | | | | | | | | | | | | | | | | | | | | | | | | | | | | | | | | | | | | | | | | | |
| | B | | | | | | | | | | | | | | | | | | | | | | | | | | | | | | | | | | | | | | | | | | | | | | | | | | |

| REVISIONS | | | | | |
|---|---|---|---|---|---|
| REV | ECO | DESCRIPTION | DRFT. | DATE | CHK'D |
| A | ~~0~~ | DRN DR00218 | P.H.B. | 2-18-77 | TH |
| B | DR00782 | SEE ECO | B.W. | 12-29-77 | DBH |

1. FOR CONFIGURATION SPECIFICATION, SEE 22284010.
2. EXAMPLE OF ZONE AND TAG LINES;

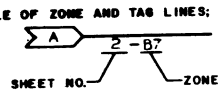


NOTES:
1. UNLESS OTHERWISE SPECIFIED;
ALL RESISTORS ARE IN OHMS; ±5%; 1/4W
ALL CAPACITORS ARE IN MICROFARADS

| | | | |
|---|---|---|---|
| DATA 100 | TITLE: BOARD LOGIC DIAGRAM INTERFACE, SERIAL PARALLEL | | |
| ORIGINATOR P.H.B. 2-18-77 | | | |
| APPROVAL 1/4/77 | | | |
| APPROVAL 6/14/77 | | | |
| 6/14/77 | SIZE D | DOCUMENT NUMBER DR 21040790 | REV B |
| | SCALE ~~x~~ | SHEET 1 OF 4 | PAGE |

610057-B

| IC | REF. DES. | SPARE GATES |
|---|---|---|
| 7400 | U26 | A1,2,3; C8,9,10; D11,12,13 |
| 7402 | U19 | C8,9,10; D11,12,13 |
| | U22 | A1,2,3 |
| | U37 | A1,2,3 |
| 7404 | U16 | A1,2 |
| 7410 | U12 | A1,2,12,13 |
| 7413 | U24 | A1,2,4,5,6 |
| 7440 | U36 | A1,2,4,5,6 |
| 7474 | U30 | B8-13 |
| 9615 | U1 | B9,10,11,13,14,15 |
| 54820036 | U9 | 1,10-13 |
| 54820046 | U13 | 1-5 |

| POWER DISTRIBUTION FOR IC'S | | |
|---|---|---|
| REFERENCE DESIGNATIONS | +5V | GND |
| U9 | 14 | — |
| U13 | — | 14 |
| U2,4,6,7,10,12,14,16-19,21-26, 28,30-39 | 14 | 7 |
| U11,15 | 5 | 12 |
| U8,40 | 8 | 1 |
| U ,3,5,20,29 | 16 | 8 |

| HIGHEST REF. DES. | REF. DESIG. NOT USED |
|---|---|
| C27 | C11 |
| CR2 | — |
| Q2 | — |
| R30 | R27,28 |
| U40 | U27 |

CONFIGURATION TABLE 3

| PROGM. | FUNCTION | | | | | | | | |
|---|---|---|---|---|---|---|---|---|---|
| | | | | | PARITY | | | BAUD RATE | |
| JUMPER | SERIAL | PARALLEL | 64 CHAR | 96 CHAR | EVEN | ODD | IGNORE | 6.5 USEC | 7.0 USEC |
| W1 | A-B | OPEN | — | — | — | — | — | — | — |
| W2 | — | — | A-B | A-C | — | — | — | — | — |
| W3 | — | — | — | — | A-C | B-C | OPEN | — | — |
| W4 | A-B | OPEN | — | — | — | — | — | — | — |
| W5 | — | — | — | — | — | — | — | A-C, B-D | A-D, B-C |

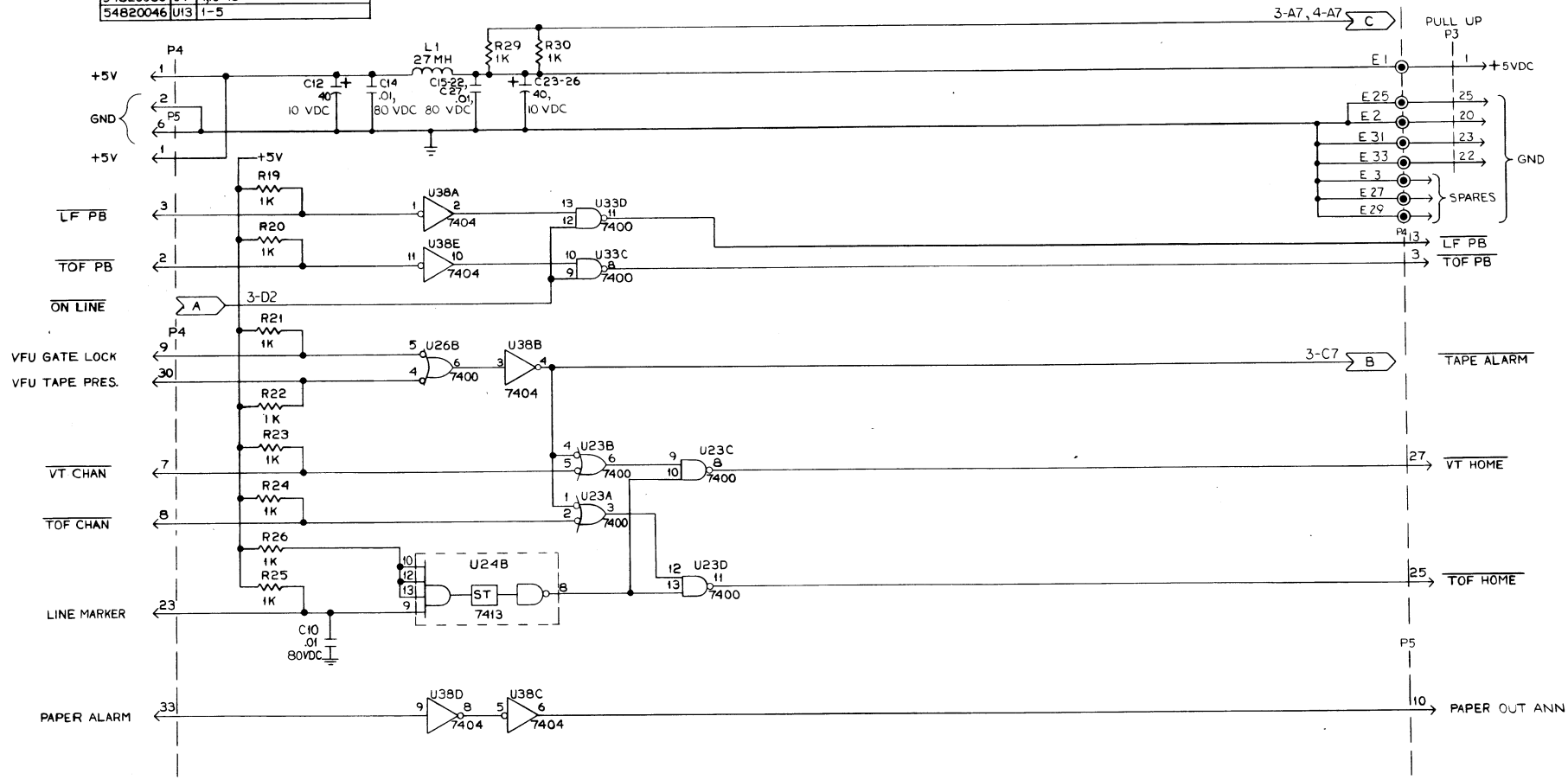


DATA 100 | SIZE D | 21040790 | REV A | SCALE | SHEET 2 OF 4

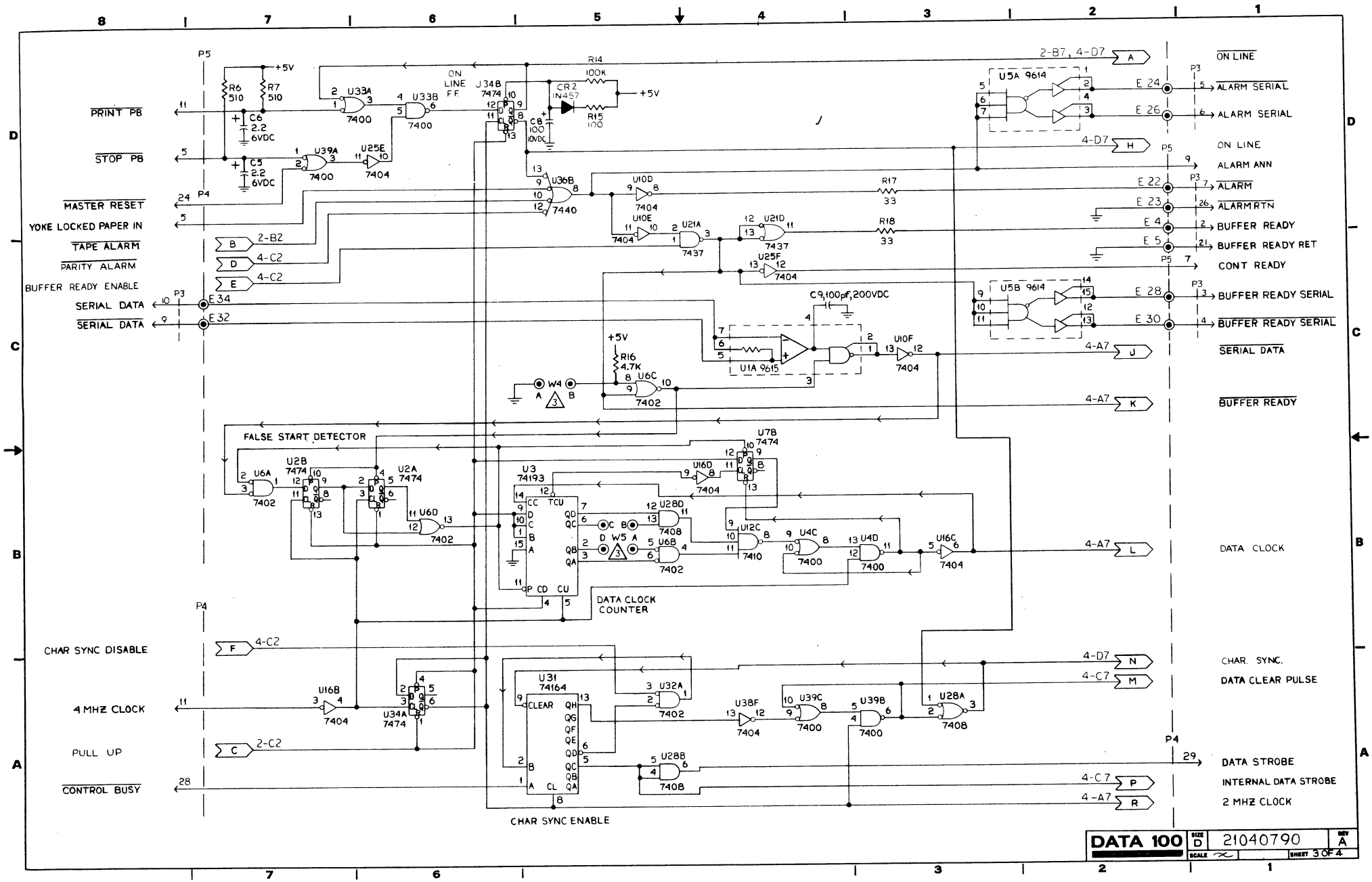
PRINT PB
STOP PB
MASTER RESET
YOKE LOCKED PAPER IN
TAPE ALARM
PARITY ALARM
BUFFER READY ENABLE
SERIAL DATA
SERIAL DATA
CHAR SYNC DISABLE
4 MHZ CLOCK
PULL UP
CONTROL BUSY
ON LINE
ALARM SERIAL
ALARM SERIAL
ON LINE
ALARM ANN
ALARM
ALARM RTN
BUFFER READY
BUFFER READY RET
CONT READY
BUFFER READY SERIAL
BUFFER READY SERIAL
SERIAL DATA
BUFFER READY
DATA CLOCK
CHAR. SYNC.
DATA CLEAR PULSE
DATA STROBE
INTERNAL DATA STROBE
2 MHZ CLOCK
FALSE START DETECTOR
DATA CLOCK COUNTER
CHAR SYNC ENABLE
ON LINE F.F.
DATA 100
21040790
SIZE D
REV A
SCALE
SHEET 3 OF 4

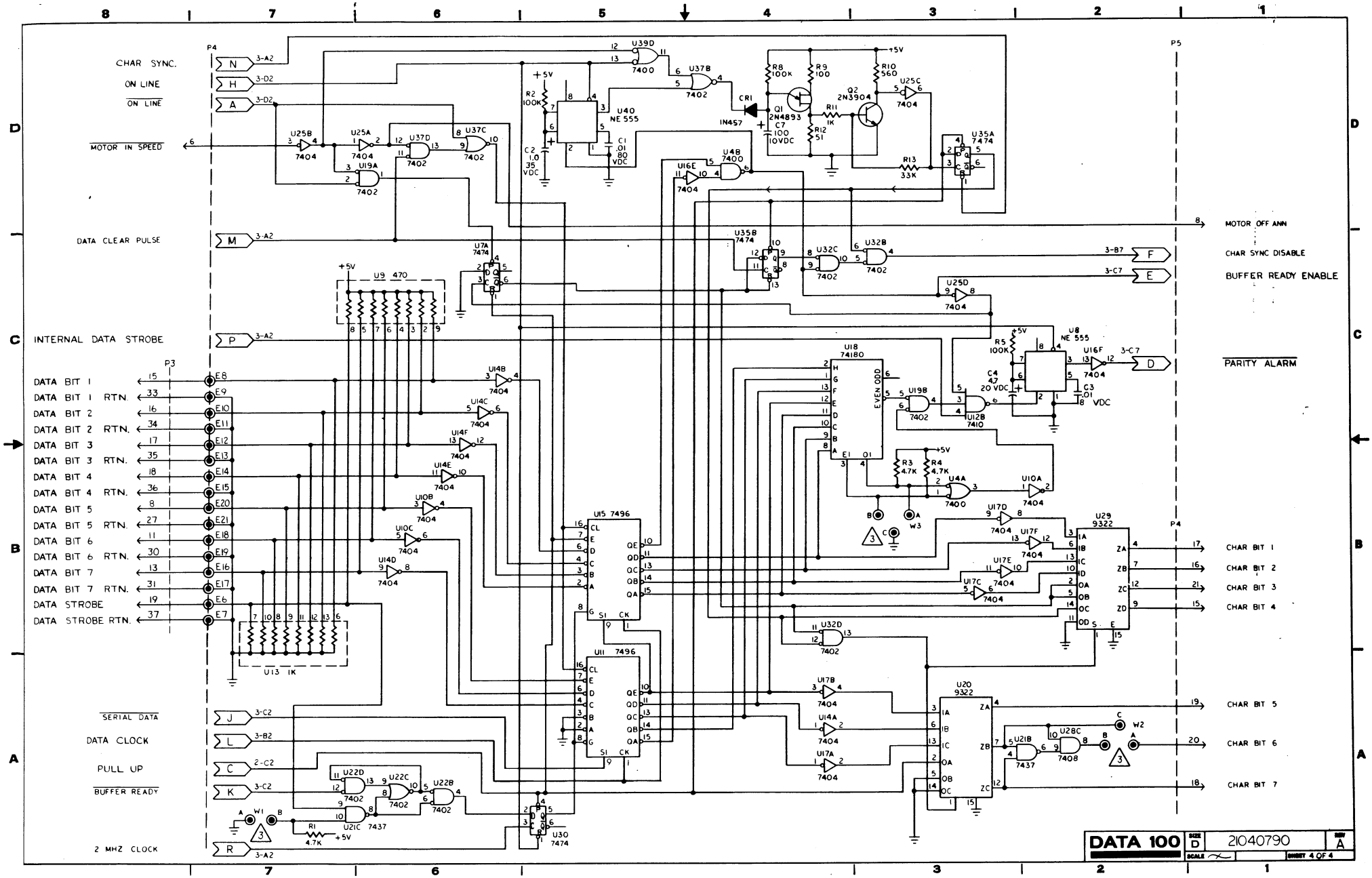
CHAR SYNC.
ON LINE
ON LINE
MOTOR IN SPEED
DATA CLEAR PULSE
INTERNAL DATA STROBE
DATA BIT 1
DATA BIT 1 RTN.
DATA BIT 2
DATA BIT 2 RTN.
DATA BIT 3
DATA BIT 3 RTN.
DATA BIT 4
DATA BIT 4 RTN.
DATA BIT 5
DATA BIT 5 RTN.
DATA BIT 6
DATA BIT 6 RTN.
DATA BIT 7
DATA BIT 7 RTN.
DATA STROBE
DATA STROBE RTN.
SERIAL DATA
DATA CLOCK
PULL UP
BUFFER READY
2 MHZ CLOCK
MOTOR OFF ANN
CHAR SYNC DISABLE
BUFFER READY ENABLE
PARITY ALARM
CHAR BIT 1
CHAR BIT 2
CHAR BIT 3
CHAR BIT 4
CHAR BIT 5
CHAR BIT 6
CHAR BIT 7
U40 NE 555
U8 NE 555
U18 74180
EVEN ODD
U15 7496
U11 7496
U29 9322
U20 9322
U9 470
U13 1K
U30 7474
DATA 100
21040790
SHEET 4 OF 4

DATA 100 CONFIDENTIAL INFORMATION

| REV | ECO | DESCRIPTION | ORIG. | DATE | APPD |
|---|---|---|---|---|---|
| A | | DRN DR00418 | | | |

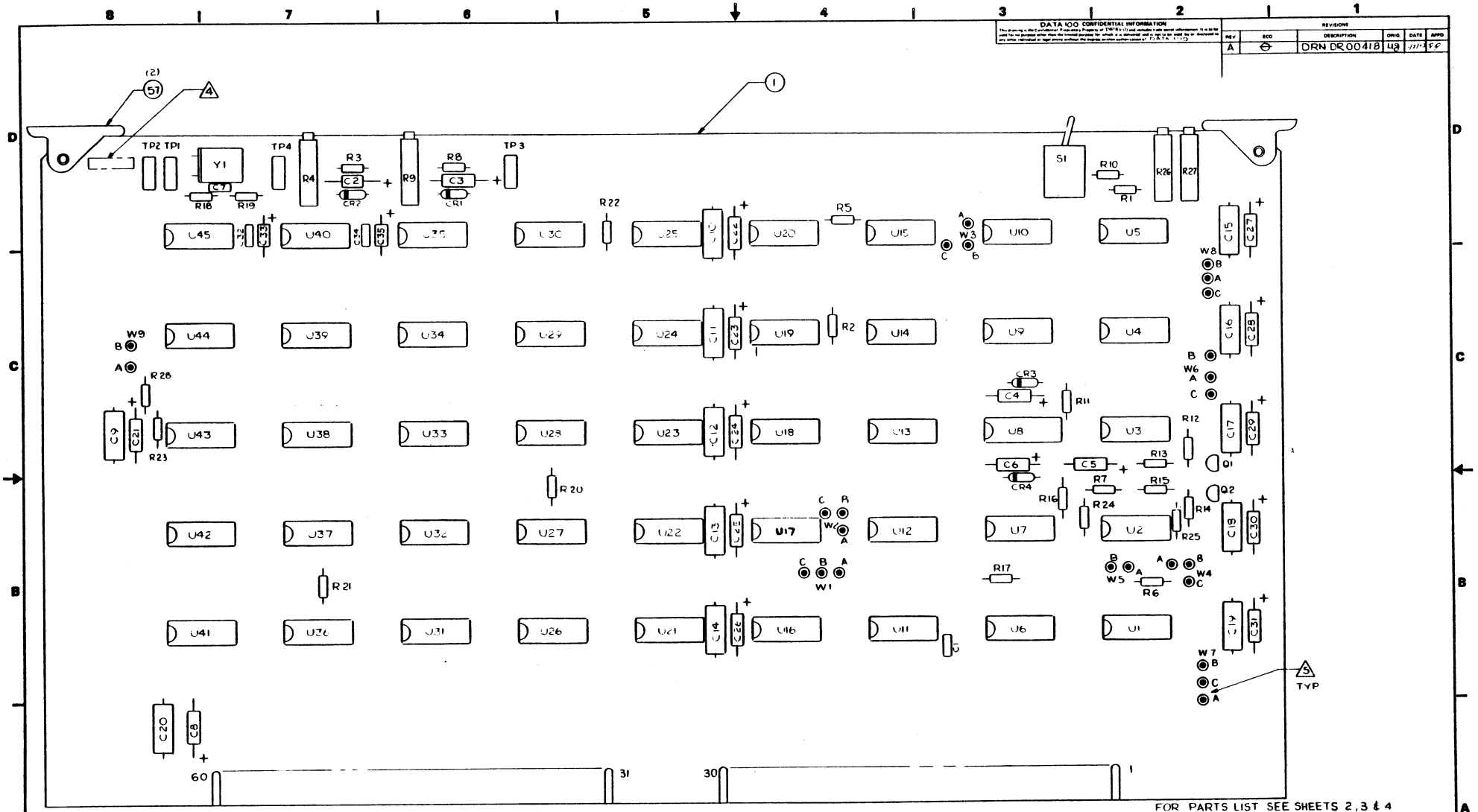


FOR PARTS LIST SEE SHEETS 2, 3 & 4

3. FOR CONFIGURATION SPECIFICATION SEE 22284010.
4. RUBBER STAMP UNPROGRAMMED BOARD P/N APPROXIMATELY AS SHOWN.

NOTES:

3. MAX. COMPONENT HEIGHT IS .310 IN. HIGH.
2. FOR MASTER LOGIC/SCHEMATIC SEE DRAWING 21040470
1. FOR ASSEMBLY PROCEDURE SEE DATA 100 SPEC 21100010.

COMPONENT SIDE

TOLERANCE UNLESS OTHERWISE SPECIFIED: 3 PLACE ± 2 PLACE ± ANGLES ±

| ITEM | PART NO | QTY | DESCRIPTION |
|---|---|---|---|

DATA 100 CORPORATION

DRAWN 6/5/77
CHECKED
APPROVED

TITLE: P. W. BOARD ASSEMBLY CONTROL BUFFER PH II

SIZE D | DOCUMENT NUMBER 81040470 | REV A

DR | DO NOT SCALE PRINT | SCALE 2/1 | SHEET 1 OF 4

| REVISIONS | | | | | |
|---|---|---|---|---|---|
| REV | ECO | DESCRIPTION | DRFT. | DATE | CHKD |
| A | [illegible] | PKN DR [illegible] 418 | [illegible] | [illegible] | [illegible] |

SHEET NUMBERS

| REVISION LEVEL | 1 | 2 | 3 | 4 | 5 | 6 | 7 | 8 | 9 | 10 | 11 | 12 | 13 | 14 | 15 | 16 | 17 | 18 | 19 | 20 | 21 | 22 | 23 | 24 | 25 | 26 | 27 | 28 | 29 | 30 | 31 | 32 | 33 | 34 | 35 | 36 | 37 | 38 | 39 | 40 | 41 | 42 | 43 | 44 | 45 | 46 | 47 | 48 | 49 | 50 |
|---|---|---|---|---|---|---|---|---|---|---|---|---|---|---|---|---|---|---|---|---|---|---|---|---|---|---|---|---|---|---|---|---|---|---|---|---|---|---|---|---|---|---|---|---|---|---|---|---|---|---|
| | A | A | A | A | A | A | A | | | | | | | | | | | | | | | | | | | | | | | | | | | | | | | | | | | | | | | | | | | | |

4. PAPER SETTING TIME IS SET SUCH THAT TP4 GOES LOW 5MS (4MSIPS) AFTER PAPER ADVANCE GOES LOW (U40-3)

3. FOR CONFIGURATION SPECIFICATION, SEE 22284010.

2. EXAMPLE OF ZONE AND TAG LINES;

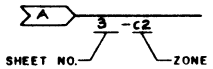


1. UNLESS OTHERWISE SPECIFIED;
ALL RESISTORS ARE IN OHMS; ±5%; 1/4W
ALL CAPACITORS ARE IN MICROFARADS

| DATA 100 | BOARD SCHEMATIC CONTROL BUFFER PH 2 | |
|---|---|---|
| ORIGINATOR | | |
| APPROVAL | | |
| APPROVAL | | |
| D | 21040470 | A |
| SCALE | DR SHEET 1 OF 7 | PAGE |

| POWER DISTRIBUTION FOR I.C'S | | |
|---|---|---|
| REF DESIGNATION | +5V | GND |
| U1 THRU U7, U9 THRU U45 | 14 | 7 |
| U8 | 16 | 8 |

| HIGHEST REF DES | REF DES NOT USED |
|---|---|
| C35 | — |
| CR4 | — |
| R28 | — |
| Q2 | — |
| U45 | — |
| BK | — |

| CONFIGURATION CHART (3) | | | | | | | | | |
|---|---|---|---|---|---|---|---|---|---|
| FUNCTION | W1 | W2 | W3 | W4 | W5 | W6 | W7 | W8 | W9 |
| 1. PRINTER TYPE A) 60, 90, 120, 135, 165 IPS W/ ROLLERS | | | | | | AC | AC | AC | |
| B) 120 IPS W/ CLAMPS | | | | | | AB | AB | AB | |
| 2. PRT/PA RESPONSE A) AUTO PRT | AC | AC | | AB | OPEN | | | | |
| B) AUTO PRT/PA | AB | AB | | AB | OPEN | | | | |
| C) PRT ON CMD | AC | AC | | AB | AB | | | | |
| 3. DATA STROBE INHIBIT A) IN | | | AB | | | | | | |
| B) OUT | | | AC | | | | | | |
| 4. SELF TEST INHIBIT A) IN | | | | | | | | | OPEN |
| B) OUT | | | | | | | | | AB |

| ONE SHOT PERIODS | | | | |
|---|---|---|---|---|
| FUNCTION | PRINTER MODEL | TRIPOT | TEST POINTS | PERIOD |
| CYCLE INHIBIT | ALL MODELS | R9 | TP3 | 60 ±5MS |
| HAMMER SETTLING | ALL MODELS | R26 | U9-10 | 17 ± .1MS |
| PAPER CLAMP DELAY | 120 IPS W/CLAMPS | R27 | U8-6 | 17 ± .1MS |
| MOTION DELAY | 60, 90, 120 135, 165 W/ROLLERS | R27 | U8-6 | 21 ± 1MS |
| PAPER SETTLING | 60, 90, 120 135, 165, IPS W/ROLLERS 120 - W/CLAMPS | R4 | TP4 | (4) 5 ± .25MS |
| | 165 IPS | R4 | TP4 | (4) 4 ± .1MS |

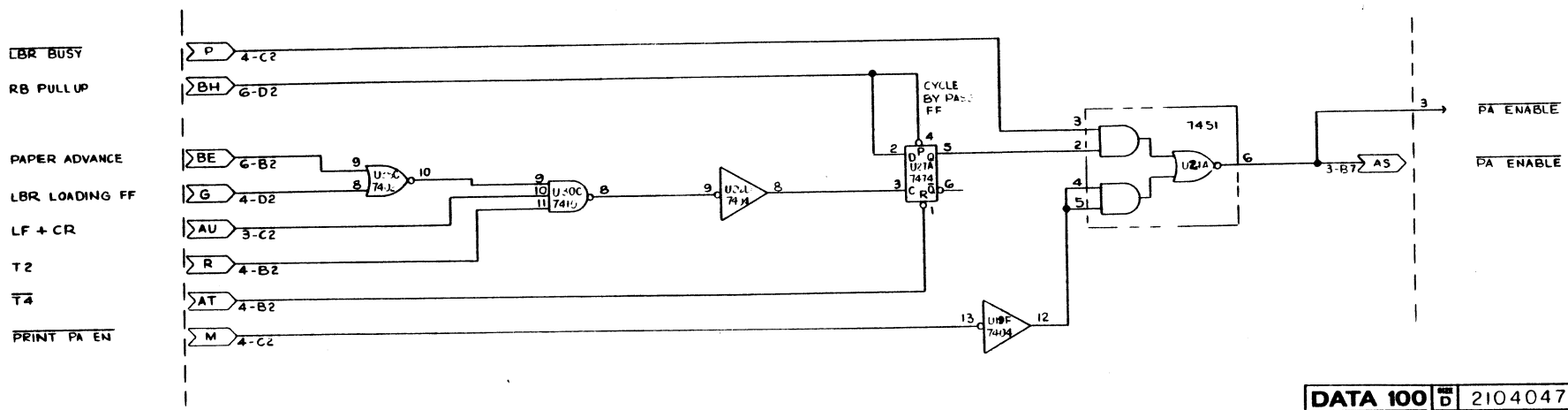


DATA 100 | SIZE D | 21040470 | REV A | SCALE X | SHEET 2 OF 7

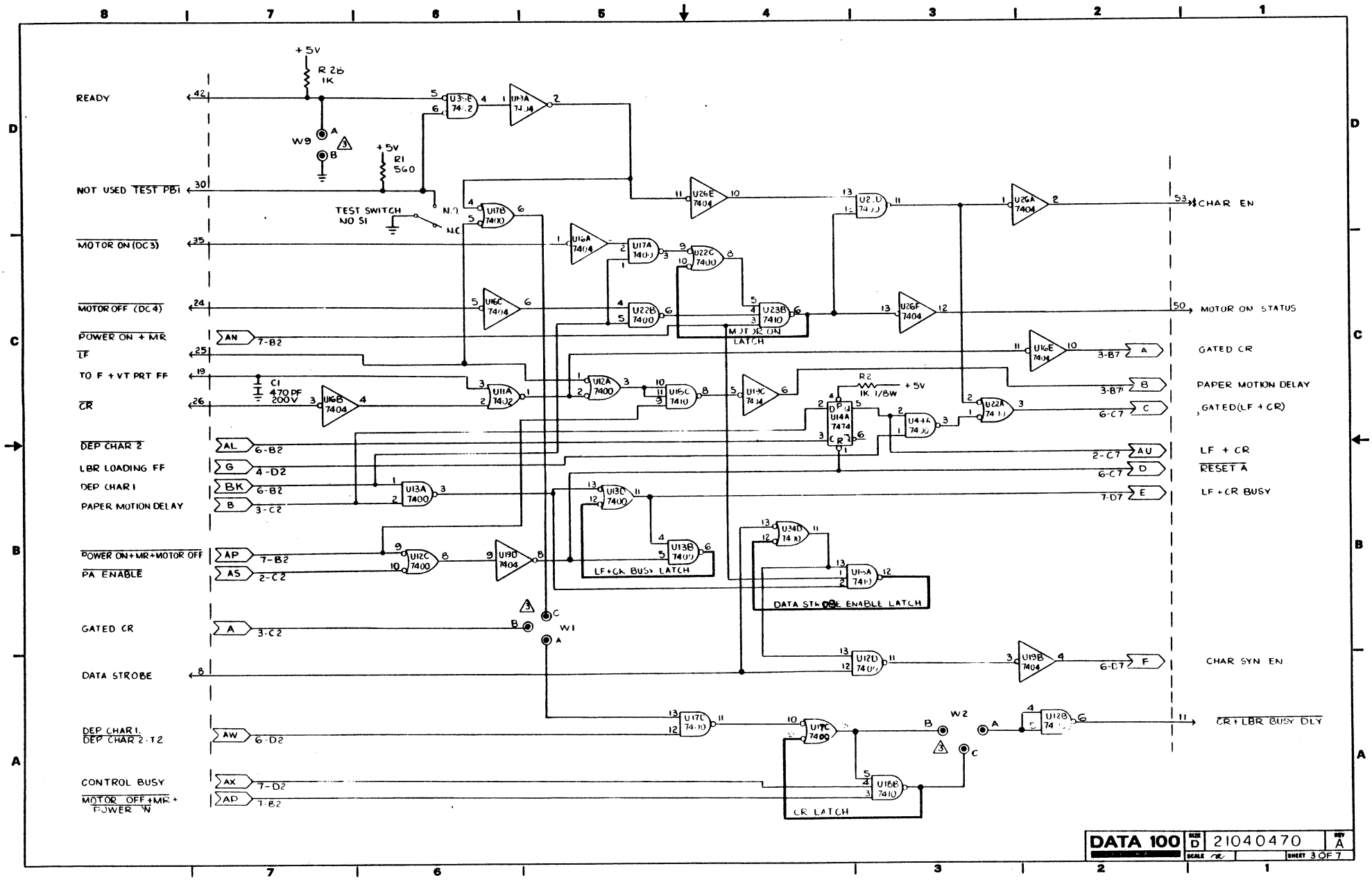
READY
NOT USED TEST PB1
MOTOR ON (DC3)
MOTOR OFF (DC4)
POWER ON + MR
LF
TO F + VT PRT FF
CR
DEP CHAR 2
LBR LOADING FF
DEP CHAR 1
PAPER MOTION DELAY
POWER ON + MR + MOTOR OFF
PA ENABLE
GATED CR
DATA STROBE
DEP CHAR 1, DEP CHAR 2 · T2
CONTROL BUSY
MOTOR OFF + MR + POWER ON
TEST SWITCH NO S1
MOTOR ON LATCH
LF + CR BUSY LATCH
DATA STROBE ENABLE LATCH
CR LATCH
CHAR EN
MOTOR ON STATUS
GATED CR
PAPER MOTION DELAY
GATED (LF + CR)
LF + CR
RESET A
LF + CR BUSY
CHAR SYN EN
CR + LBR BUSY DLY
DATA 100
21040470
SHEET 3 OF 7

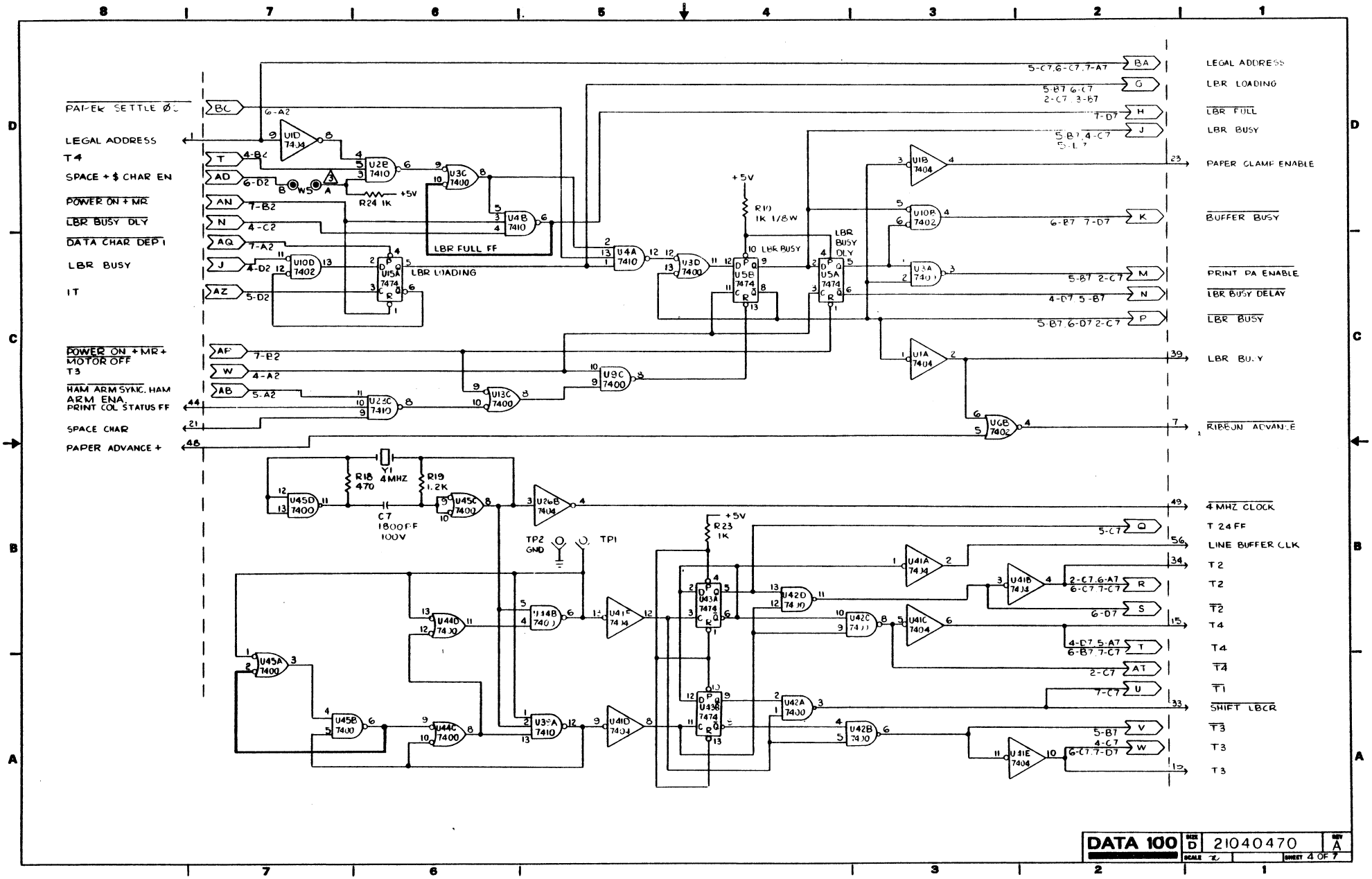


DATA 100 | SIZE D | 21040470 | REV A | SCALE X | SHEET 4 OF 7

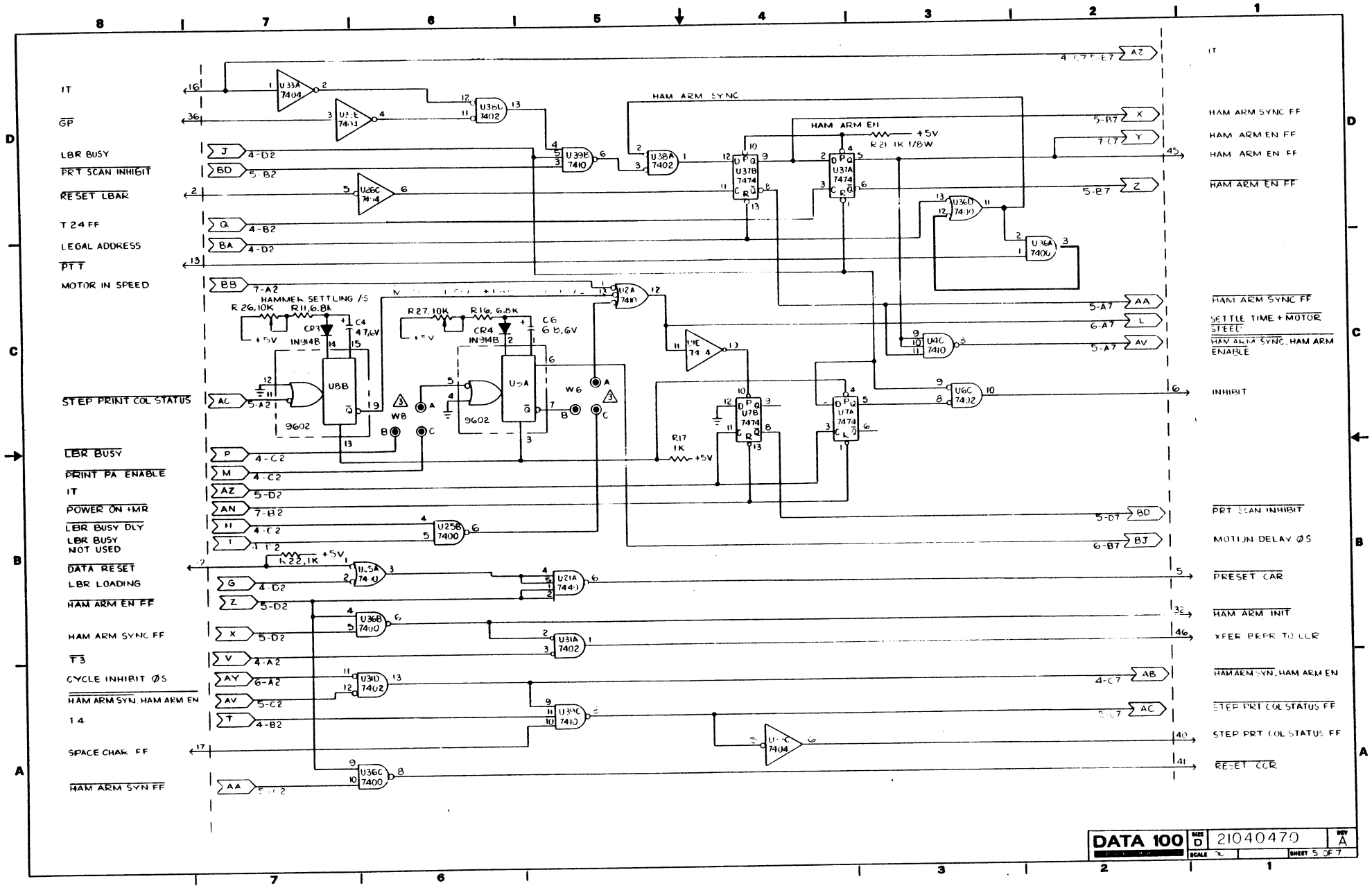
IT
GP
LBR BUSY
PRT SCAN INHIBIT
RESET LBAR
T 24 FF
LEGAL ADDRESS
PTT
MOTOR IN SPEED
STEP PRINT COL STATUS
LBR BUSY
PRINT PA ENABLE
IT
POWER ON +MR
LBR BUSY DLY
LBR BUSY NOT USED
DATA RESET
LBR LOADING
HAM ARM EN FF
HAM ARM SYNC FF
T3
CYCLE INHIBIT ØS
HAM ARM SYN. HAM ARM EN
T4
SPACE CHAR FF
HAM ARM SYN FF
HAMMER SETTLING /S
HAM ARM SYNC
HAM ARM EN
HAM ARM SYNC FF
HAM ARM EN FF
HAM ARM EN FF
HAM ARM EN FF
HAM ARM SYNC FF
SETTLE TIME + MOTOR STEEL
HAM ARM SYNC. HAM ARM ENABLE
INHIBIT
PRT SCAN INHIBIT
MOTION DELAY ØS
PRESET CAR
HAM ARM INIT
XFER PREP TO CCR
HAM ARM SYN. HAM ARM EN
STEP PRT COL STATUS FF
STEP PRT COL STATUS FF
RESET CCR
DATA 100
21040470
SHEET 5 OF 7

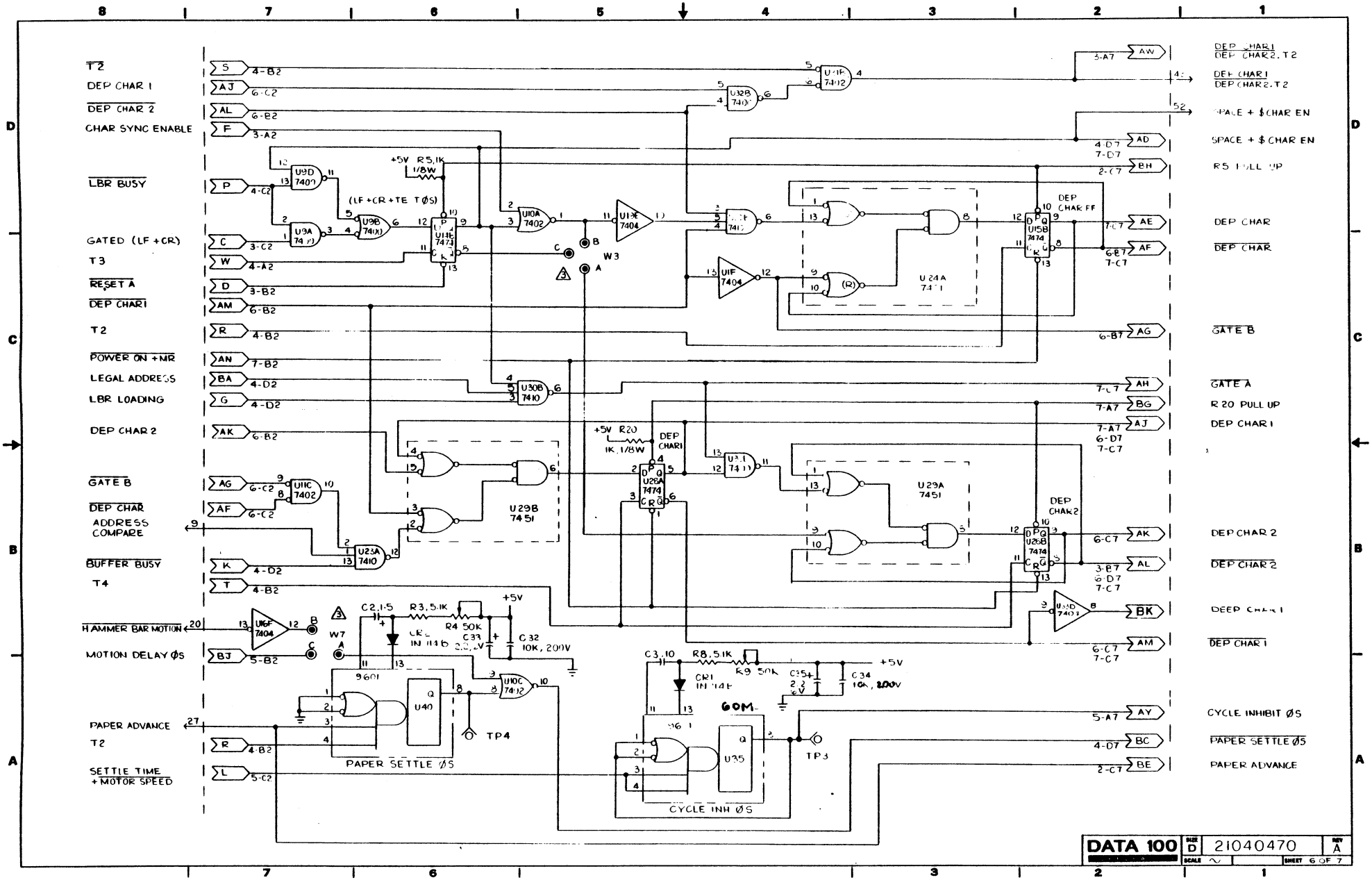
T2
DEP CHAR 1
DEP CHAR 2
CHAR SYNC ENABLE
LBR BUSY
GATED (LF+CR)
T3
RESET A
DEP CHAR1
T2
POWER ON +MR
LEGAL ADDRESS
LBR LOADING
DEP CHAR 2
GATE B
DEP CHAR
ADDRESS COMPARE
BUFFER BUSY
T4
HAMMER BAR MOTION
MOTION DELAY ØS
PAPER ADVANCE
T2
SETTLE TIME + MOTOR SPEED
DEP CHAR1
DEP CHAR2.T2
DEP CHAR1
DEP CHAR2.T2
SPACE + $CHAR EN
SPACE + $ CHAR EN
R5 PULL UP
DEP CHAR
DEP CHAR
GATE B
GATE A
R 20 PULL UP
DEP CHAR 1
DEP CHAR 2
DEP CHAR 2
DEEP CHAR 1
DEP CHAR 1
CYCLE INHIBIT ØS
PAPER SETTLE ØS
PAPER ADVANCE
+5V R5,1K 1/8W
(LF+CR+TE TØS)
+5V R20 1K,1/8W
DEP CHAR1
DEP CHAR FF
DEP CHAR2
U 24A 7451
U 29A 7451
U 29B 7451
U 29A 7474
U 15B 7474
U 26B 7474
W3
W7
C2,1.5
R3,5.1K
R4 50K
C33 22,2V
C 32 10K, 200V
CR1 IN 914B
C3,10
R8,5.1K
R9 50K
C35 22
C 34 10K, 200V
60M
PAPER SETTLE ØS
CYCLE INH ØS
TP4
TP3
DATA 100
SIZE D
21040470
REV A
SCALE ~
SHEET 6 OF 7

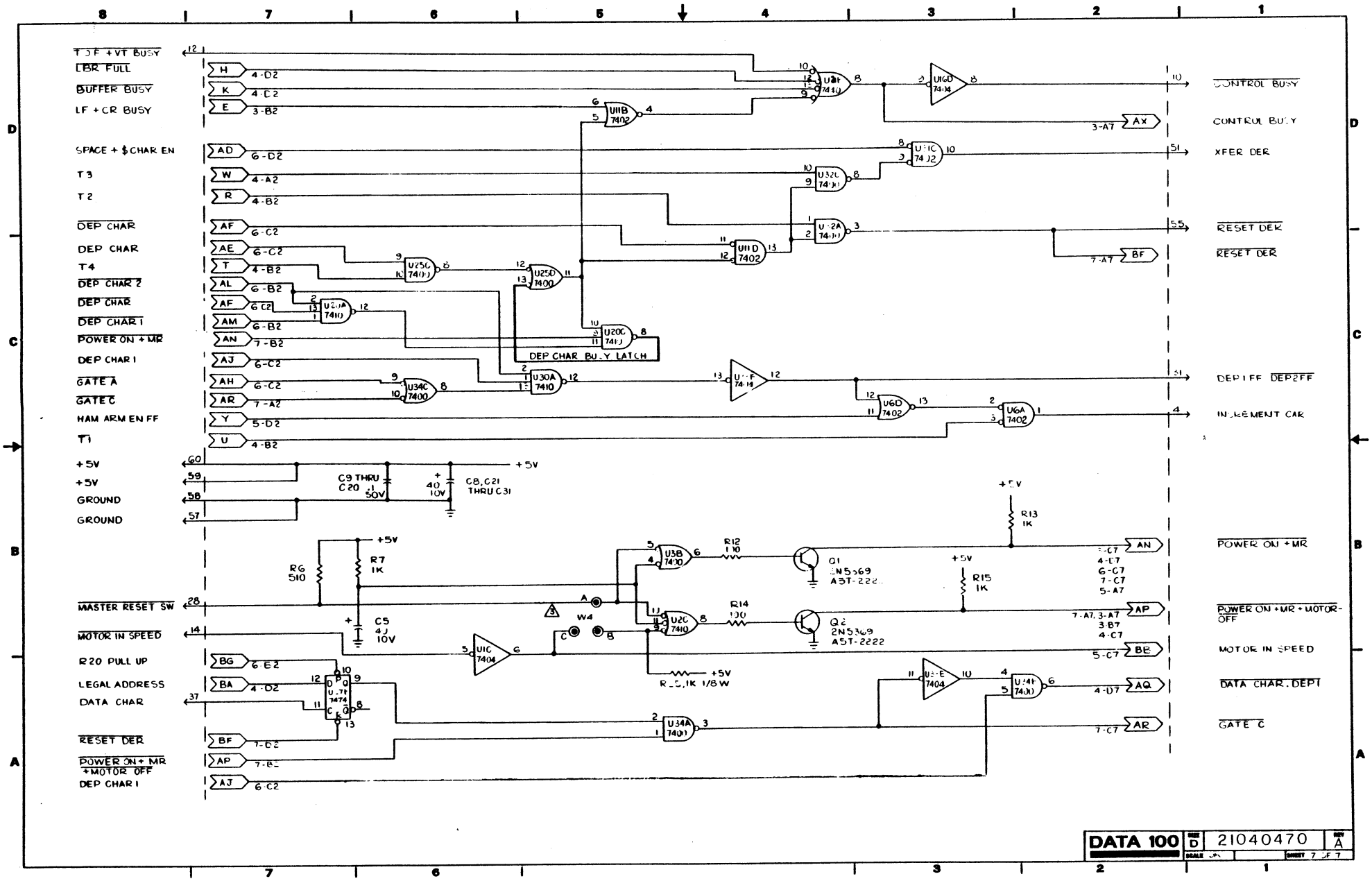
T OF +VT BUSY
LBR FULL
BUFFER BUSY
LF + CR BUSY
SPACE + $ CHAR EN
T3
T2
DEP CHAR
DEP CHAR
T4
DEP CHAR 2
DEP CHAR
DEP CHAR 1
POWER ON + MR
DEP CHAR 1
GATE A
GATE C
HAM ARM EN FF
T1
+5V
+5V
GROUND
GROUND
MASTER RESET SW
MOTOR IN SPEED
R20 PULL UP
LEGAL ADDRESS
DATA CHAR
RESET DER
POWER ON + MR + MOTOR OFF
DEP CHAR 1
CONTROL BUSY
CONTROL BUSY
XFER DER
RESET DER
RESET DER
DEP 1 FF DEP 2 FF
INCREMENT CAR
POWER ON + MR
POWER ON + MR + MOTOR OFF
MOTOR IN SPEED
DATA CHAR. DEP 1
GATE C
DEP CHAR BUSY LATCH
C9 THRU C20 .1 50V
C8, C21 THRU C31 40 10V
R6 510
R7 1K
C5 40 10V
R12 100
R14 100
R13 1K
R15 1K
Q1 2N5369 AST-2222
Q2 2N5369 AST-2222
W4
DATA 100
21040470
A

P.W. BOARD ASSEMBLY, CONTROL BUFFER PHASE II

| PART Nº | DESCRIPTION |
|---|---|
| 66040470 | P.W. Board, Control Buffer |
| 52253003 | Capacitor, 470pf, ±10%, 200WVDC |
| 52251505 | Capacitor, 1800pf, ±10%, 100WVDC |
| 52251545 | Capacitor, 10Kpf, ±10%, 200WVDC |
| 52256000 | Capacitor, .1ufd, ±20%, 50WVDC |
| 52325102 | Capacitor, 1.5ufd, ±10%, 10WVDC |
| 52325055 | Capacitor, 2.2ufd, ±10%, 6WVDC |
| 52325374 | Capacitor, 4.7ufd, ±10%, 35WVDC |
| 52325062 | Capacitor, 6.8ufd, ±10%, 6WVDC |
| 52325065 | Capacitor, 10ufd, ±10%, 10WVDC |
| 52325127 | Capacitor, 40ufd, ±10%, 10WVDC |
| 77221160 | Crystal, 4MHZ |
| 51631003 | Diode 1N914B |
| 51320000 | I.C. 7400 |
| 51320001 | I.C. 7402 |
| 51320002 | I.C. 7404 |
| 51320010 | I.C. 7410 |
| 51320005 | I.C. 7440 |
| 51320016 | I.C. 7451 |
| 51320019 | I.C. 7474 |
| 51320023 | I.C. 9602 |
| 51320007 | I.C. 9601 |
| 54773670 | Pot, 10K |

P.W. BOARD ASSEMBLY, CONTROL BUFFER PHASE II

| PART Nº | DESCRIPTION |
|---|---|
| 54773676 | Pot, 50K |
| 54400261 | Resistor, 100 ohms, 1/4W, ±5% |
| 54400277 | Resistor, 470 ohms, 1/4W, ±5% |
| 54400278 | Resistor, 510 ohms, 1/4W, ±5% |
| 54400279 | Resistor, 560 ohms, 1/4W, ±5% |
| 54400242 | Resistor, 1K, 1/8W, ±5% |
| 54400285 | Resistor, 1K, 1/4W, ±5% |
| 54400287 | Resistor, 1.2K, 1/4W, ±5% |
| 54400474 | Resistor, 5.1K, 1/4W, ±5% |
| 54400477 | Resistor, 6.8K, 1/4W, ±5% |
| 71621100 | Switch |
| 56230005 | Test Jack (White) |
| 56230006 | Test Jack (Black) |
| 51122330 | Transistor, 2N5369 |
| 37203590 | Wire, 24 AWG, White |
| 63611031 | Ejector, Card |

## PROGRAMMING

CONTROL BUFFER/PHASE II

D048-D059

| SELECTION CODE NO. | PROGRAMMING INSTRUCTIONS | | | | | | | | | | | | | | | |
|---|---|---|---|---|---|---|---|---|---|---|---|---|---|---|---|---|
| | W1 | W2 | W3 | W4 | W5 | W6 | W7 | W8 | W9 | | | | | | | |
| D048 | AC | AC | AB | AB | AB | AB | AB | AB | AB | | | | | | | |
| D049 | AB | AB | AB | AB | OP | AB | AB | AB | AB | | | | | | | |
| D050 | AC | AC | AB | AB | OP | AB | AB | AB | AB | | | | | | | |
| D051 | AC | AC | AB | AB | AB | AB | AB | AB | OP | | | | | | | |
| D052 | AC | AC | AC | AB | AB | AB | AB | AB | AB | | | | | | | |
| D053 | AC | AC | AC | OP | AB | AB | AB | AB | AB | | | | | | | |
| D054 | AC | AC | AB | AB | AB | AC | AC | AC | AB | | | | | | | |
| D055 | AB | AB | AB | AB | OP | AC | AC | AC | AB | | | | | | | |
| D056 | AC | AC | AB | AB | OP | AC | AC | AC | AB | | | | | | | |
| D057 | AC | AC | AB | AB | AB | AC | AC | AC | OP | | | | | | | |
| D058 | AC | AC | AC | AB | AB | AC | AC | AC | AB | | | | | | | |
| D059 | AC | AC | AC | AB | OP | AC | AC | AC | AB | | | | | | | |

OP = OPEN

DATA 100 CONFIDENTIAL INFORMATION

| REVISIONS | | | | | |
|---|---|---|---|---|---|
| REV | ECO | DESCRIPTION | ORIG. | DATE | APPD |
| A | | | B.W. | | |

GEOMETRIC CHARACTERISTIC SYMBOLS

| | | Characteristic | Symbol |
|---|---|---|---|
| Form Tolerances | For Single Feature | FLATNESS | ⏥ |
| | | STRAIGHTNESS | — |
| | | ROUNDNESS (CIRCULARITY) | ○ |
| | | CYLINDRICITY | ⌭ |
| | | PROFILE OF ANY LINE | ⌒ |
| | | PROFILE OF ANY SURFACE | ⌓ |
| | For Related Features | PARALLELISM | ∥ |
| | | PERPENDICULARITY (SQUARENESS) | ⊥ |
| | | ANGULARITY | ∠ |
| | | RUNOUT | ↗ |
| Positional Tolerances | | TRUE POSITION | ⊕ |
| | | CONCENTRICITY | ◎ |
| | | SYMMETRY | ⌯ |

| FUNCTION | | PROGRAMMING | | | | | | | | | | | |
|---|---|---|---|---|---|---|---|---|---|---|---|---|---|
| | | S3 1 | S3 2 | S3 3 | S3 4 | S3 5 | S3 6 | S3 7 | S4 1 | S4 2 | S4 3 | S1 | S2 |
| 1. SPEED | A. 60 IPS | OFF | OFF | ON | | | | | | | ON | | |
| | B. 90 IPS | OFF | ON | ON | | | | | | | ON | | |
| | C. 120 IPS | ON | OFF | OFF | | | | | | | OFF | | |
| | D. 135 IPS | ON | OFF | OFF | | | | | | | OFF | | |
| | E. 165 IPS | ON | OFF | OFF | | | | | | | OFF | | |
| 2. PAPER CLAMP DELAY | A. IN | | | | | | | ON | | | | | |
| | B. OUT | | | | | | | OFF | | | | | |
| 3. CHAR PER CLIP | A. SGL | | | | OFF | | | | | | | | |
| | B. DBL | | | | ON | | | | | | | | |
| 4. TOF PRINT | A. IN | | | | | ON | | | | | | | |
| | B. OUT | | | | | OFF | | | | | | | |
| 5. VT PRINT | A. IN | | | | | | ON | | | | | | |
| | B. OUT | | | | | | OFF | | | | | | |
| 6. SKIP OVER FOLD | A. IN | | | | | | | | | ON | | | |
| | B. OUT | | | | | | | | | OFF | | | |
| 7. PPR MOT DAT INHB | A. IN | | | | | | | | OFF | | | | |
| | B. OUT | | | | | | | | ON | | | | |
| 8. LPI | A. 6 | | | | | | | | | | | | OUT |
| | B. 6/8 | | | | | | | | | | | | IN |
| 9. SNG/DBL SPACE SW | A. IN | | | | | | | | | | | IN | |
| | B. OUT | | | | | | | | | | | OUT | |

7. FOR REWORK INSTRUCTIONS SEE SHEET 3.
6. INSTALL ALL JUMPERS USING ITEM 61.
5. PROTECTIVE COVER ITEM 53 TO BE FITTED BEFORE WAVE SOLDERING
4. FOR CONFIGURATION SPECIFICATION SEE 22284010
3. MAX COMPONENT HEIGHT IS .48 IN.
2. FOR MASTER/LOGIC DIAGRAM SEE DRAWING 21040130.
1. FOR ASSEMBLY PROCEDURE SEE DATA 100 SPEC. 21100010.

NOTES:

FOR PARTS LIST SEE SHEETS 4-6

| ITEM | PART NO | QTY | DESCRIPTION |
|---|---|---|---|

NOTES: UNLESS OTHERWISE SPECIFIED
ALL DIMENSIONS IN INCHES
HOLE DIAMETER TOLERANCES
0 THRU .250 ±.003 | .251 THRU .500 ±.005 | .501 & LARGER ±.010
REMOVE ALL BURRS AND SHARP EDGES
DIMENSIONS APPLY AFTER FINISHING, HEAT TREATING, AND PLATING
TOLERANCE UNLESS OTHERWISE SPECIFIED
1 PLACE ± PLACE ANGLES

DATA 100 CORPORATION

| | | |
|---|---|---|
| DRAWN B.WEBSTER | 2-2-78 | |
| CHECKED | 2-2-78 | |
| APPROVED | | |

TITLE: BOARD ASSEMBLY PHASE II P/PA UNPROGRAMMED

SIZE: D | DOCUMENT NUMBER: 81040131 | REV: A

DR | DO NOT SCALE PRINT | SCALE: — | SHEET 1 OF 6

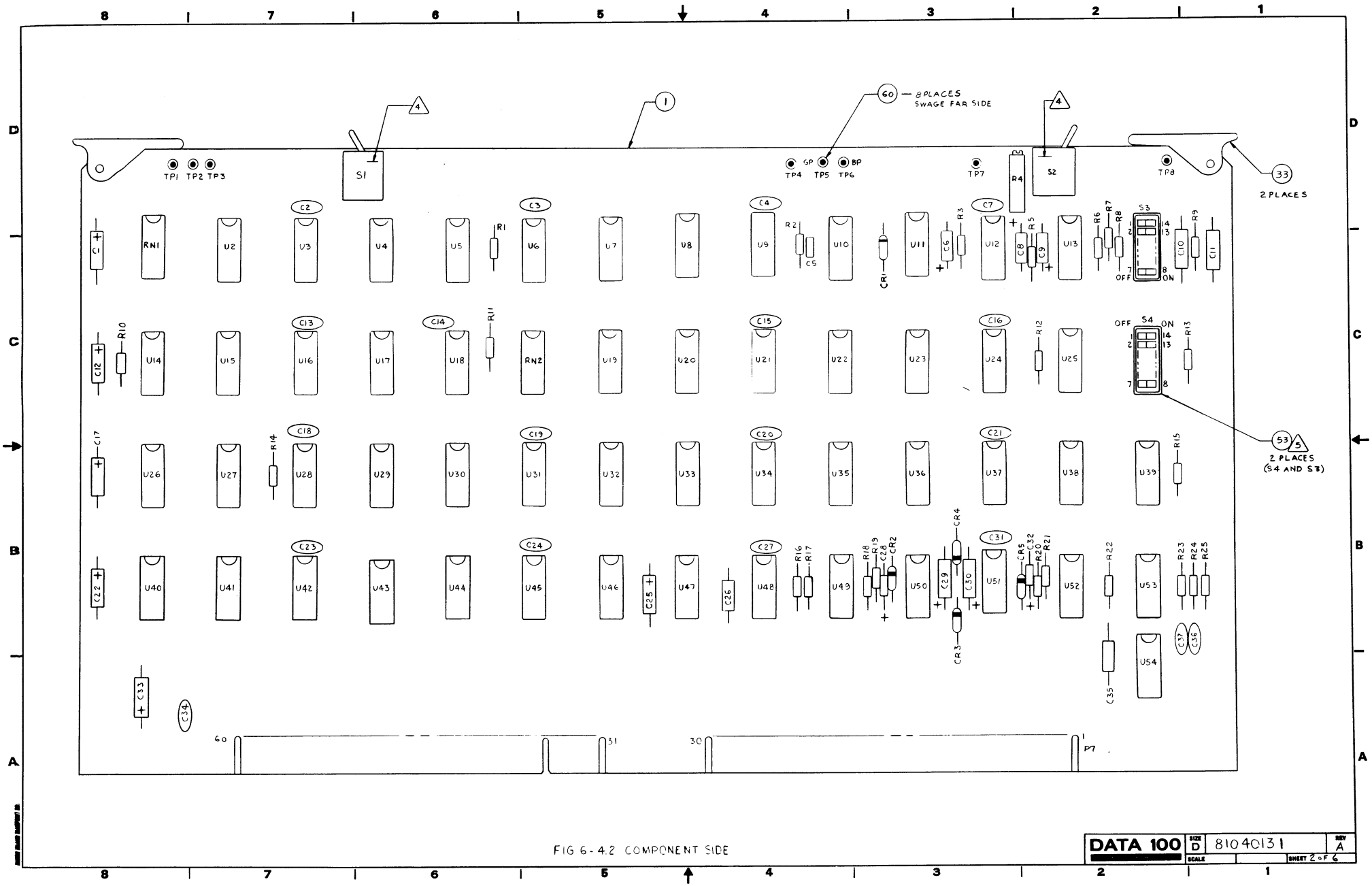


FIG 6-4.2 COMPONENT SIDE

PHASE II PRINT/PAPER ADVANCE BOARD

| PART № | DESCRIPTION |
|---|---|
| 66040131 | P.W. Circuit Board, Phase II P/PA (bare board only) |
| 52253030 | Capacitor, 1500 pf, 100V, 10% |
| 52132120 | Capacitor, .01 uf, 80V |
| 52134009 | Capacitor, .022 uf, 80V, 5% |
| 52134011 | Capacitor, .033 uf, 80V., 5% |
| 52252265 | Capacitor, .05 uf, 12V, 20% |
| 52256000 | Capacitor, .1 uf, 50V, ± 20% |
| 52325222 | Capacitor,.15 uf, 20V, ± 10% |
| 52325041 | Capacitor, .33 uf, 35V, ± 10% |
| 52325047 | Capacitor, 1.0 uf, 6V, 10% |
| 52325374 | Capacitor, 4.7 uf, 35V |
| 52325127 | Capacitor, 40 uf, 10V |
| 51631003 | Diode, 1N914B |
| 51320000 | I.C. SN7400 |
| 51320001 | I.C. SN7402 |
| 51320002 | I.C. SN7404 |
| 51320010 | I.C. SN7410N |
| 51320943 | I.C. 7414J |
| 51320913 | I.C. 7437N |
| 51320005 | I.C. 7440 |
| 51320016 | I.C. 7451N |
| 51320019 | I.C. 7474 |

PHASE II PRINT/PAPER ADVANCE BOARD

| PART Nº | DESCRIPTION |
|---|---|
| 51320020 | I.C. 74121N |
| 51330039 | I.C. 74193 |
| 51330095 | I.C. 74290 |
| 51330009 | I.C. 9322D |
| 51320923 | I.C. 9602 |
| 63611031 | Ejector, Card |
| 54773676 | Potentiometer, 50K |
| 54400285 | Resistor, 1K, 1/4W, ±5% |
| 54400293 | Resistor, 2.2K, 1/4W, ±5% |
| 54400479 | Resistor, 8.2K, 1/4W, ±5% |
| 54531460 | Resistor, 17.4K, 1/8W, ±1% |
| 54400487 | Resistor, 18K, 1/4W, ±5% |
| 54531469 | Resistor, 24.3K, 1/8W, ±1% |
| 54531486 | Resistor, 30.1K, 1/8W, ±1% |
| 54400493 | Resistor, 33K, 1/4W, ±5% |
| 54531498 | Resistor, 48.7K, 1/8W, ±1% |
| 54400499 | Resistor, 56K, 1/4W, ±5% |
| 54820046 | Resistor Network (I.C.), 1K |
| 71621100 | Switch, Toggle, SPST (optional usage---See "Programming" Sheet) |

PHASE II PRINT/PAPER ADVANCE BOARD

| PART Nº | DESCRIPTION |
|---|---|
| 71515204 | Switch, dual in-line package (DIP) |
| 71515214 | Protective Cover, Switch |
| 56231005 | Terminal, (test point) |

PROGRAMMING

PHASE II PRINT/PAPER ADVANCE BOARD

22284010- B100/B171

| | S1 | S2 | S3-1 | S3-2 | S3-3 | S3-4 | S3-5 | S3-6 | S3-7 | S4-1 | S4-2 | S4-3 | S4-4 |
|---|---|---|---|---|---|---|---|---|---|---|---|---|---|
| B100 | OUT | OUT | OFF | ON | ON | OFF | ON | ON | OFF | ON | OFF | ON | N/A |
| B101 | OUT | OUT | OFF | OFF | ON | ON | ON | ON | OFFF | ON | OFF | ON | ↑ |
| B102 | OUT | OUT | ON | OFF | OFF | ON | ON | ON | ON | ON | OFF | OFF | |
| B103 | OUT | OUT | ON | OFF | OFF | ON | ON | ON | OFF | ON | OFF | OFF | |
| B104 | OUT | OUT | ON | OFF | OFF | ON | ON | ON | OFF | ON | OFF | OFF | |
| B105 | OUT | OUT | ON | OFF | OFF | ON | ON | ON | OFF | ON | OFFF | OFF | |
| B106 | OUT | IN | OFF | ON | ON | OFF | ON | ON | OFF | ON | OFF | ON | |
| B107 | OUT | IN | OFF | OFF | ON | ON | ON | ON | OFF | ON | OFF | ON | |
| B108 | OUT | IN | ON | OFF | OFF | ON | ON | ON | ON | ON | OFF | OFF | |
| B109 | OUT | IN | ON | OFF | OFF | ON | ON | ON | OFF | ON | OFF | OFF | |
| B110 | OUT | IN | ON | OFF | OFF | ON | ON | ON | OFF | ON | OFF | OFF | |
| B111 | OUT | IN | ON | OFF | OFF | ON | ON | ON | OFF | ON | OFF | OFF | |
| B112 | OUT | OUT | OFF | ON | ON | OFF | OFF | OFF | OFF | ON | OFF | ON | |
| B113 | OUT | OUT | OFF | OFF | ON | ON | OFF | OFF | OFF | ON | OFF | ON | |
| B114 | OUT | OUT | ON | OFF | OFF | ON | OFF | OFF | ON | ON | OFF | OFF | |
| B115 | OUT | OUT | ON | OFF | OFF | ON | OFF | OFF | OFF | ON | OFF | OFF | |
| B116 | OUT | OUT | ON | OFF | OFF | ON | OFF | OFF | OFF | ON | OFF | OFF | |
| B117 | OUT | OUT | ON | OFF | OFF | ON | OFF | OFF | OFF | ON | OFF | OFF | |
| B118 | OUT | IN | OFF | ON | ON | OFF | OFF | OFF | OFF | ON | OFF | ON | |
| B119 | OUT | IN | OFF | OFF | ON | ON | OFF | OFF | OFF | ON | OFF | ON | |
| B120 | OUT | IN | ON | OFF | OFF | ON | OFF | OFF | ON | ON | OFF | OFF | ↓ |
| B121 | OUT | IN | ON | OFF | OFF | ON | OFF | OFF | OFF | ON | OFF | OFF | N/A |

TO BE USED WITH ASSEMBLY DRAWING 81040131 AND SCHEMATIC 21040130

7711

PROGRAMMING

PHASE II PRINT/PAPER ADVANCE BOARD

22284010-B100/B171

| | S1 | S2 | S3-1 | S3-2 | S3-3 | S3-4 | S3-5 | S3-6 | S3-7 | S4-1 | S4-2 | S4-3 | S4-4/7 |
|---|---|---|---|---|---|---|---|---|---|---|---|---|---|
| B122 | OUT | IN | ON | OFF | OFF | ON | OFF | OFF | OFF | ON | OFF | OFF | N/A |
| B123 | OUT | IN | ON | OFF | OFF | ON | OFF | OFF | OFF | ON | OFF | OFF | |
| B124 | OUT | OUT | OFF | ON | ON | OFF | ON | ON | OFF | OFF | OFF | ON | |
| B125 | OUT | OUT | OFF | OFF | ON | ON | ON | ON | OFF | OFF | OFF | ON | |
| B126 | OUT | OUT | ON | OFF | OFF | ON | ON | ON | ON | OFF | OFF | OFF | |
| B127 | OUT | OUT | ON | OFF | OFF | ON | ON | ON | OFF | OFF | OFF | OFF | |
| B128 | OUT | OUT | ON | OFF | OFF | ON | ON | ON | OFF | OFF | OFF | OFF | |
| B129 | OUT | OUT | ON | OFF | OFF | ON | ON | ON | OFF | OFF | OFF | OFF | |
| B130 | OUT | IN | OFF | ON | ON | OFF | ON | ON | OFF | OFF | OFF | ON | |
| B131 | OUT | IN | OFF | OFF | ON | ON | ON | ON | OFF | OFF | OFF | ON | |
| B132 | OUT | IN | ON | OFF | OFF | ON | ON | ON | ON | OFF | OFF | OFF | |
| B133 | OUT | IN | ON | OFF | OFF | ON | ON | ON | OFF | OFF | OFF | OFF | |
| B134 | OUT | IN | ON | OFF | OFF | ON | ON | ON | OFF | OFF | OFF | OFF | |
| B135 | OUT | IN | ON | OFF | OFF | ON | ON | ON | OFF | OFF | OFF | OFF | |
| B136 | OUT | OUT | OFF | ON | ON | OFF | ON | ON | OFF | ON | ON | ON | |
| B137 | OUT | OUT | OFF | OFF | ON | ON | ON | ON | OFF | ON | ON | ON | |
| B138 | OUT | OUT | ON | OFF | OFF | ON | ON | ON | ON | ON | ON | OFF | |
| B139 | OUT | OUT | ON | OFF | OFF | ON | ON | ON | OFF | ON | ON | OFF | |
| B140 | OUT | OUT | ON | OFF | OFF | ON | ON | ON | OFF | ON | ON | OFF | |
| B141 | OUT | OUT | ON | OFF | OFF | ON | ON | ON | OFF | ON | ON | OFF | |
| B142 | OUT | IN | OFF | ON | ON | OFF | ON | ON | OFF | ON | ON | ON | |
| B143 | OUT | IN | OFF | OFF | ON | ON | ON | ON | OFF | ON | ON | ON | N/A |

TO BE USED WITH ASSEMBLY DRAWING 81040131 AND SCHEMATIC 21040130

PROGRAMMING

PHASE II PRINT/PAPER ADVANCE BOARD

22284010-B100/B171

| | S1 | S2 | S3-1 | S3-2 | S3-3 | S3-4 | S3-5 | S3-6 | S3-7 | S4-1 | S4-2 | S4-3 | S4-4/7 |
|---|---|---|---|---|---|---|---|---|---|---|---|---|---|
| B144 | OUT | IN | ON | OFF | OFF | ON | ON | ON | ON | ON | ON | OFF | N/A |
| B145 | OUT | IN | ON | OFF | OFF | ON | ON | ON | OFF | ON | ON | OFF | ↑ |
| B146 | OUT | IN | ON | OFF | OFF | ON | ON | ON | OFF | ON | ON | OFF | |
| B147 | OUT | IN | ON | OFF | OFF | ON | ON | ON | OFF | ON | ON | OFF | |
| B148 | IN | OUT | OFF | ON | ON | OFF | ON | ON | OFF | ON | OFF | ON | |
| B149 | IN | OUT | OFF | OFF | ON | ON | ON | ON | OFF | ON | OFF | ON | |
| B150 | IN | OUT | ON | OFF | OFF | ON | ON | ON | ON | ON | OFF | OFF | |
| B151 | IN | OUT | ON | OFF | OFF | ON | ON | ON | OFF | ON | OFF | OFF | |
| B152 | IN | OUT | ON | OFF | OFF | ON | ON | ON | OFF | ON | OFF | OFF | |
| B153 | IN | OUT | ON | OFF | OFF | ON | ON | ON | OFF | ON | OFF | OFF | |
| B154 | IN | IN | OFF | ON | ON | OFF | ON | ON | OFF | ON | OFF | OFF | |
| B155 | IN | IN | OFF | OFF | ON | ON | ON | ON | OFF | ON | OFF | ON | |
| B156 | IN | IN | ON | OFF | OFF | ON | ON | ON | ON | ON | OFF | OFF | |
| B157 | IN | IN | ON | OFF | OFF | ON | ON | ON | OFF | ON | OFF | OFF | |
| B158 | IN | IN | ON | OFF | OFF | ON | ON | ON | OFF | ON | OFF | OFF | |
| B159 | IN | IN | ON | OFF | OFF | ON | ON | ON | OFF | ON | OFF | OFF | |
| B160 | OUT | OUT | OFF | ON | ON | OFF | OFF | ON | OFF | ON | OFF | ON | |
| B161 | OUT | OUT | OFF | OFF | ON | ON | OFF | ON | OFF | ON | OFF | ON | |
| B162 | OUT | OUT | ON | OFF | OFF | ON | OFF | ON | ON | ON | OFF | OFF | |
| B163 | OUT | OUT | ON | OFF | OFF | ON | OFF | ON | OFF | ON | OFF | OFF | |
| B164 | OUT | OUT | ON | OFF | OFF | ON | OFF | ON | OFF | ON | OFF | OFF | ↓ |
| B165 | OUT | OUT | ON | OFF | OFF | ON | OFF | ON | OFF | ON | OFF | OFF | N/A |

TO BE USED WITH ASSEMBLY DRAWING 81040131 AND SCHEMATIC 21040130

PROGRAMMING

PHASE II PRINT/PAPER ADVANCE BOARD

22284010-B100/B171

| | S1 | S2 | S3-1 | S3-2 | S3-3 | S3-4 | S3-5 | S3-6 | S3-7 | S4-1 | S4-2 | S4-3 | S4-4/7 |
|---|---|---|---|---|---|---|---|---|---|---|---|---|---|
| B166 | OUT | IN | OFF | ON | ON | OFF | OFF | ON | OFF | ON | OFF | ON | N/A |
| B167 | OUT | IN | OFF | OFF | ON | ON | OFF | ON | OFF | ON | OFF | ON | |
| B168 | OUT | IN | ON | OFF | OFF | ON | OFF | ON | ON | ON | OFF | OFF | |
| B169 | OUT | IN | ON | OFF | OFF | ON | OFF | ON | OFF | ON | OFF | OFF | |
| B170 | OUT | IN | ON | OFF | OFF | ON | OFF | ON | OFF | ON | OFF | OFF | |
| B171 | OUT | IN | ON | OFF | OFF | ON | OFF | ON | OFF | ON | OFF | OFF | |
| | | | | | | | | | | | | | |
| | | | | | | | | | | | | | |
| | | | | | | | | | | | | | |
| | | | | | | | | | | | | | |
| | | | | | | | | | | | | | |
| | | | | | | | | | | | | | |
| | | | | | | | | | | | | | |
| | | | | | | | | | | | | | |
| | | | | | | | | | | | | | |
| | | | | | | | | | | | | | |
| | | | | | | | | | | | | | |
| | | | | | | | | | | | | | |
| | | | | | | | | | | | | | |
| | | | | | | | | | | | | | |
| | | | | | | | | | | | | | |
| | | | | | | | | | | | | | N/A |

TO BE USED WITH ASSEMBLY DRAWING 81040130 AND SCHEMATIC 21040130

| REVISIONS | | | |
|---|---|---|---|
| REV | | DESCRIPTION | |
| A | | HISTORY | 8-18-76 |
| B | Θ | DRN DROC 3556 | DC 3777 |

SHEET NUMBERS

| 1 | 2 | 3 | 4 | 5 | 6 | 7 | 8 | 9 | 10 | 11 | 12 | 13 | 14 | 15 | 16 | 17 | 18 | 19 | 20 | 21 | 22 | 23 | 24 | 25 | 26 | 27 | 28 | 29 | 30 | 31 | 32 | 33 | 34 | 35 | 36 | 37 | 38 | 39 | 40 | 41 | 42 | 43 | 44 | 45 | 46 | 47 | 48 | 49 | 50 |
|---|---|---|---|---|---|---|---|---|---|---|---|---|---|---|---|---|---|---|---|---|---|---|---|---|---|---|---|---|---|---|---|---|---|---|---|---|---|---|---|---|---|---|---|---|---|---|---|---|---|
| B | B | B | B | B | B | | | | | | | | | | | | | | | | | | | | | | | | | | | | | | | | | | | | | | | | | | | | |

4. INSTALL S2 WITH 6/8 LPI CONFIGURATION, INSTALL S1 WITH SINGLE/DOUBLE SPACE SWITCH OPTION.

3. FOR CONFIGURATION SPECIFIATION SEE 22284010

2. EXAMPLE OF ZONE AND TAG LINES:

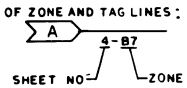


1. UNLESS OTHERWISE SPECIFIED:
   ALL RESISTORS VALUES ARE IN OHMS; ±5%; 1/4 W
   ALL CAPACITORS ARE IN MICROFARDS

NOTES:

DATA 100 CORPORATION

BOARD SCHEMATIC
PHASE II P/PA

D 21040130

SR 1 6

| I.C. | REF DES | SPARE GATES |
|---|---|---|
| 7474 | U54 | B8-13 |
| 7404 | U21 | D8,9 |
| | U42 | A1,2;C5,6;E10,11;F12,13 |
| 7440 | U27 | B8-13 |
| | | |
| 7451 | U4 | B8-13 |
| 9602 | U9 | A1-6 |
| 9602 | U11 | B8-13 |

| POWER DISTRIBUTION FOR I.C.'S | | |
|---|---|---|
| REFERENCE DESIGNATIONS | +5V | GND |
| U2-8,10,12-42,44-49,52,53,54 | 14 | 7 |
| U9,11,43,50,51 | 16 | 8 |

| HIGHEST REF DES | REF DES NOT USED |
|---|---|
| C37 | — |
| R25 | — |
| U54 | U1 |
| S4 | — |
| RN2 | — |
| CR5 | — |
| W | — |

| FUNCTION | | PROGRAMMING | | | | | | | | | | | |
|---|---|---|---|---|---|---|---|---|---|---|---|---|---|
| | | S3 1 | S3 2 | S3 3 | S3 4 | S3 5 | S3 6 | S3 7 | S4 1 | S4 2 | S4 3 | S1 | S2 |
| 1. SPEED | A 60 IPS | OFF | OFF | ON | | | | | | | ON | | |
| | B 90 IPS | OFF | ON | ON | | | | | | | ON | | |
| | C 120 IPS | ON | OFF | OFF | | | | | | | OFF | | |
| | D 135 IPS | ON | OFF | OFF | | | | | | | OFF | | |
| | E 165 IPS | ON | OFF | OFF | | | | | | | OFF | | |
| 2. PAPER CLAMP DELAY | A IN | | | | | | | ON | | | | | |
| | B OUT | | | | | | | OFF | | | | | |
| 3 CHAR PER CLIP | A SGL | | | | OFF | | | | | | | | |
| | B DBL | | | | ON | | | | | | | | |
| 4 TOF PRINT | A IN | | | | | ON | | | | | | | |
| | B OUT | | | | | OFF | | | | | | | |
| 5 VT PRINT | A IN | | | | | | ON | | | | | | |
| | B OUT | | | | | | OFF | | | | | | |
| 6 SKIP OVER FOLD | A IN | | | | | | | | | ON | | | |
| | B OUT | | | | | | | | | OFF | | | |
| 7 PPR MOT DAT INHIB | A IN | | | | | | | | OFF | | | | |
| | B OUT | | | | | | | | ON | | | | |
| 8 LPI | A 6 | | | | | | | | | | | | OUT |
| | B 6/8 | | | | | | | | | | | | IN |
| 9 SNG/DBL SPACE SW | A IN | | | | | | | | | | | IN | |
| | B OUT | | | | | | | | | | | OUT | |

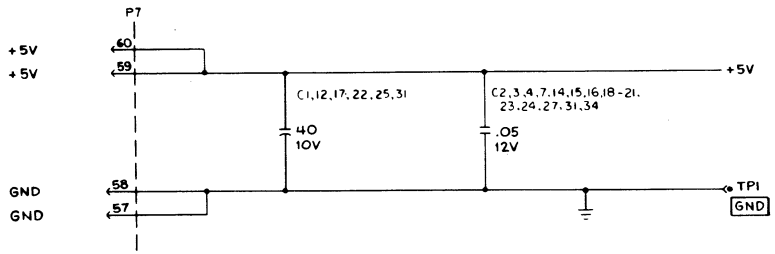


DATA 100 CORPORATION | SIZE D | 21040130 | REV B | SCALE | SHEET 2 OF 6

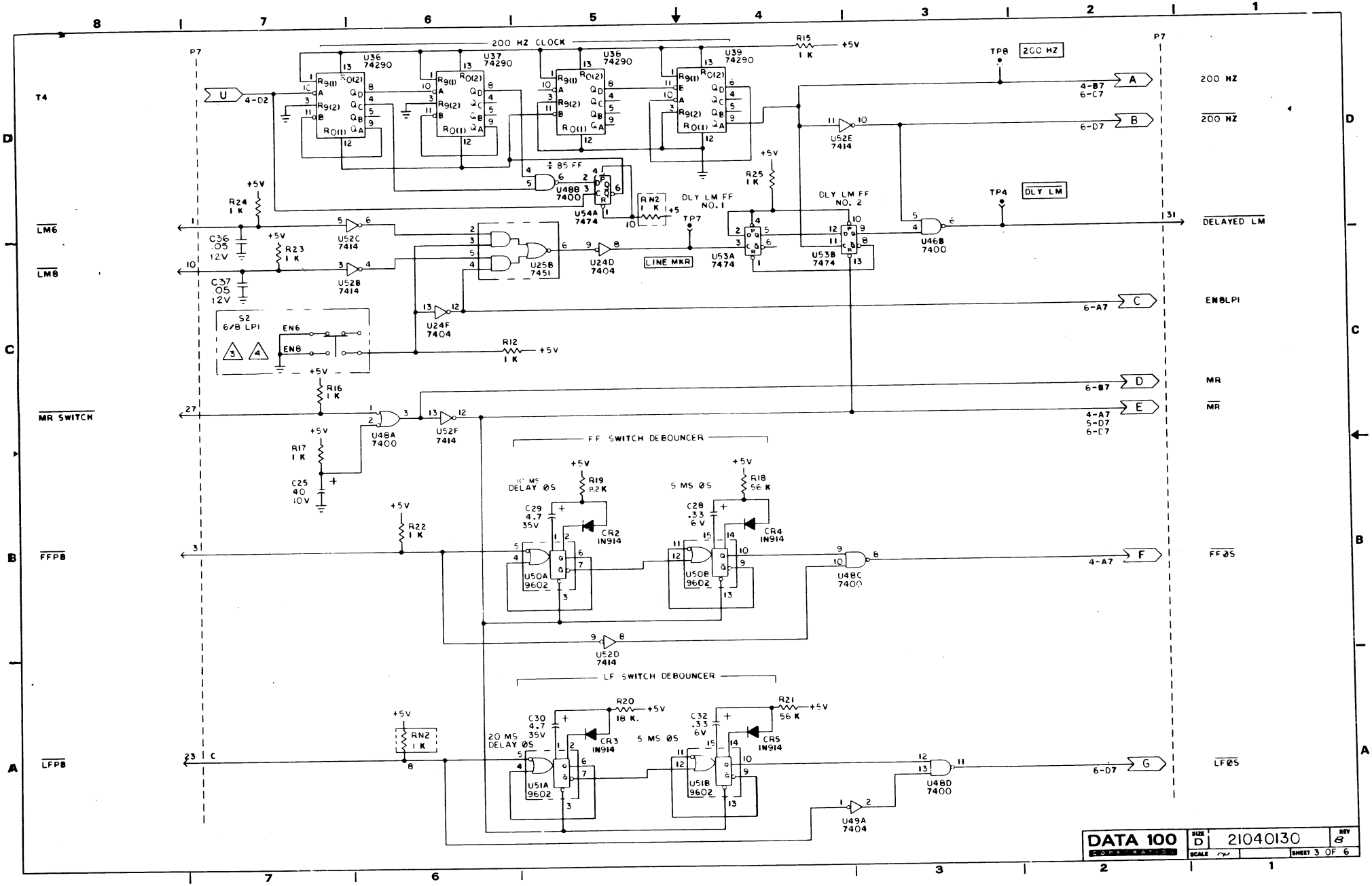
200 HZ CLOCK
U36 74290
U37 74290
U39 74290
R15 1 K
+5V
TP8
200 HZ
A
200 HZ
B
200 HZ
U52E 7414
÷ 85 FF
U48B 7400
U54A 7474
RN2 1 K
DLY LM FF NO. 1
DLY LM FF NO. 2
R25 1 K
TP4
DLY LM
U46B 7400
DELAYED LM
TP7
LINE MKR
U53A 7474
U53B 7474
R24 1 K
LM6
C36 .05 12V
U52C 7414
R23 1 K
LM8
C37 .05 12V
U52B 7414
U25B 7451
U24D 7404
U24F 7404
S2 6/8 LPI
EN6
EN8
R12 1 K
C
EN8LPI
R16 1 K
MR SWITCH
U48A 7400
U52F 7414
D
MR
E
MR
R17 1 K
C25 40 10V
FF SWITCH DEBOUNCER
10 MS DELAY ØS
R19 8.2 K
C29 4.7 35V
CR2 IN914
U50A 9602
5 MS ØS
R18 56 K
C28 .33 6V
CR4 IN914
U50B 9602
R22 1 K
FFPB
F
FFØS
U48C 7400
U52D 7414
LF SWITCH DEBOUNCER
R20 18 K.
C30 4.7 35V
20 MS DELAY ØS
CR3 IN914
U51A 9602
R21 56 K
C32 .33 6V
5 MS ØS
CR5 IN914
U51B 9602
RN2 1 K
LFPB
G
LFØS
U48D 7400
U49A 7404
DATA 100 CORPORATION
SIZE D
21040130
REV 8
SCALE
SHEET 3 OF 6

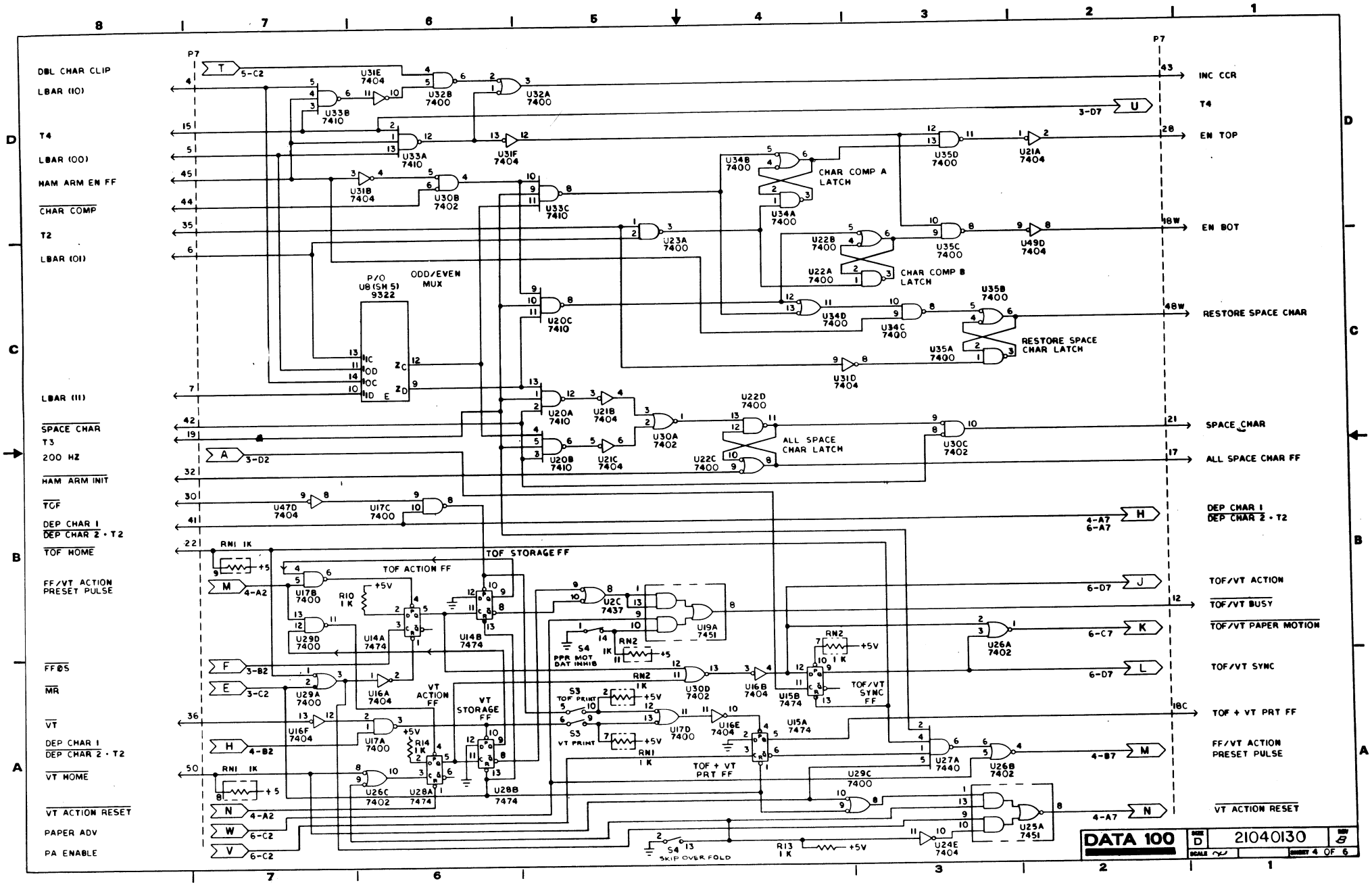
DBL CHAR CLIP
LBAR (10)
T4
LBAR (00)
HAM ARM EN FF
CHAR COMP
T2
LBAR (01)
LBAR (11)
SPACE CHAR
T3
200 HZ
HAM ARM INIT
TOF
DEP CHAR 1
DEP CHAR 2 · T2
TOF HOME
FF/VT ACTION PRESET PULSE
FFØS
MR
VT
DEP CHAR 1
DEP CHAR 2 · T2
VT HOME
VT ACTION RESET
PAPER ADV
PA ENABLE
INC CCR
T4
EN TOP
EN BOT
RESTORE SPACE CHAR
SPACE CHAR
ALL SPACE CHAR FF
DEP CHAR 1
DEP CHAR 2 · T2
TOF/VT ACTION
TOF/VT BUSY
TOF/VT PAPER MOTION
TOF/VT SYNC
TOF + VT PRT FF
FF/VT ACTION PRESET PULSE
VT ACTION RESET
CHAR COMP A LATCH
CHAR COMP B LATCH
RESTORE SPACE CHAR LATCH
ALL SPACE CHAR LATCH
ODD/EVEN MUX
P/O U8 (SH 5) 9322
TOF ACTION FF
TOF STORAGE FF
VT ACTION FF
VT STORAGE FF
TOF/VT SYNC FF
TOF + VT PRT FF
PPR MOT DAT INHIB
TOF PRINT
VT PRINT
SKIP OVER FOLD
DATA 100
21040130
SHEET 4 OF 6

TP5
TP6

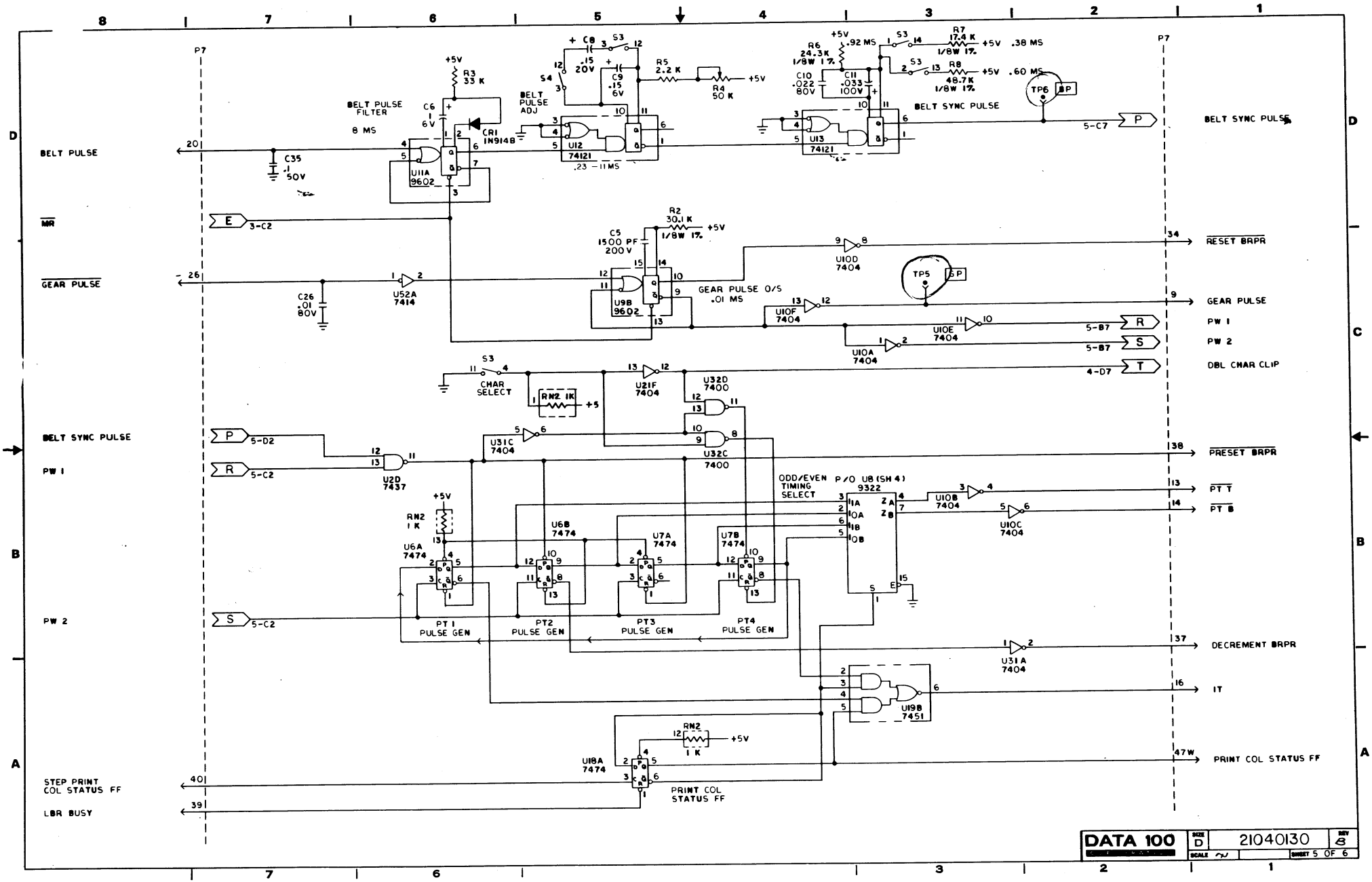
BELT PULSE
MR
GEAR PULSE
BELT SYNC PULSE
PW 1
PW 2
STEP PRINT COL STATUS FF
LBR BUSY
BELT PULSE FILTER
8 MS
U11A 9602
U12 74121
.23 – 11 MS
U13 74121
BELT PULSE ADJ
BELT SYNC PULSE
U9B 9602
GEAR PULSE 0/S .01 MS
U52A 7414
U10D 7404
U10F 7404
U10E 7404
U10A 7404
CHAR SELECT
U21F 7404
U32D 7400
U32C 7400
U31C 7404
U2D 7437
U6A 7474
U6B 7474
U7A 7474
U7B 7474
PT 1 PULSE GEN
PT2 PULSE GEN
PT3 PULSE GEN
PT4 PULSE GEN
ODD/EVEN TIMING SELECT
P/O U8 (SH 4) 9322
U10B 7404
U10C 7404
U31A 7404
U19B 7451
U18A 7474
PRINT COL STATUS FF
RESET BRPR
GEAR PULSE
PW 1
PW 2
DBL CHAR CLIP
PRESET BRPR
PT T
PT B
DECREMENT BRPR
IT
PRINT COL STATUS FF
DATA 100
21040130
SHEET 5 OF 6

TP3
TP2

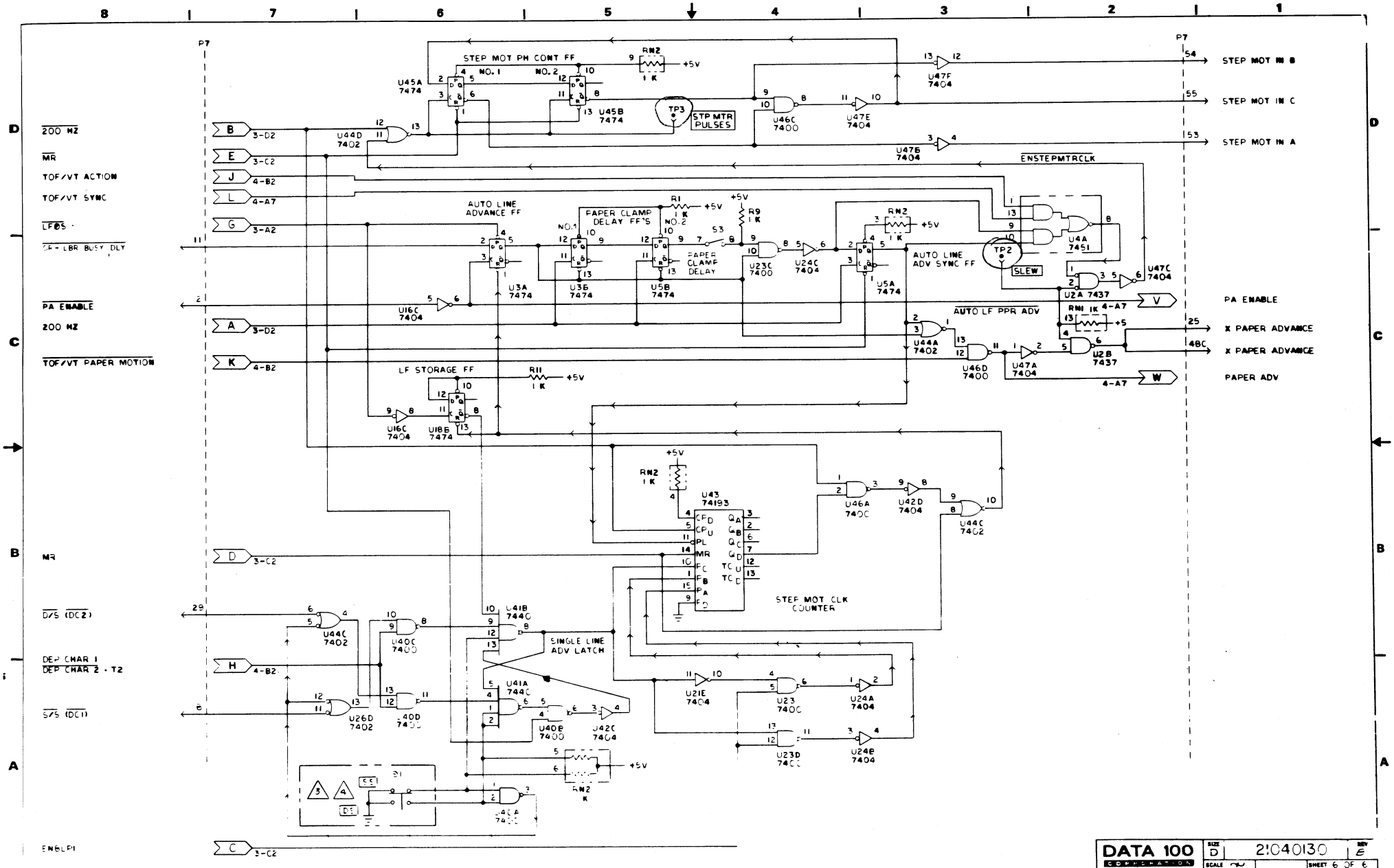
STEP MOT PH CONT FF
NO. 1
NO. 2
U45A 7474
U45B 7474
RN2 1 K
+5V
TP3
STP MTR PULSES
U46C 7400
U47E 7404
U47F 7404
U47B 7404
STEP MOT IN B
STEP MOT IN C
STEP MOT IN A
ENSTEPMTRCLK
200 HZ
MR
TOF/VT ACTION
TOF/VT SYNC
LF⌀S
PA ENABLE
200 HZ
TOF/VT PAPER MOTION
MR
D/S (DC2)
DEP CHAR 1
DEP CHAR 2 - T2
S/S (DC1)
ENBLPI
U44D 7402
U16C 7404
AUTO LINE ADVANCE FF
U3A 7474
PAPER CLAMP DELAY FF'S
U3B 7474
U5B 7474
R1 1 K
R9 1 K
S3
PAPER CLAMP DELAY
U23C 7400
U24C 7404
U5A 7474
AUTO LINE ADV SYNC FF
TP2
SLEW
U4A 7451
U47C 7404
U2A 7437
RN1 1K
U2B 7437
AUTO LF PPR ADV
U44A 7402
U46D 7400
U47A 7404
PA ENABLE
X PAPER ADVANCE
X PAPER ADVANCE
PAPER ADV
LF STORAGE FF
R11 1 K
U16C 7404
U18B 7474
U43 74193
STEP MOT CLK COUNTER
U46A 7400
U42D 7404
U44C 7402
U41B 7440
SINGLE LINE ADV LATCH
U41A 7440
U40B 7400
U42C 7404
U21E 7404
U23 7400
U24A 7404
U23D 7400
U24B 7404
U44C 7402
U40C 7400
U26D 7402
U40D 7400
U40A 7400
RN2 K
P1
DATA 100 CORPORATION
SIZE D
2:040130
REV E
SCALE
SHEET 6 OF 6

DATA 100 CONFIDENTIAL INFORMATION

| REVISIONS | | | | |
|---|---|---|---|---|
| ECO | SYM | DESCRIPTION | DATE | APPR |
| | 01 | DRN DR 00186 | | |
| | A | DRN DR 00218 | 5/12/77 | |

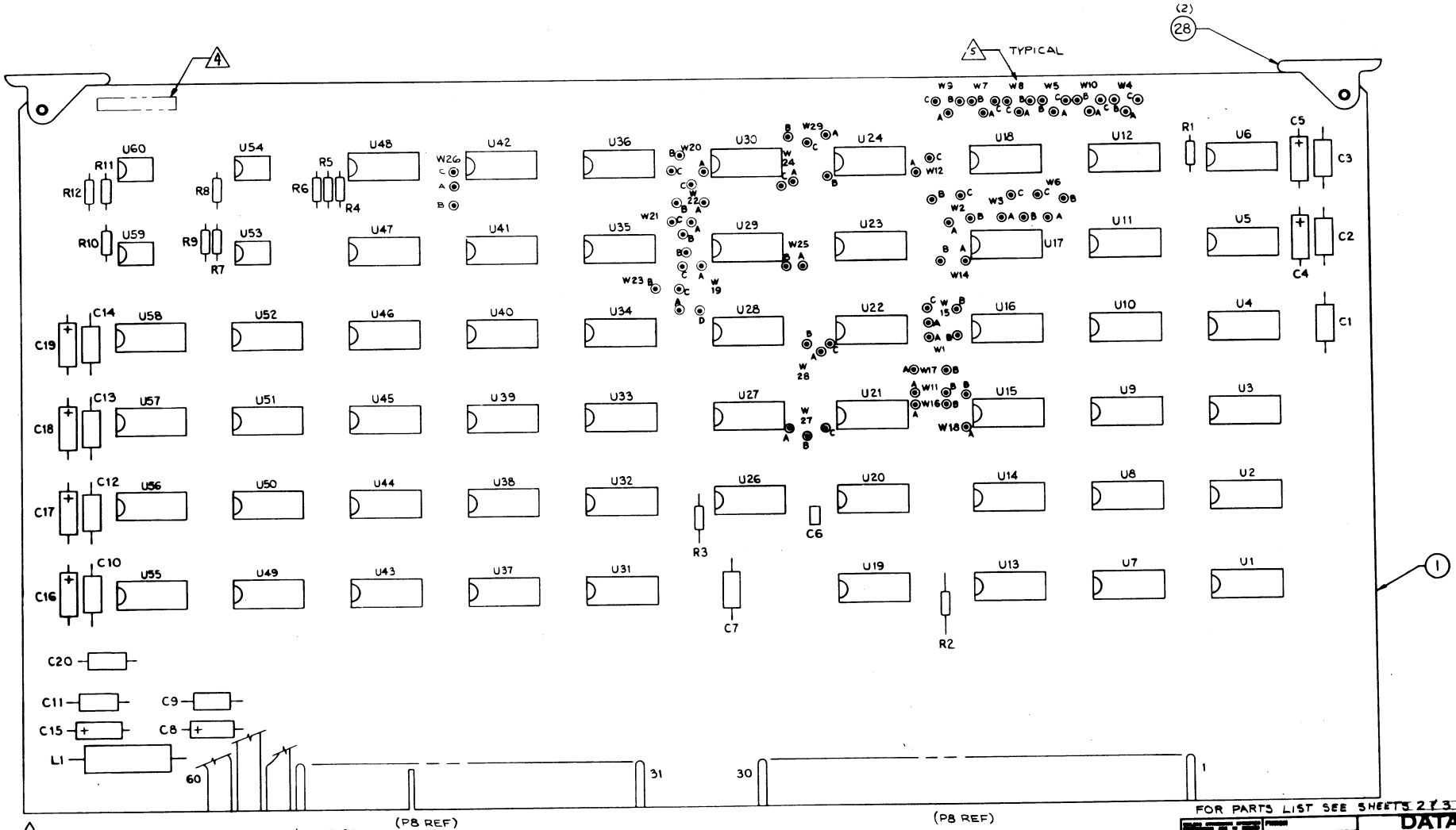


FOR PARTS LIST SEE SHEETS 2 & 3

4 RUBBER STAMP UNPROGRAMMED BOARD P/N AND REV LEVEL APPROXIMATELY AS SHOWN

3. MAX. COMPONENT HEIGHT IS .300 IN. HIGH.

2. FOR MASTER LOGIC/SCHEMATIC, SEE DRAWING 21040320

1. FOR ASSEMBLY PROCEDURE, SEE DATA 100 SPEC 21100010.

NOTES:

5 FOR CONFIGURATION SPECIFICATION, SEE 22284010.

DATA 100

P.W. BOARD ASSEMBLY REGISTER

SIZE D 81040320 REV A

SCALE 2:1 DR

P.W. BOARD ASSY. REGISTER

| PART Nº | DESCRIPTION |
|---|---|
| 66040320 | P.W. Board, Register |
| 52251515 | Capacitor, 100 pf, +10%, 200 WVDC |
| 52256000 | Capacitor,.1ufd, +20%, 50 WVDC |
| 52325127 | Capacitor, 40 ufd, +10%, 10 WVDC |
| 53358000 | Choke, 27 MH |
| 63611031 | Ejector, Card |
| 51320000 | I.C., 7400N |
| 51320001 | I.C., 7402N |
| 51320002 | I.C., 7404N |
| 51320010 | I.C., 7410N |
| 51320011 | I.C., 7430N |
| 51320005 | I.C., 7440N |
| 51320016 | I.C., 7451N |
| 51320019 | I.C., 7474N |
| 51510010 | I.C., 2522 Shift Reg. Dual |
| 51320018 | I.C., 7486 |
| 54400285 | Resistor, 1K, 1/4W, +5% |
| 54400481 | Resistor, 10K, 1/4W, +5% |

PROGRAMMING

REGISTER PRINTED CIRCUIT BOARD ASSEMBLY

22284010-G20/339

| REGISTER BOARD PROGRAMMED PART NO'S 22284010- | PROGRAMMING POINTS | | | | | | | | | | | | | | | | | | | | | | | | | | | | |
|---|---|---|---|---|---|---|---|---|---|---|---|---|---|---|---|---|---|---|---|---|---|---|---|---|---|---|---|---|---|
| | W1 | W2 | W3 | W4 | W5 | W6 | W7 | W8 | W9 | W10 | W11 | W12 | W13 | W14 | W15 | W16 | W17 | W18 | W19 | W20 | W21 | W22 | W23 | W24 | W25 | W26 | W27 | W28 | W29 |
| G20 | OPN | AC | AC | AC | AB | AC | AC | AC | AB | W10-A W4-B | OPN | AB | | OPN | AB | AB | AB | AB | AB | AB | BC | BC | AC | AC | AB | OPN | AB | AB | AB |
| G21 | OPN | AC | AC | AC | AB | AC | AC | AC | AC | W10-A W4-B | W11-A W15-C | AC | | OPN | AB | AB | AB | AB | AC | AC | BC | AB | AD | AB | AB | AB | BC | AB | AC |
| G22 | AB | AB | AB | AB | AC | AC | AC | AC | AC | AB | OPN | AB | | AB | OPN | AB | OPN | OPN | AC | BC | BC | BC | AC | AC | AB | OPN | AB | AB | AB |
| G23 | AB | AB | AB | AC | AC | AC | AC | AC | AC | W10-A W4-B | W11-A W15-C | AC | | AB | OPN | AB | OPN | OPN | AC | AC | BC | AB | AC | AB | AB | AB | BC | AB | AC |
| G24 | | | | | | | | | | | | | | | | | | | | | | | | | | | | | |
| G25 | | | | | | | | | | | | | | | | | | | | | | | | | | | | | |
| G26 | | | | | | | | | | | | | | | | | | | | | | | | | | | | | |
| G27 | | | | | | | | | | | | | | | | | | | | | | | | | | | | | |
| G28 | | | | | | | | | | | | | | | | | | | | | | | | | | | | | |
| G29 | | | | | | | | | | | | | | | | | | | | | | | | | | | | | |
| G30 | | | | | | | | | | | | | | | | | | | | | | | | | | | | | |
| G31 | | | | | | | | | | | | | | | | | | | | | | | | | | | | | |
| G32 | | | | | | | | | | | | | | | | | | | | | | | | | | | | | |
| G33 | AB | AB | AB | AB | AC | AC | AC | AC | AC | AB | OPN | AB | | AB | OPN | AB | OPN | OPN | AB | AC | BC | BC | AC | AC | AB | OPN | AB | AB | AB |
| G34 | AB | AB | AB | AC | AC | AC | AC | AC | AC | W10-A W4-B | W11-A W15-C | AC | | AB | OPN | AB | OPN | OPN | AC | AC | BC | AB | AD | AB | AB | AB | BC | AB | AC |
| G35 | AB | AB | AB | AC | AC | AC | AC | AB | AB | W10-A W4-B | W11-A W15-C | AB | | AB | OPN | AB | OPN | OPN | AB | AC | BC | AB | AB | AB | AB | AB | BC | AB | AC |
| G36 | AB | AB | AB | AC | AC | AC | AC | AB | AB | W10-A W4-B | W11-A W15-C | AB | | AB | OPN | AB | OPN | OPN | AB | AC | BC | AB | AB | AB | AB | AB | BC | AB | AC |
| G37 | OPN | AC | AB | AC | AB | AC | AC | AB | AB | W10-A W4-B | W11-A W15-C | AB | | OPN | AB | AB | AB | OPN | AB | AC | BC | AB | AB | AB | AB | AB | BC | AB | AC |
| G38 | OPN | AC | AC | AC | AB | AC | AC | AB | AB | W10-A W4-B | W11-A W15-C | AB | | OPN | AB | AB | AB | AB | AB | AC | BC | AB | AB | AB | AB | AB | BC | AB | AC |
| G39 | AB | AB | AB | AB | AC | AC | AC | AC | AC | AB | OPN | AB | | AB | OPN | AB | OPN | OPN | AB | AC | BC | BC | AC | AC | AB | OPN | AB | AB | AB |

NOTE: PROGRAMMED PART NO'S: G20/G38 UTILIZE ASSEMBLY DRAWING 81040320 AND SCHEMATIC DIAGRAM 21040320

Rev. A

DATA 100 CONFIDENTIAL INFORMATION
This drawing is the Confidential Proprietary Property of DATA 100 and includes trade secret information. It is to be used only for a purpose which has not been authorized by DATA 100. It is prohibited and is not to be used for any purpose or any other information or trade secrets without the express written consent of a representative of DATA 100.

REVISIONS

| REV | ECO | DESCRIPTION | DRFT | DATE | CHK'D |
|---|---|---|---|---|---|
| 01 | ~~0~~ | DRN DR 00196 | [illegible] | | |
| A | ~~0~~ | DRN DR 00218 | JEB | 2/23/77 | [illegible] |

SHEET NUMBERS

REVISION LEVEL

| 1 | 2 | 3 | 4 | 5 | 6 | 7 | 8 | 9 | 10 | 11 | 12 | 13 | 14 | 15 | 16 | 17 | 18 | 19 | 20 | 21 | 22 | 23 | 24 | 25 | 26 | 27 | 28 | 29 | 30 | 31 | 32 | 33 | 34 | 35 | 36 | 37 | 38 | 39 | 40 | 41 | 42 | 43 | 44 | 45 | 46 | 47 | 48 | 49 | 50 |
|---|---|---|---|---|---|---|---|---|---|---|---|---|---|---|---|---|---|---|---|---|---|---|---|---|---|---|---|---|---|---|---|---|---|---|---|---|---|---|---|---|---|---|---|---|---|---|---|---|---|
| A | A | A | A | A | A | A | A | A | A | A | | | | | | | | | | | | | | | | | | | | | | | | | | | | | | | | | | | | | | | | |

4. CONNECTOR PINS ARE INDICATED AS FOLLOWS:
   59C - COMPONENT SIDE OF BOARD.
   59W - WIRING SIDE OF BOARD.

3. FOR CONFIGURATION SPECIFICATION, SEE 22284010.

2. EXAMPLE OF ZONE AND TAG LINES;

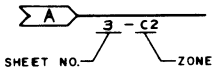


1. UNLESS OTHERWISE SPECIFIED;
   ALL RESISTORS ARE IN OHMS; ±5%; 1/4W
   ALL CAPACITORS ARE IN MICROFARADS

NOTES:

| | | | |
|---|---|---|---|
| DATA 100 | TITLE: BOARD SCHEMATIC REGISTER | | |
| ORIGINATOR [illegible] | 2/10/77 | | |
| APPROVAL [illegible] | 2/18/77 | | |
| APPROVAL [illegible] | 2/-/77 | SIZE D | DRAWING NUMBER 21040320 — REV. A |
| [illegible] | 2/9/77 | | |
| [illegible] | 2/15/77 | DR | SHEET 1 OF 11 — PAGE |

610036-E

| I.C. | REF DES | SPARE GATES |
|---|---|---|
| 7400 | U50 | D11, 12, 13 |
| 7402 | U7 | B4, 5, 6 |
| | U13 | B4, 5, 6 |
| | U17 | D11, 12, 13 |
| | U32 | D11, 12, 13 |
| | U52 | C8, 9, 10 |
| 7404 | U2 | C5G., E10, 11, F12, 13 |
| | U39 | F12, 13 |
| | U47 | A1, 2., C5, G., D8, 9 |
| | U48 | C5, 6 |
| 7410 | U9 | A1, 2, 12, 13 |
| 7451 | U30 | A1, 8, 9, 10, 11, 12, 13 |
| 7474 | U16 | A1-6 |
| 7474 | U33 | A1-6 |
| 7486 | U41 | C8, 9, 10 |
| 7474 | U26 | B8-13 |

| POWER DISTRIBUTION FOR IC'S | | |
|---|---|---|
| REF DESIGNATION | +5 | GND |
| U1-24, U26-52, U55-58 | 14 | 7 |
| U53, 54, 59, 60 | 8 | 4 |

| HIGHEST REF DES. | REF DES. NOT USED |
|---|---|
| C20 | |
| L1 | |
| R12 | |
| U60 | U25, |
| BB | AP |

CONFIGURATION TABLE 3

| | FUNCTION | DESIGNATION | SINGLE SLUG CLIP | | | DOUBLE SLUG CLIP | | |
|---|---|---|---|---|---|---|---|---|
| | | | 48 CHAR SET | 64 CHAR SET | 96 CHAR SET | 48 CHAR SET | 64 CHAR SET | 96 CHAR SET |
| | BRPR BIT4 PRESET | W1 | OPEN | OPEN | OPEN | A-B | A-B | A-B |
| | BRPR BIT1 PRESET | W2 | A-C | A-C | A-C | A-B | A-B | A-B |
| 60 HZ ONLY | BRPR BIT0 PRESET | W3 | A-B | A-B | A-B | A-B | A-B | A-B |
| | BRPR BIT6 RESET | W4 | A-C | A-C | A-C | A-C | A-B | A-C |
| | BRPR BIT4 RESET | W5 | A-B | A-B | A-B | A-C | A-C | A-C |
| | BRPR BIT2 PRESET | W6 | A-C | A-C | A-C | A-C | A-C | A-C |
| | BRPR BIT5 RESET | W7 | A-C | A-C | A-C | A-C | A-C | A-C |
| | BRPR BIT4 RESET | W8 | A-B | A-C | A-C | A-B | A-C | A-C |
| | BRPR BIT5 RESET | W9 | A-B | A-B | A-C | A-B | A-C | A-C |
| | BRPR BIT6 RESET | W10 | W10A-W4B | W10A-W4B | W10A-W4B | W10A-W4B | A-B | W10A-W4B |
| | BRPR BIT6 PRESET | W11 | W11A-W15C | OPEN | W11A-W15C | W11A-W15C | OPEN | W11A-W15C |
| | BRPR BIT5 PRESET | W12 | A-B | A-B | A-C | A-B | A-B | A-C |
| | BRPR BIT3 RESET | W14 | OPEN | OPEN | OPEN | A-B | A-B | A-B |
| | BRPR BIT3 PRESET | W15 | A-B | A-B | A-B | OPEN | OPEN | OPEN |
| | BRPR BIT2 RESET | W16 | A-B | A-B | A-B | A-B | A-B | A-B |
| | BRPR BIT1 RESET | W17 | A-B | A-B | A-B | OPEN | OPEN | OPEN |
| 60HZ ONLY | BRPR BIT0 RESET | W18 | OPEN | OPEN | OPEN | OPEN | OPEN | OPEN |
| | CCR RESET | W19 | A-B | A-B | A-C | A-B | A-B | A-C |
| | CCR RESET | W20 | A-C | A-B | A-C | A-C | A-C | A-C |
| | CCR BIT6 CLOCK | W21 | B-C | B-C | B-C | B-C | B-C | B-C |
| | CCR BIT5 RESET | W22 | A-B | B-C | A-B | A-B | B-C | A-B |
| | CCR RESET | W23 | A-B | A-C | A-D | A-B | A-C | A-D |
| | CCR BIT5 PRESET | W24 | A-B | A-C | A-B | A-B | A-C | A-B |
| | CCR RESET | W25 | A-B | A-B | A-B | A-B | A-B | A-B |
| | CHAR COMPARE | W26 | A-B | OPEN | A-B | A-B | OPEN | A-B |
| | BRPR RESET | W27 | B-C | A-B | B-C | B-C | A-B | B-C |
| | BRPR BIT6 CLOCK | W28 | A-B | A-B | A-B | A-B | A-B | A-B |
| | BRPR RESET | W29 | A-C | A-B | A-C | A-C | A-B | A-C |
| 50 HZ | BRPR BIT0 PRESET | W3 | A-C | A-C | A-C | A-B | A-B | A-B |
| | BRPR BIT0 RESET | W18 | A-B | A-B | A-B | OPEN | OPEN | OPEN |

DATA 100 CORPORATION | SIZE D | 21040320 | REV A | SCALE | SHEET 2 OF 11

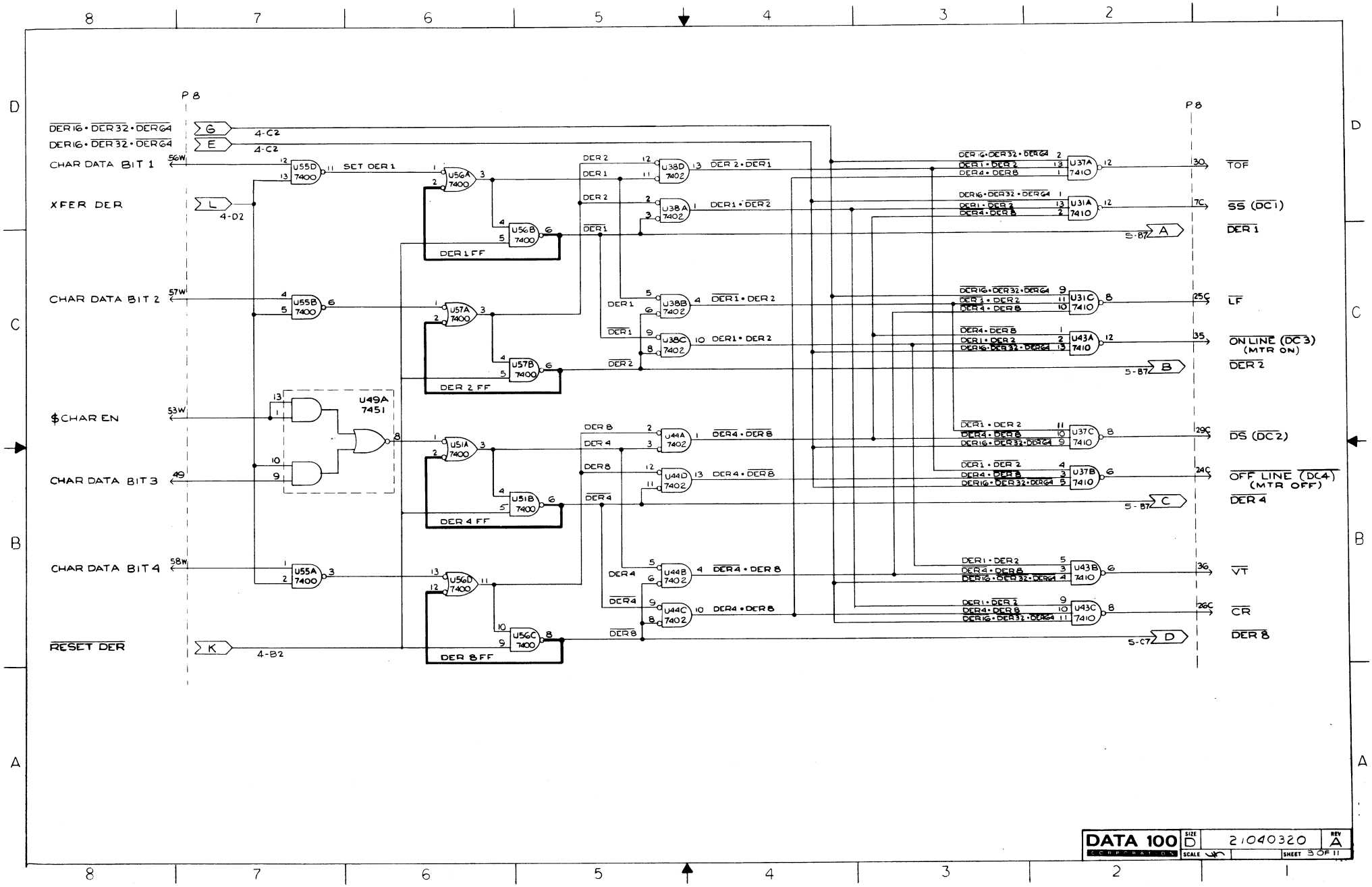
P8
DER16 • DER32 • DERG4
DER16 • DER32 • DERG4
CHAR DATA BIT 1
XFER DER
CHAR DATA BIT 2
$CHAR EN
CHAR DATA BIT 3
CHAR DATA BIT 4
RESET DER
G
E
L
K
4-C2
4-C2
4-D2
4-B2
56W
57W
53W
49
58W
U55D 7400
U55B 7400
U55A 7400
U49A 7451
SET DER 1
U56A 7400
U56B 7400
DER 1 FF
U57A 7400
U57B 7400
DER 2 FF
U51A 7400
U51B 7400
DER 4 FF
U56D 7400
U56C 7400
DER 8 FF
DER 2
DER 1
DER 8
DER 4
U38D 7402
U38A 7402
U38B 7402
U38C 7402
U44A 7402
U44D 7402
U44B 7402
U44C 7402
DER 2 • DER 1
DER 1 • DER 2
DER 4 • DER 8
U37A 7410
U31A 7410
U31C 7410
U43A 7410
U37C 7410
U37B 7410
U43B 7410
U43C 7410
5-B7 A
5-B7 B
5-B7 C
5-C7 D
30 TOF
7C SS (DC1)
DER 1
25C LF
35 ON LINE (DC3) (MTR ON)
DER 2
29C DS (DC2)
24C OFF LINE (DC4) (MTR OFF)
DER 4
36 VT
26C CR
DER 8
DATA 100 CORPORATION
SIZE D
21040320
REV A
SCALE
SHEET 3 OF 11

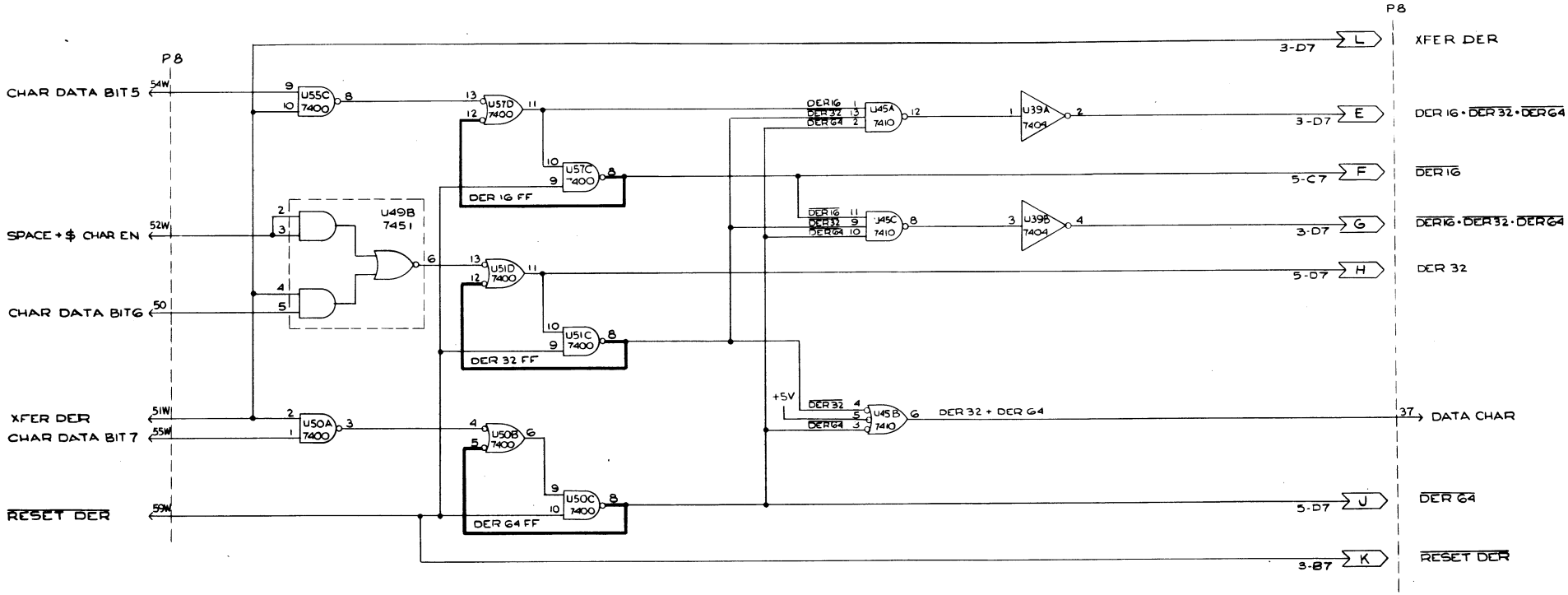


DATA 100 CORPORATION | SIZE D | 21040320 | REV A | SCALE | SHEET 4 OF 11

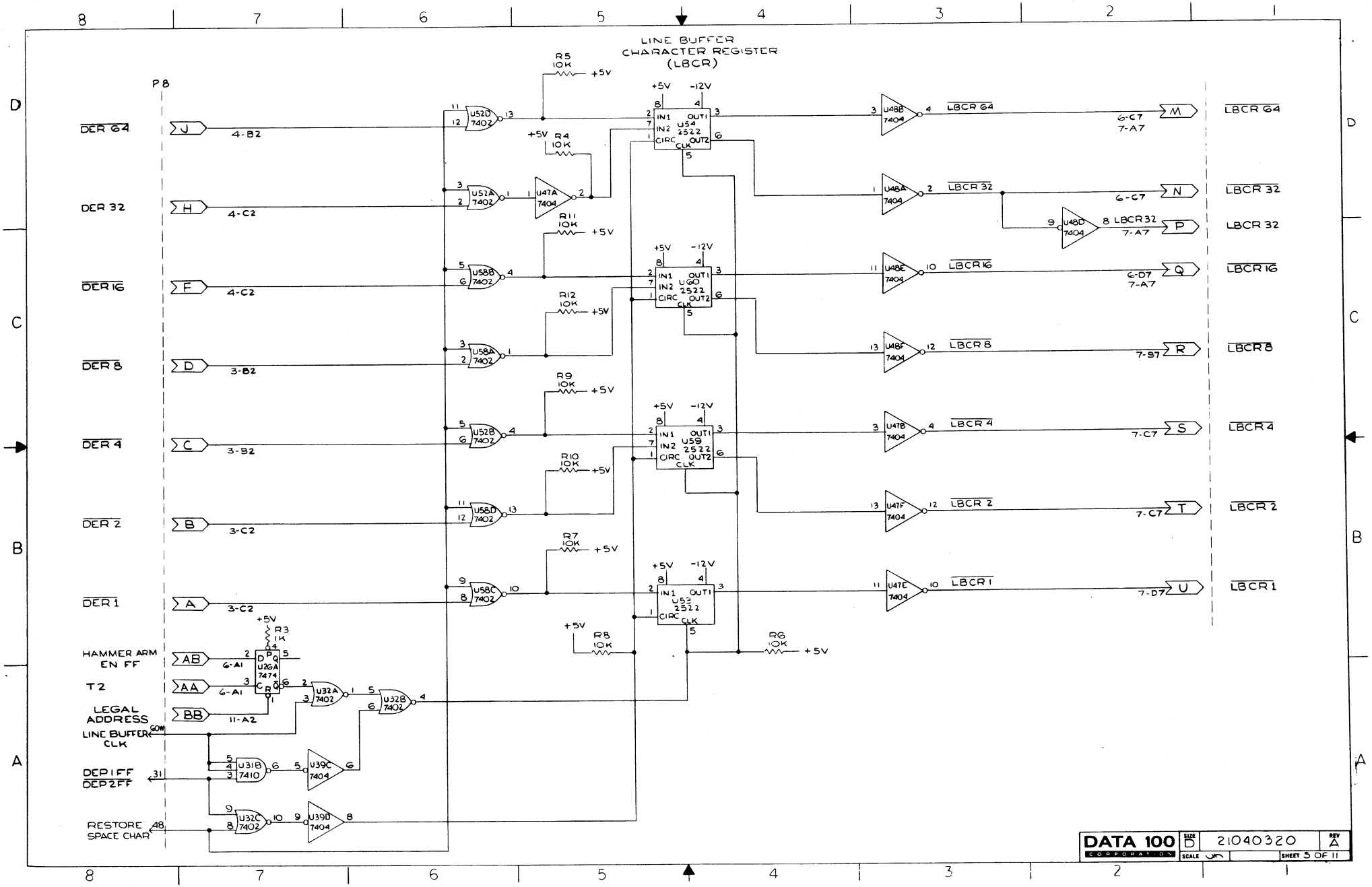
LINE BUFFER
CHARACTER REGISTER
(LBCR)
P8
DER 64
DER 32
DER 16
DER 8
DER 4
DER 2
DER 1
HAMMER ARM EN FF
T2
LEGAL ADDRESS
LINE BUFFER CLK
DEP1FF
DEP2FF
RESTORE SPACE CHAR
U52D 7402
U52A 7402
U58B 7402
U58A 7402
U52B 7402
U58D 7402
U58C 7402
U47A 7404
U54 2522
U60 2522
U59 2522
U52 2522
U48B 7404
U48A 7404
U48D 7404
U48E 7404
U48F 7404
U47B 7404
U47F 7404
U47E 7404
LBCR 64
LBCR 32
LBCR 16
LBCR 8
LBCR 4
LBCR 2
LBCR 1
U26A 7474
U32A 7402
U32B 7402
U31B 7410
U39C 7404
U32C 7402
U39D 7404
DATA 100 CORPORATION
21040320
SHEET 5 OF 11

CHARACTER CODE REGISTER AND CHARACTER COMPARE LOGIC

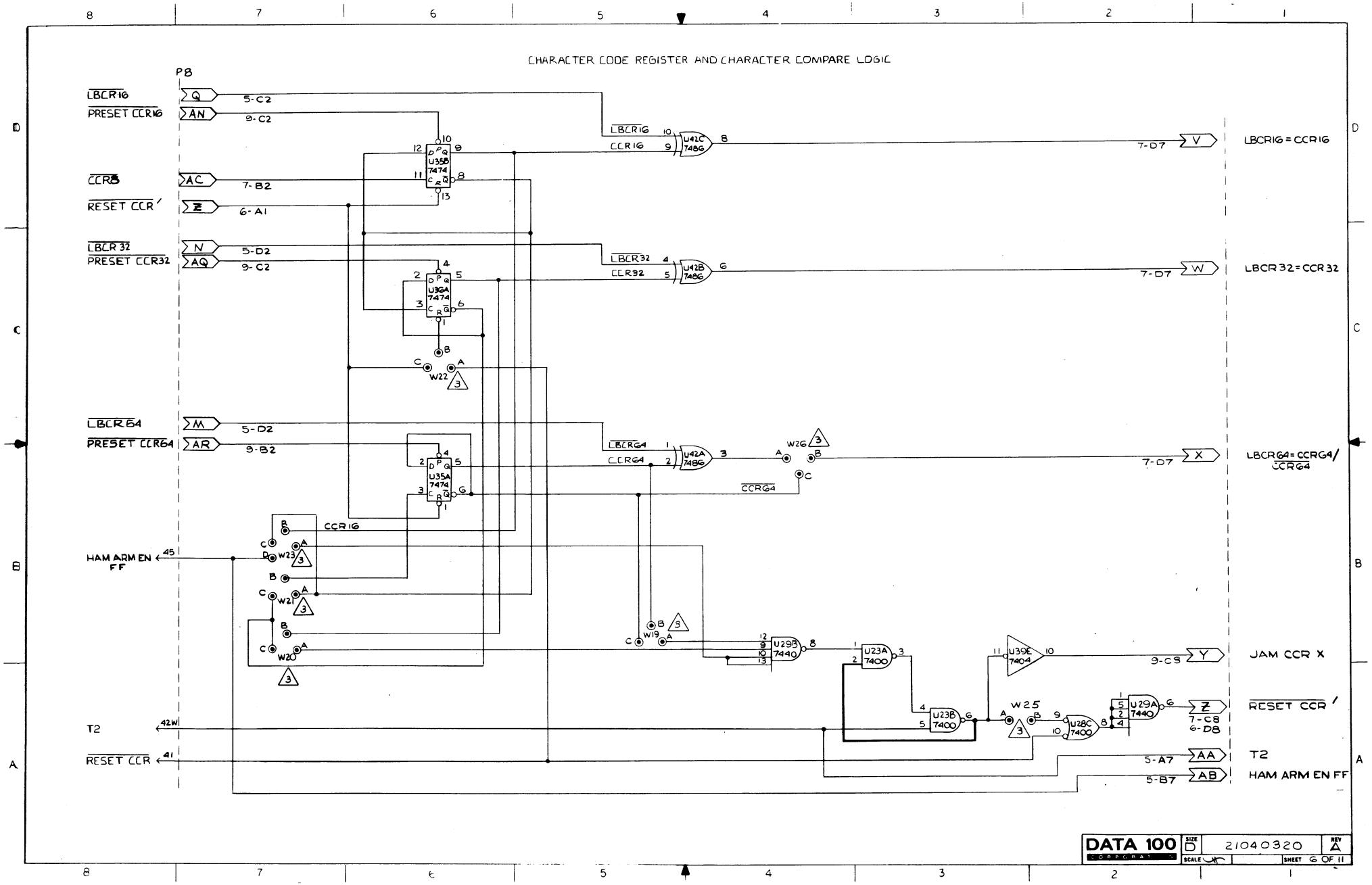


DATA 100 CORPORATION | SIZE D | 21040320 | REV A | SCALE | SHEET 6 OF 11

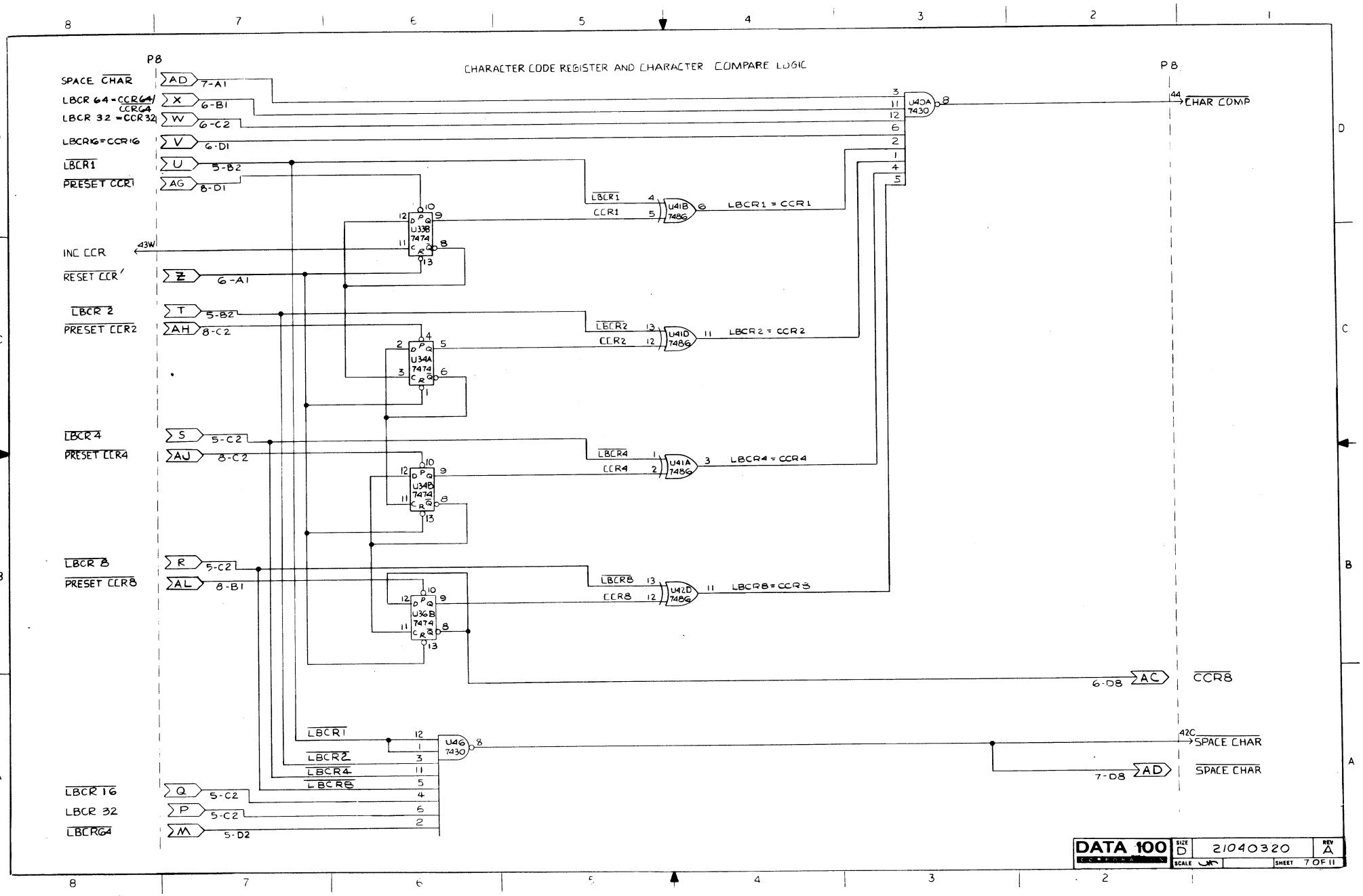
CHARACTER CODE REGISTER AND CHARACTER COMPARE LOGIC
P8
SPACE CHAR
LBCR 64 = CCR64
CCR64
LBCR 32 = CCR32
LBCR16 = CCR16
LBCR1
PRESET CCR1
INC CCR
RESET CCR
LBCR 2
PRESET CCR2
LBCR 4
PRESET CCR4
LBCR 8
PRESET CCR8
LBCR 16
LBCR 32
LBCR64
AD 7-A1
X 6-B1
W 6-C2
V 6-D1
U 5-B2
AG 8-D1
43W
Z 6-A1
T 5-B2
AH 8-C2
S 5-C2
AJ 8-C2
R 5-C2
AL 8-B1
Q 5-C2
P 5-C2
M 5-D2
U33B 7474
U34A 7474
U34B 7474
U36B 7474
U41B 7486
U41D 7486
U41A 7486
U42D 7486
U4CA 7430
U4G 7430
LBCR1 = CCR1
LBCR2 = CCR2
LBCR4 = CCR4
LBCR8 = CCR8
44 CHAR COMP
6-D8 AC CCR8
42C SPACE CHAR
7-D8 AD SPACE CHAR
DATA 100
CORPORATION
SIZE D
21040320
REV A
SCALE
SHEET 7 OF 11

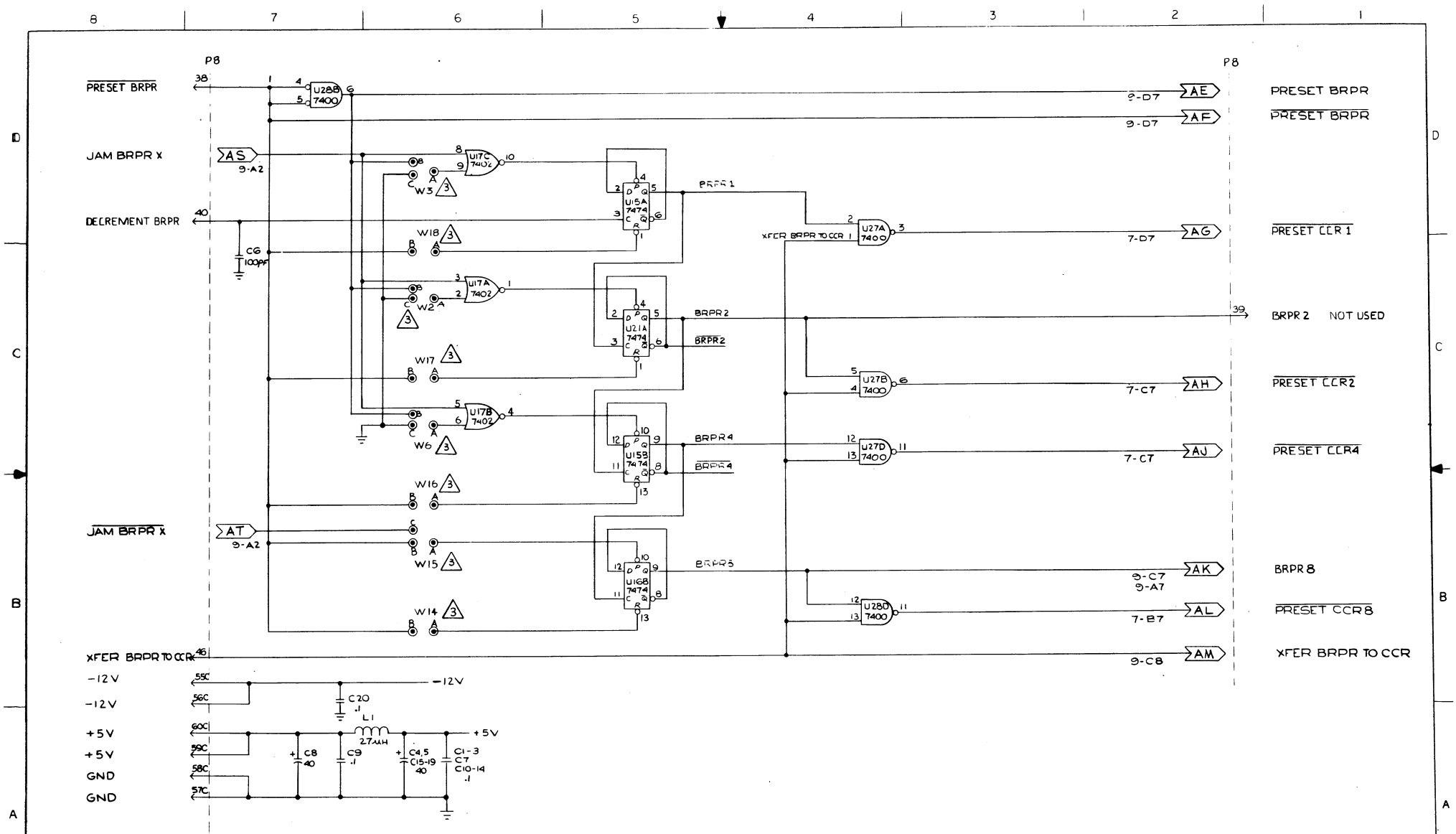


BELT RELATIVE POSITION REGISTER AND CCR PRESET CONTROL

DATA 100 | SIZE D | 21040320 | REV A | SCALE | SHEET 8 OF 11

BELT RELATIVE POSITION REGISTER AND CCR PRESET CONTROL

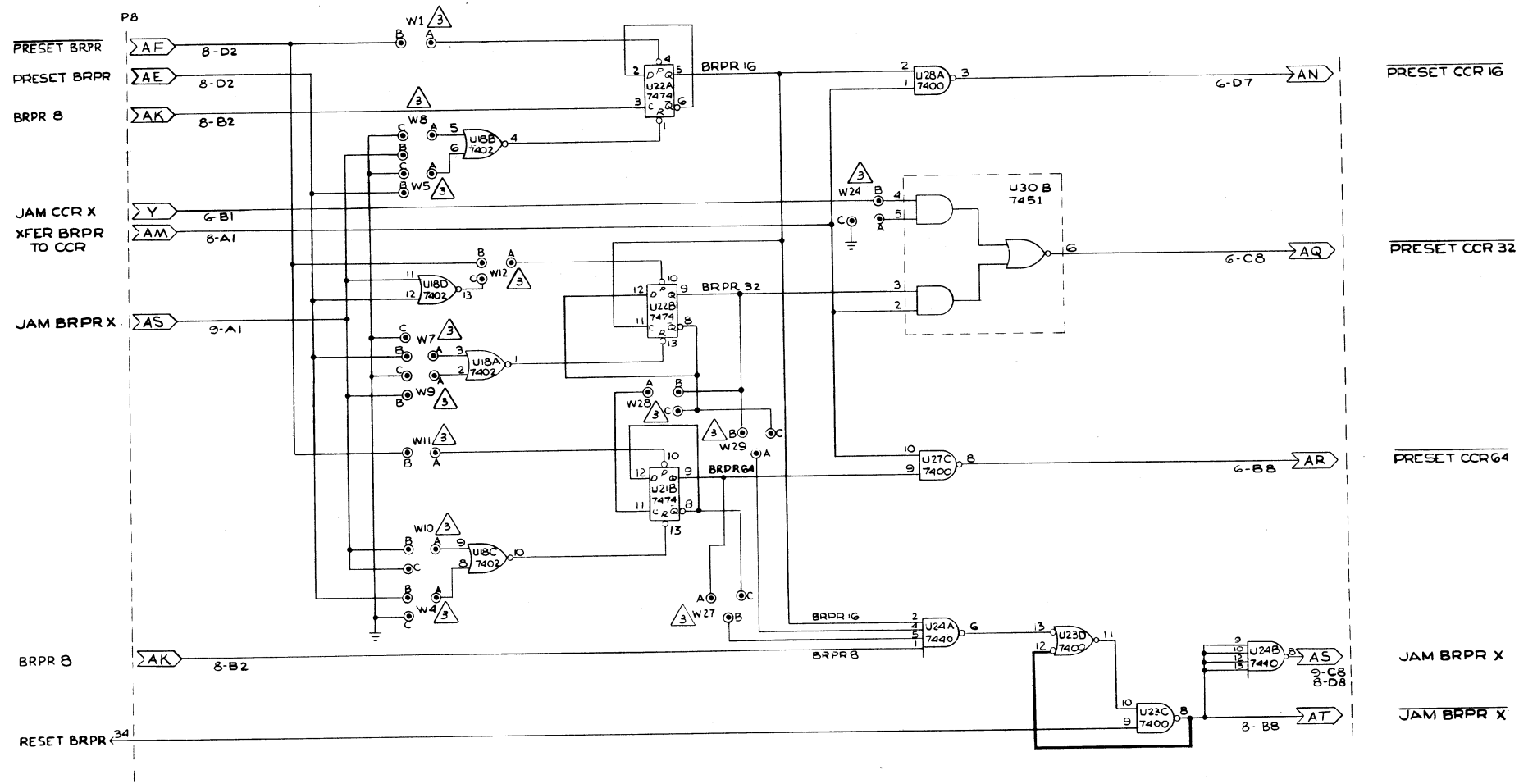


DATA 100 | SIZE D | 21040320 | REV A | SCALE | SHEET 9 OF 11

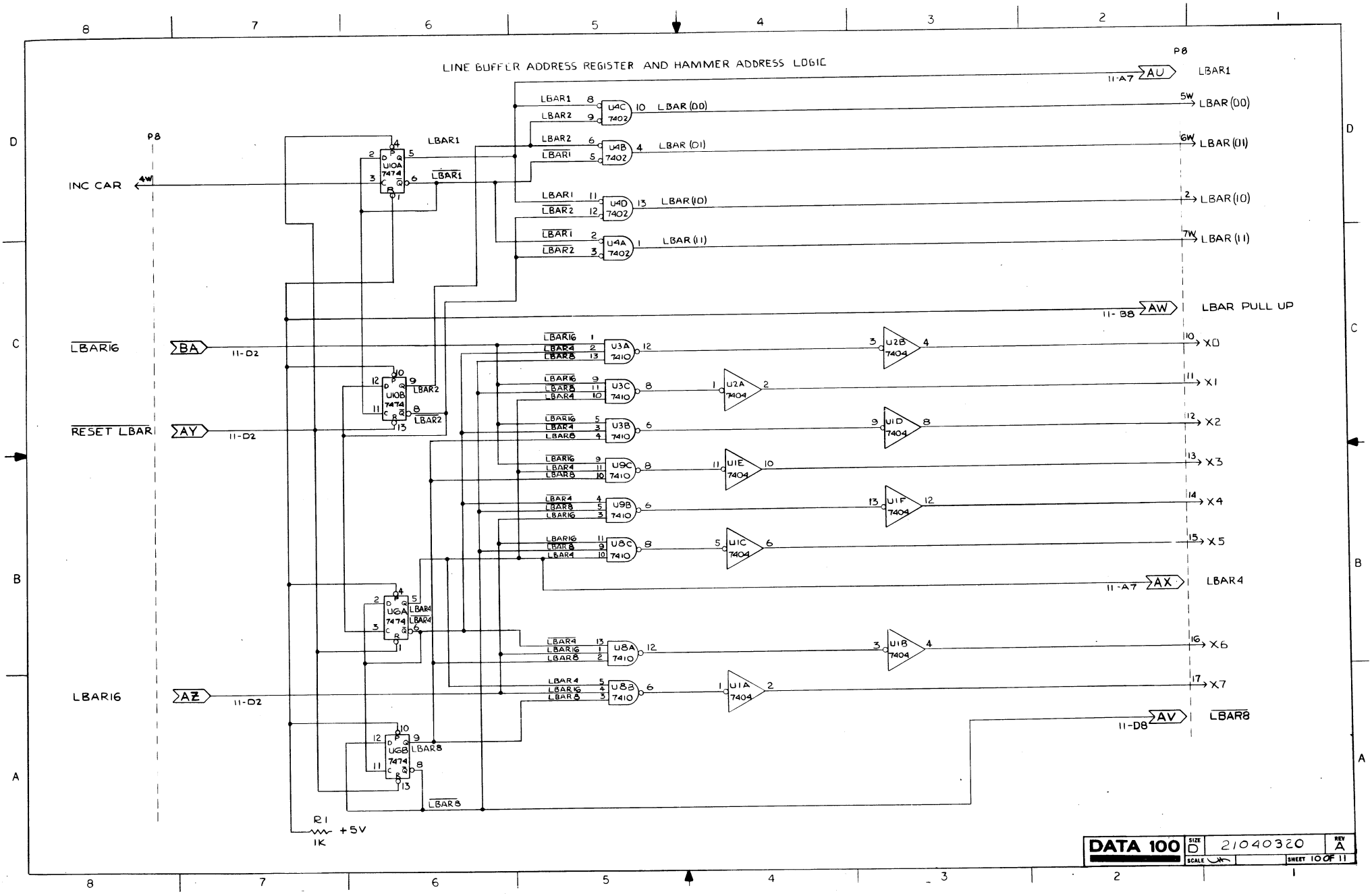
LINE BUFFER ADDRESS REGISTER AND HAMMER ADDRESS LOGIC
P8
INC CAR
4W
LBAR16
BA
11-D2
RESET LBAR
AY
LBAR16
AZ
U10A 7474
U10B 7474
U6A 7474
U6B 7474
U4C 7402
U4B 7402
U4D 7402
U4A 7402
U3A 7410
U3C 7410
U3B 7410
U9C 7410
U9B 7410
U8C 7410
U8A 7410
U8B 7410
U2B 7404
U2A 7404
U1D 7404
U1E 7404
U1F 7404
U1C 7404
U1B 7404
U1A 7404
R1
1K
+5V
11-A7
AU
LBAR1
5W
LBAR(00)
6W
LBAR(01)
2
LBAR(10)
7W
LBAR(11)
11-B8
AW
LBAR PULL UP
10
X0
11
X1
12
X2
13
X3
14
X4
15
X5
11-A7
AX
LBAR4
16
X6
17
X7
11-D8
AV
LBAR8
DATA 100
SIZE D
21040320
REV A
SCALE
SHEET 10 OF 11

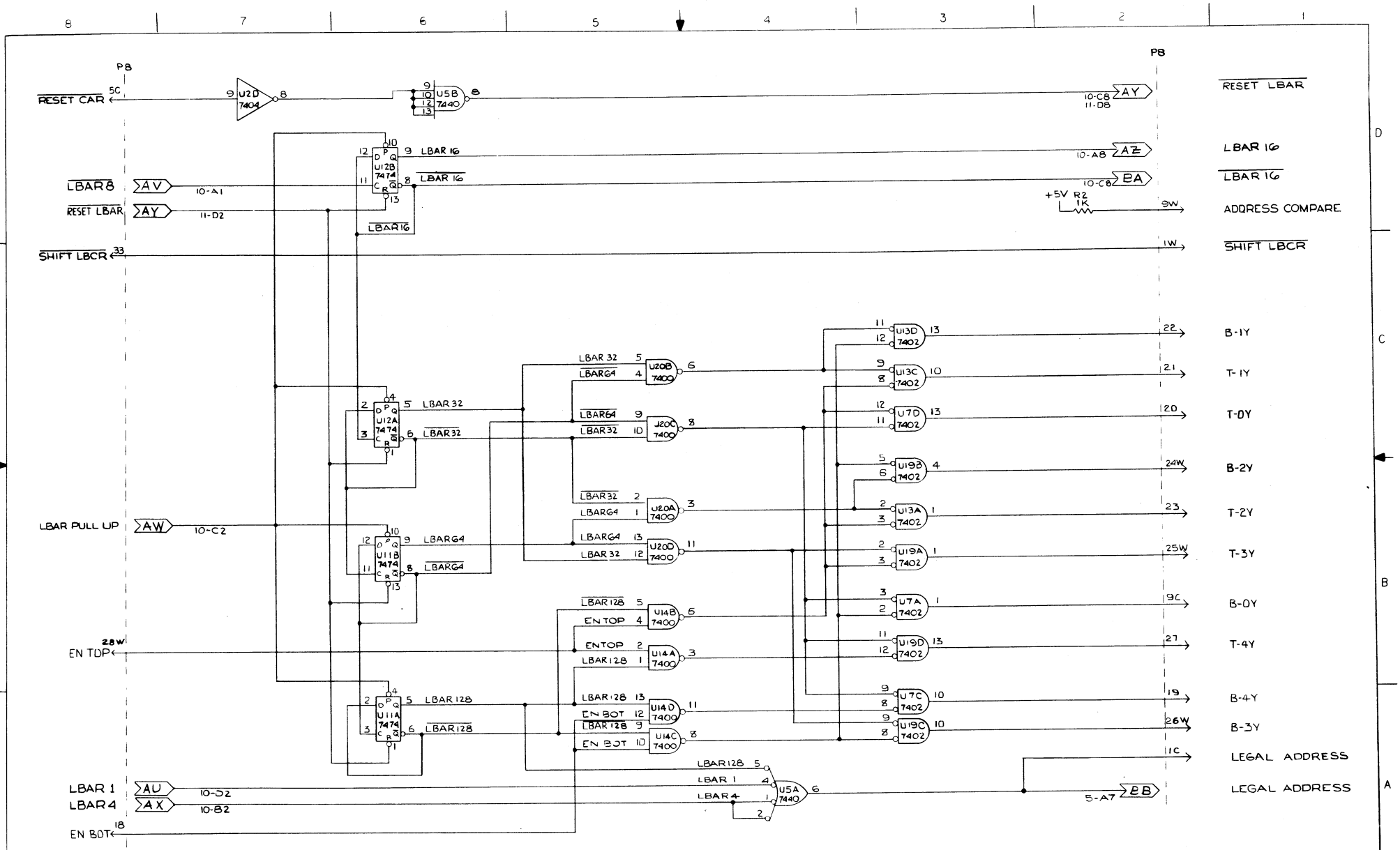


LINE BUFFER ADDRESS REGISTER AND HAMMER ADDRESS LOGIC

DATA 100 | SIZE D | 21040320 | REV A | SCALE | SHEET 11 OF 11

| REVISIONS | | | | |
|---|---|---|---|---|
| ECO | SYM | DESCRIPTION | DATE | APPROVED |
| | A | DRN DR00561 | 8 W | |

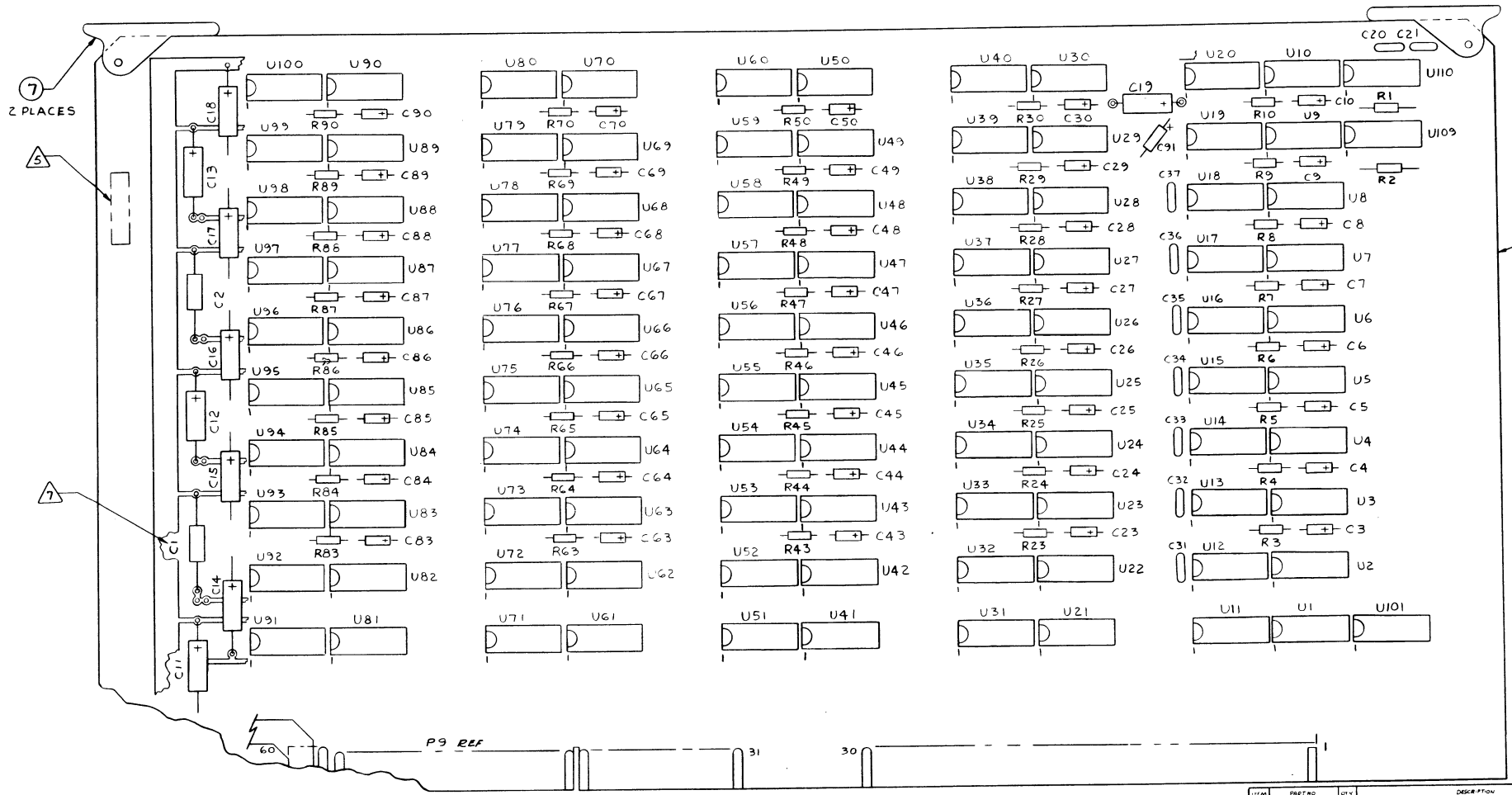


5 RUBBER STAMP UNPROGRAMMED P/N & REV LEVEL AS SHOWN.

4 FOR CONFIGURATION SPECIFICATION SEE 22284010

3. MAX COMPONENT HEIGHT IS .187 IN HEIGHT

2. FOR MASTER LOGIC/SCHEMATIC SEE DRAWING 21041020.

1. FOR ASSY PROCEDURE SEE DATA 100 SPEC. 21100010.

NOTES:

SEE SHEETS 4 TO 5 FOR PARTS LIST

| ITEM | PART NO | QTY | DESCRIPTION |
|---|---|---|---|

DATA 100 CORPORATION

TITLE: PCB ASSY HAMMER BUFFER

DRAWN B. WEBSTER 1/1/78

CHECKED

APPR

SIZE D

DOCUMENT NUMBER 21041020

REV A

DR

DO NOT SCALE PRINT

SCALE 2/1

SHEET 1 OF 5

N31.0.006

P.C.B. ASSEMBLY HAMMER BUFFER

| PART № | DESCRIPTION |
|---|---|
| 54400277 | Resistor, 470 Ohms, 1/4W, ±5% |
| 54400285 | Resistor, 1K Ohms, 1/4W, ±5% |
| 52325358 | Capacitor, 1 ufd, ±10%, 6 WVDC |
| 52325055 | Capacitor, 2.2 ufd, ±10%, 6 WVDC |
| 52325127 | Capacitor, 40 ufd,±10%, 10 WVDC |
| 52253099 | Capacitor, .1 ufd, ±20%, 50 WVDC (Radial) |
| 52256000 | Capacitor, .1 ufd, ±20%, 50 WVDC (Axial) |
| 51320900 | Integrated Circuit - 7400N |
| 51320005 | Integrated Circuit - 7440N |

| GEOMETRIC CHARACTERISTIC SYMBOLS | | |
|---|---|---|
| | Characteristic | Symbol |
| Form Tolerances — For Single Feature | FLATNESS | ▱ |
| | STRAIGHTNESS | — |
| | ROUNDNESS (CIRCULARITY) | ○ |
| | CYLINDRICITY | ⌭ |
| | PROFILE OF ANY LINE | ⌒ |
| | PROFILE OF ANY SURFACE | ⌓ |
| For Related Features | PARALLELISM | ∥ |
| | PERPENDICULARITY (SQUARENESS) | ⊥ |
| | ANGULARITY | ∠ |
| | RUNOUT | ↗ |
| Positional Tolerances | TRUE POSITION | ⊕ |
| | CONCENTRICITY | ◎ |
| | SYMMETRY | ⌯ |

DATA 100 CONFIDENTIAL INFORMATION
This drawing is the Confidential, Proprietary Property of DATA 100 and includes trade secret information. It is to be used for no purpose other than the intended purpose for which it is delivered and is not to be used by or disclosed to any other individual or organization without the express written authorization of a representative of DATA 100.

| REVISIONS | | | | | |
|---|---|---|---|---|---|
| REV | ECO | DESCRIPTION | ORIG. | DATE | APPD |
| A | 0 | DRNDR00561 | BW | | |

| HIGHEST REF DES | REF DES NOT USED |
|---|---|
| R90 | R11-22, 31-42, 51-62, 71-82 |
| C91 | C22, 38-42, 51-62, 71-82 |
| U110 | U102-108 |

| POWER DISTRIBUTION FOR IC'S | | |
|---|---|---|
| REF DESIGNATION | +5 | GND |
| U1-101, 109, 110 | 14 | 7 |
| | | |
| | | |
| | | |

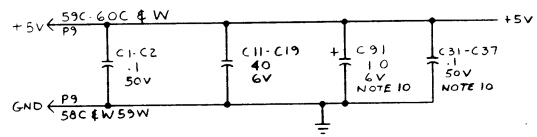


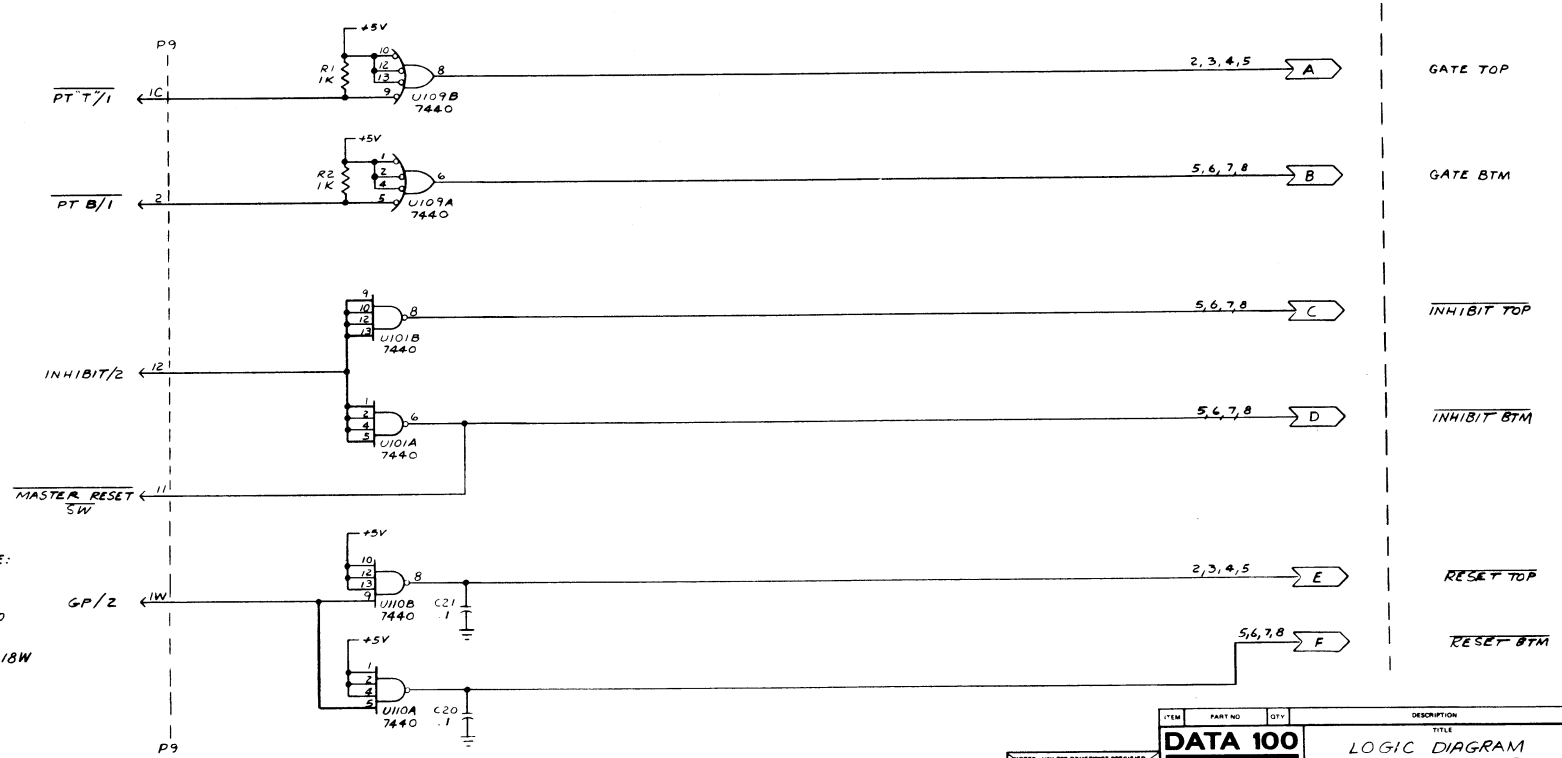


8. CAPACITORS C31-C37 & C91 ARE USED ON N-310005 & N-310006 ONLY.

7. N-310005 1322 330 OHM RESISTORS
   310006 1321/1323 560 OHM RESISTORS
   N-310006 1321/1323 470 OHM RESISTORS

6. EXAMPLE OF INPUT & OUTPUT NOMENCLATURE:
   "T1Y" INPUT TO BOARD "A" HAS OUTPUT TO "TOP HAMDRVR 53" ON BOARD "A".
   "T3Y" INPUT TO BOARD "B" HAS OUTPUT TO "TOP HAMDRVR 117" ON BOARD "B".

5. P9-18C INDICATES COMPONENT SIDE P9-18W INDICATES WIRING SIDE.

4 EXAMPLE OF ZONE AND TAG LINES;

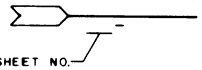


3. ALL I.C. ARE 7400 UNLESS OTHERWISE SHOWN.

2. ALL CAPACITOR VALUES ARE IN MICROFARADS.

1. ALL RESISTOR VALUES ARE IN OHMS. ± 5% 1/4 W.

NOTES:

NOTES: UNLESS OTHERWISE SPECIFIED
ALL DIMENSIONS IN INCHES
HOLE DIAMETER TOLERANCES
0 THRU .200 .001 THRU .500 .501 & LARGER
+.005 -.000 +.005 -.000 +.010 -.000
REMOVE ALL BURRS AND SHARP EDGES
DIMENSIONS APPLY AFTER FINISHING, HEAT TREATING, AND PLATING
TOLERANCE UNLESS OTHERWISE SPECIFIED
1 PLACE ± 2 PLACE ± ANGLES ±

| ITEM | PART NO | QTY | DESCRIPTION |
|---|---|---|---|

DATA 100

TITLE: LOGIC DIAGRAM HAMMER BUFFER

| | | |
|---|---|---|
| DRAWN | B WEBSTER | 1-24-78 |
| CHECKED | | 2-2-78 |
| APPROVED | | |

SIZE: D
DOCUMENT NUMBER: 21041020
REV: A
DO NOT SCALE PRINT
SCALE
SHEET 1 OF 8

610003-F

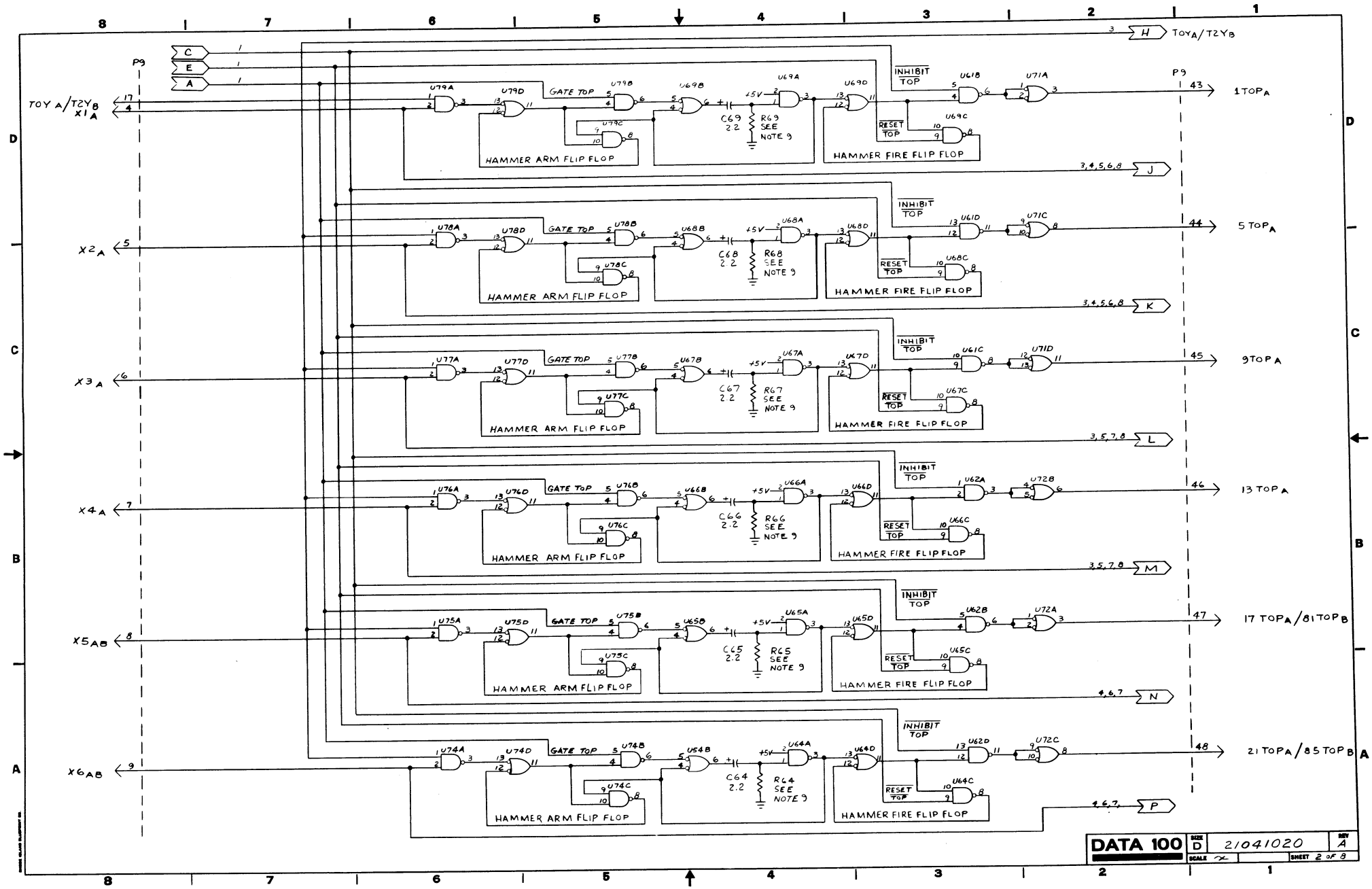
C
E
A
H
TOYA/T2YB
P9
TOY A/T2YB
X1A
X2A
X3A
X4A
X5AB
X6AB
U79A
U79D
U79C
U79B
U69B
U69A
U69D
U69C
U61B
U71A
U78A
U78D
U78C
U78B
U68B
U68A
U68D
U68C
U61D
U71C
U77A
U77D
U77C
U77B
U67B
U67A
U67D
U67C
U61C
U71D
U76A
U76D
U76C
U76B
U66B
U66A
U66D
U66C
U62A
U72B
U75A
U75D
U75C
U75B
U65B
U65A
U65D
U65C
U62B
U72A
U74A
U74D
U74C
U74B
U54B
U64A
U64D
U64C
U62D
U72C
GATE TOP
INHIBIT TOP
RESET TOP
HAMMER ARM FLIP FLOP
HAMMER FIRE FLIP FLOP
C69 2.2
R69 SEE NOTE 9
C68 2.2
R68 SEE NOTE 9
C67 2.2
R67 SEE NOTE 9
C66 2.2
R66 SEE NOTE 9
C65 2.2
R65 SEE NOTE 9
C64 2.2
R64 SEE NOTE 9
+5V
43
1TOPA
44
5TOPA
45
9TOPA
46
13TOPA
47
17TOPA/81TOPB
48
21TOPA/85TOPB
3,4,5,6,8
J
3,4,5,6,8
K
3,5,7,8
L
3,5,7,8
M
4,6,7
N
4,6,7,
P
DATA 100
SIZE D
21041020
REV A
SCALE
SHEET 2 OF 8

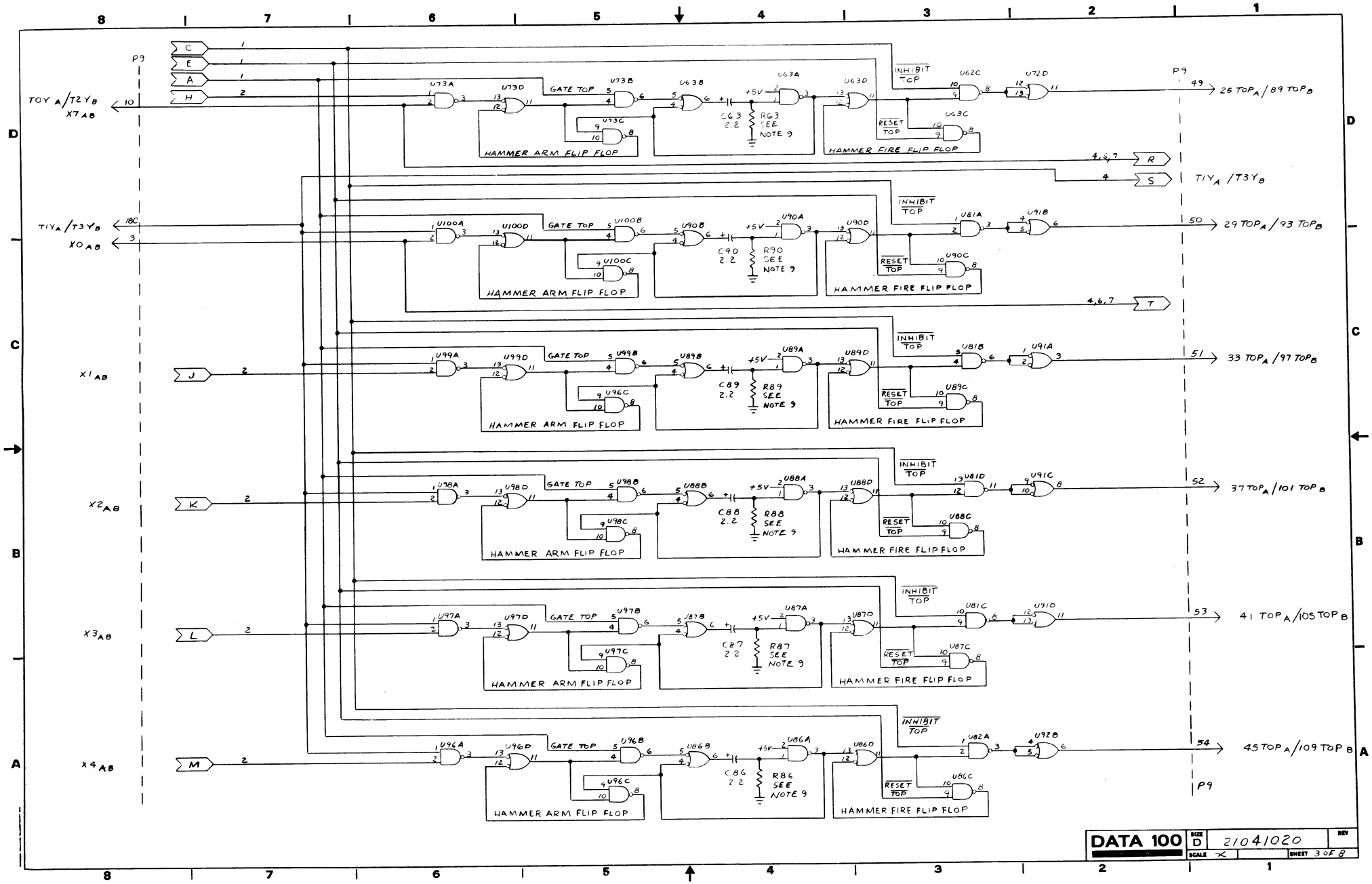
P9
C
E
A
H
TOY A/T2Y B
X7 AB
U73A
U73D
GATE TOP
U73B
U63B
+5V
U63A
U63D
INHIBIT TOP
U62C
U72D
25 TOP A/89 TOP B
C63 2.2
R63 SEE NOTE 9
U73C
U63C
RESET TOP
HAMMER ARM FLIP FLOP
HAMMER FIRE FLIP FLOP
R
S
T1Y A/T3Y B
X0 AB
U100A
U100D
U100B
U90B
U90A
U90D
U81A
U91B
29 TOP A/93 TOP B
C90 2.2
R90 SEE NOTE 9
U100C
U90C
X1 AB
J
U99A
U99D
U99B
U89B
U89A
U89D
U81B
U91A
33 TOP A/97 TOP B
C89 2.2
R89 SEE NOTE 9
U96C
U89C
X2 AB
K
U98A
U98D
U98B
U88B
U88A
U88D
U81D
U91C
37 TOP A/101 TOP B
C88 2.2
R88 SEE NOTE 9
U98C
U88C
X3 AB
L
U97A
U97D
U97B
U87B
U87A
U87D
U81C
U91D
41 TOP A/105 TOP B
C87 2.2
R87 SEE NOTE 9
U97C
U87C
X4 AB
M
U96A
U96D
U96B
U86B
U86A
U86D
U82A
U92B
45 TOP A/109 TOP B
C86 2.2
R86 SEE NOTE 9
U96C
U86C
DATA 100
SIZE D
21041020
REV
SCALE X
SHEET 3 OF 8

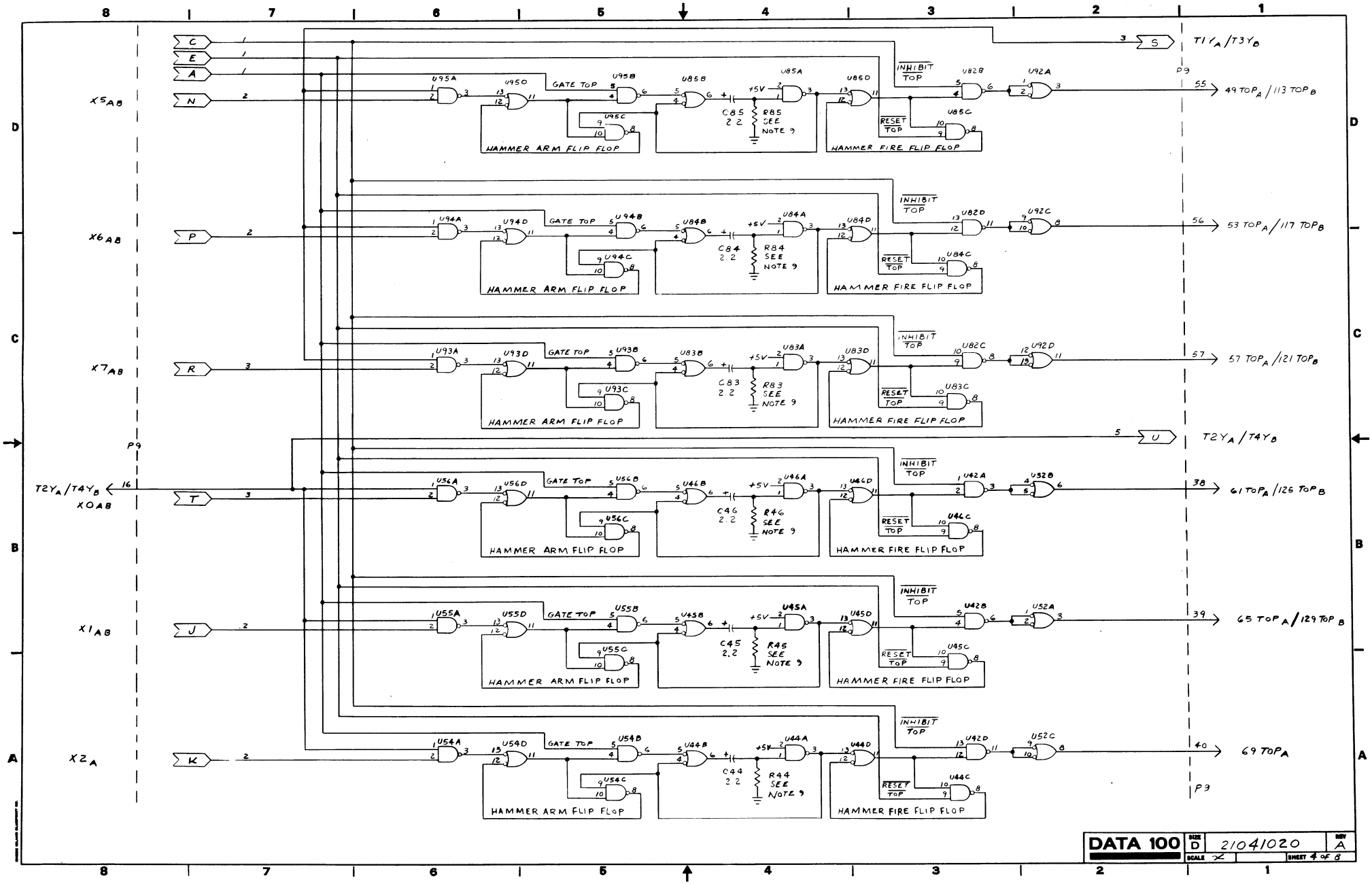
C
E
A
N
X5AB
U95A
U95D
GATE TOP
U95B
U85B
C85 2.2
+5V
U85A
R85 SEE NOTE 9
U85D
INHIBIT TOP
U82B
U92A
U85C
RESET TOP
HAMMER ARM FLIP FLOP
HAMMER FIRE FLIP FLOP
S
T1Y_A/T3Y_B
P9
55
49 TOP_A/113 TOP_B
P
X6AB
U94A
U94D
U94B
U84B
C84 2.2
U84A
R84 SEE NOTE 9
U84D
U82D
U92C
U84C
56
53 TOP_A/117 TOP_B
R
X7AB
U93A
U93D
U93B
U83B
C83 2.2
U83A
R83 SEE NOTE 9
U83D
U82C
U92D
U83C
57
57 TOP_A/121 TOP_B
U
T2Y_A/T4Y_B
T
X0AB
U56A
U56D
U56B
U46B
C46 2.2
U46A
R46 SEE NOTE 9
U46D
U42A
U52B
U46C
38
61 TOP_A/125 TOP_B
J
X1AB
U55A
U55D
U55B
U45B
C45 2.2
U45A
R45 SEE NOTE 9
U45D
U42B
U52A
U45C
39
65 TOP_A/129 TOP_B
K
X2A
U54A
U54D
U54B
U44B
C44 2.2
U44A
R44 SEE NOTE 9
U44D
U42D
U52C
U44C
40
69 TOP_A
P9
DATA 100
SIZE D
2104020
REV A
SCALE X
SHEET 4 OF 8

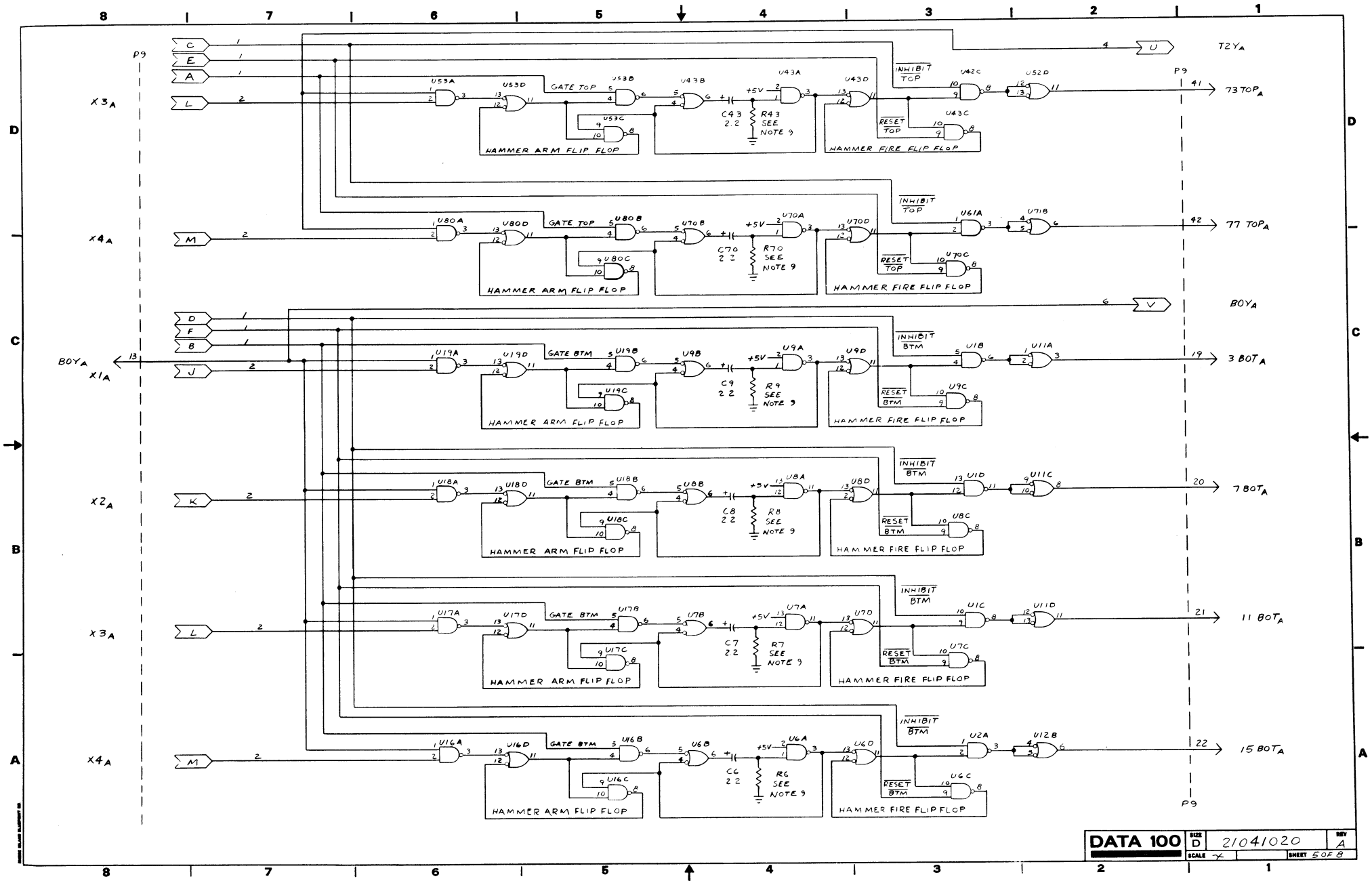
C
E
A
L
X3A
U53A
U53D
GATE TOP
U53B
U53C
HAMMER ARM FLIP FLOP
U43B
C43
2.2
R43
SEE
NOTE 9
+5V
U43A
U43D
INHIBIT TOP
RESET TOP
U43C
HAMMER FIRE FLIP FLOP
U42C
U52D
U
T2YA
P9
41
73TOPA
M
X4A
U80A
U80D
U80B
U80C
U70B
C70
2.2
R70
U70A
U70D
U70C
U61A
U71B
42
77 TOPA
V
BOYA
D
F
B
J
X1A
U19A
U19D
GATE BTM
U19B
U19C
U9B
C9
R9
U9A
U9D
INHIBIT BTM
RESET BTM
U9C
U1B
U11A
19
3 BOTA
K
X2A
U18A
U18D
U18B
U18C
U8B
C8
R8
U8A
U8D
U8C
U1D
U11C
20
7 BOTA
U17A
U17D
U17B
U17C
U7B
C7
R7
U7A
U7D
U7C
U1C
U11D
21
11 BOTA
U16A
U16D
U16B
U16C
U6B
C6
R6
U6A
U6D
U6C
U2A
U12B
22
15 BOTA
DATA 100
SIZE D
21041020
REV A
SCALE X
SHEET 5 OF 8

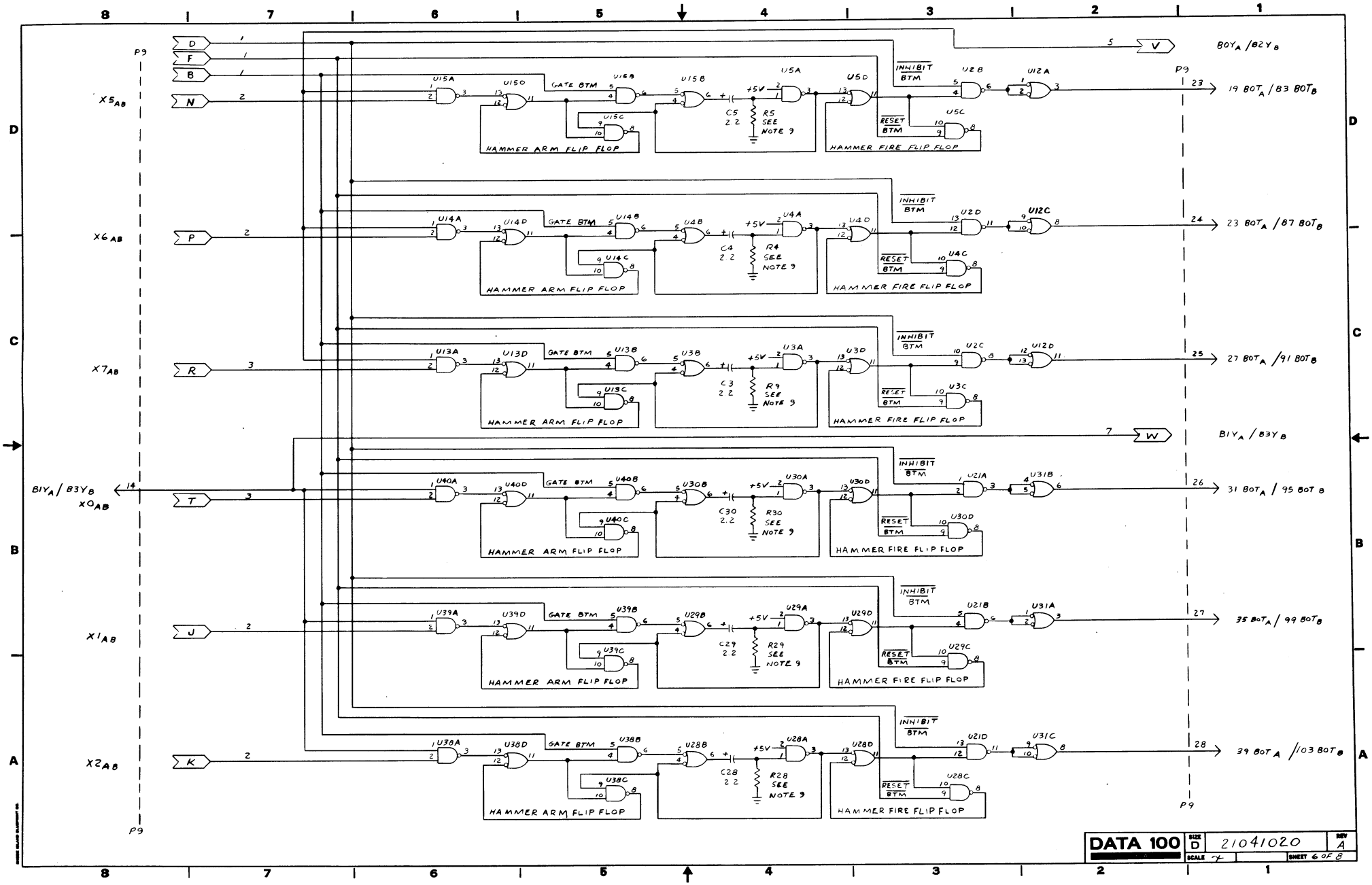


DATA 100 | SIZE D | 21041020 | REV A | SCALE | SHEET 6 OF 8

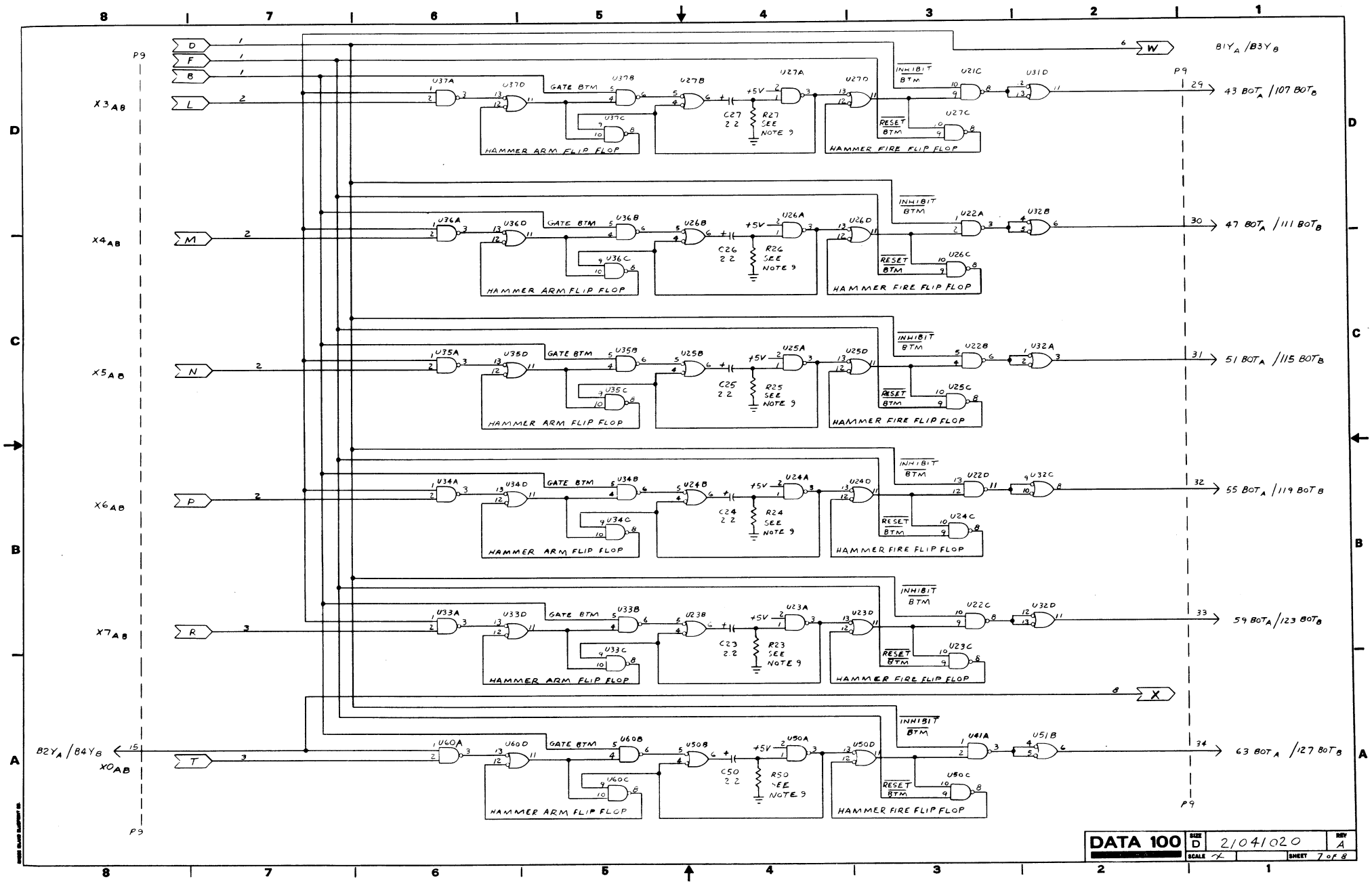
D
F
B
L
M
N
P
R
T
W
X
X3AB
X4AB
X5AB
X6AB
X7AB
B2YA /B4YB
X0AB
B1YA /B3YB
43 BOTA /107 BOTB
47 BOTA /111 BOTB
51 BOTA /115 BOTB
55 BOTA /119 BOTB
59 BOTA /123 BOTB
63 BOTA /127 BOTB
GATE BTM
INHIBIT BTM
RESET BTM
+5V
HAMMER ARM FLIP FLOP
HAMMER FIRE FLIP FLOP
R27 SEE NOTE 9
R26 SEE NOTE 9
R25 SEE NOTE 9
R24 SEE NOTE 9
R23 SEE NOTE 9
R50 SEE NOTE 9
P9
DATA 100
SIZE D
2104020
REV A
SCALE
SHEET 7 OF 8

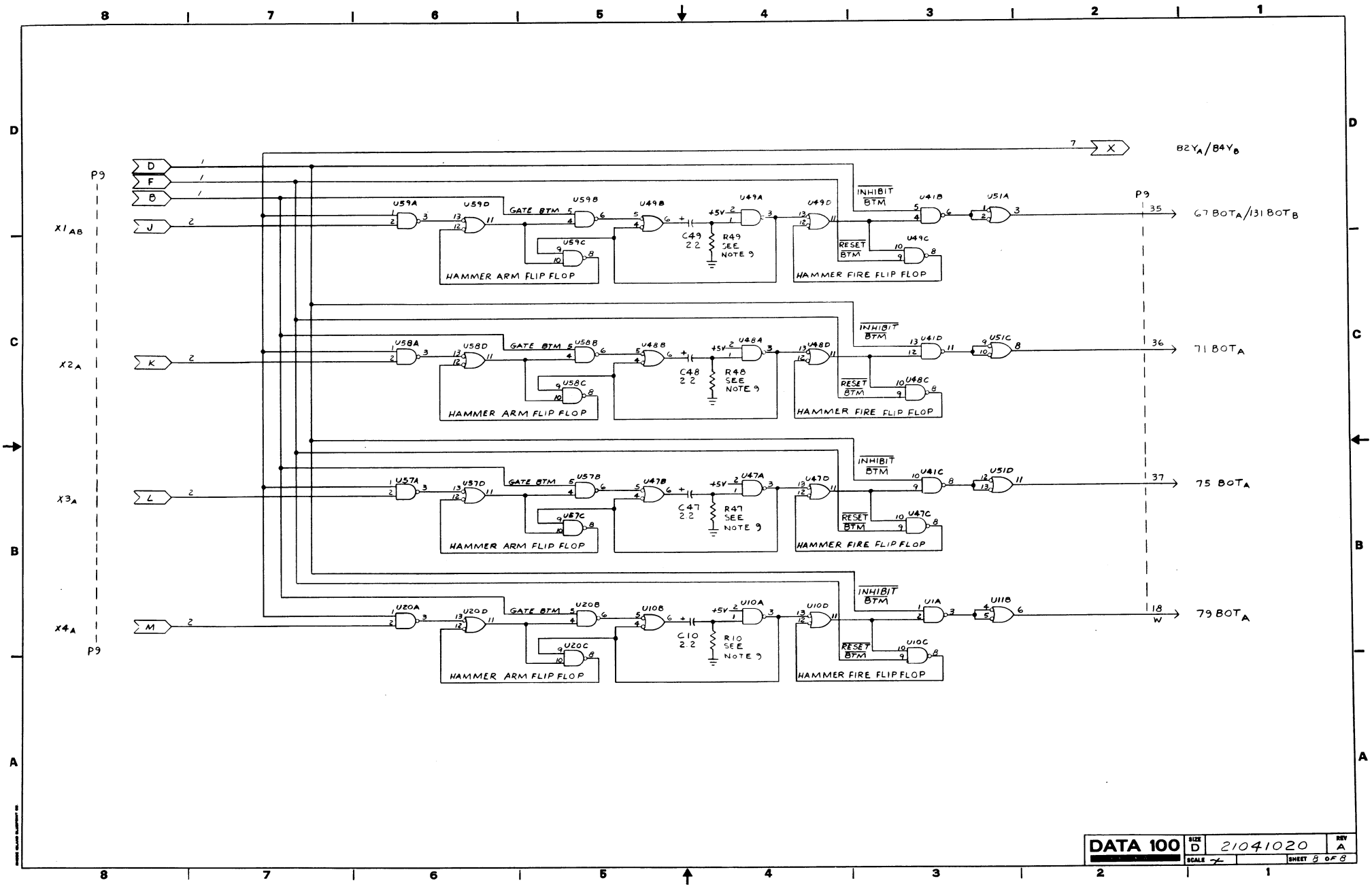


DATA 100 | SIZE D | 21041020 | REV A | SCALE — | SHEET 8 OF 8

DATA 100 CONFIDENTIAL INFORMATION
This drawing is the Confidential Proprietary Property of DATA 100 and includes trade secret information. It is to be used for no purpose other than the limited purpose for which it is delivered and is not to be used by or disclosed to any other individual or legal entity without the express written authorization of a representative of DATA 100

| REVISIONS | | | | | |
|---|---|---|---|---|---|
| REV | ECO | DESCRIPTION | ORIG. | DATE | APPD |
| A | 9 | DRNDR00561 | BW | | |

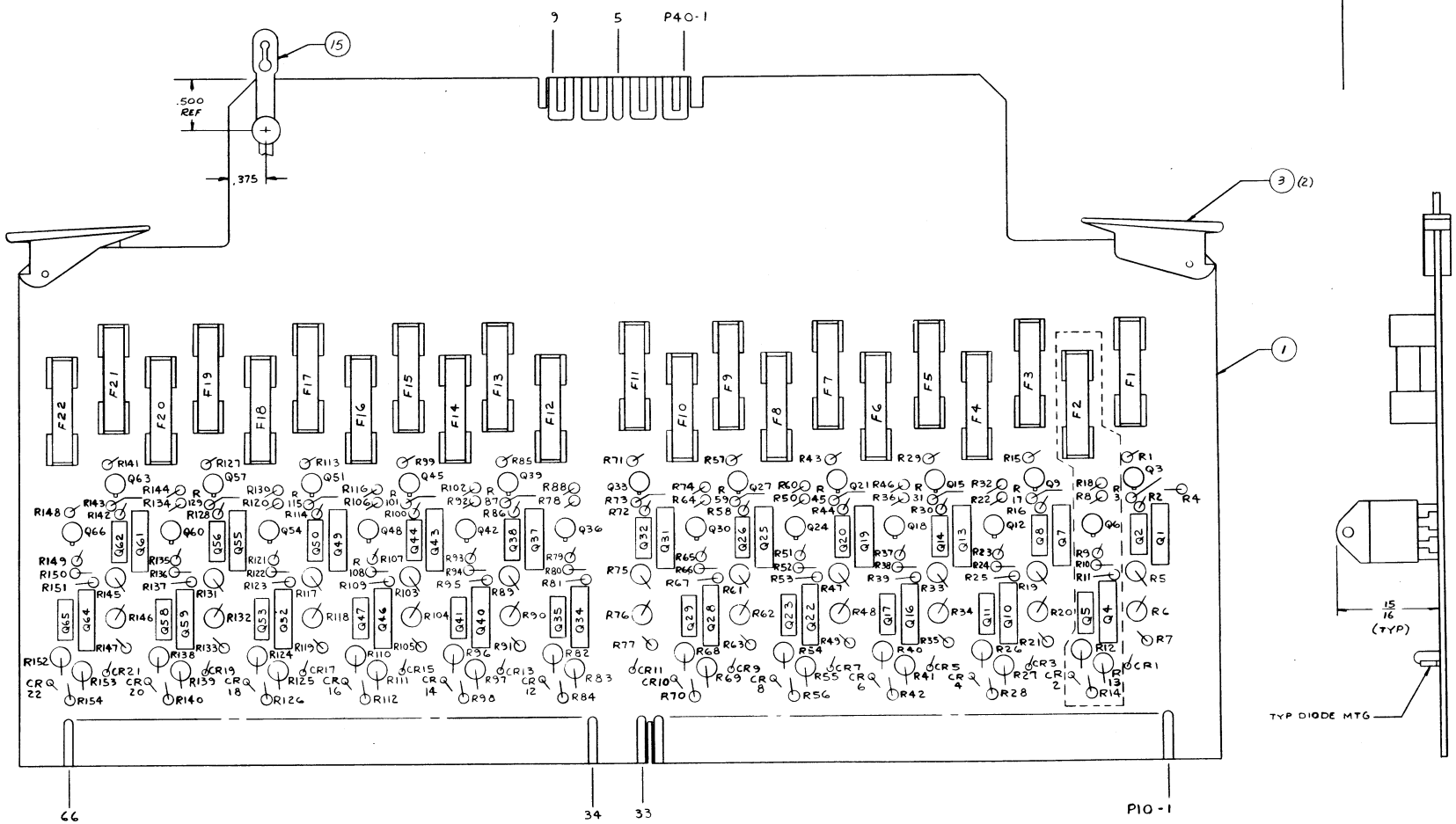


SEE SHEETS 2 TO 3 FOR PARTS LIST

| ITEM | PART NO | QTY | DESCRIPTION |
|---|---|---|---|

DATA 100 CORPORATION

TITLE: PCB ASSY HAMMER DRIVER, W/O ALARM CIRCUIT

DRAWN B WEBSTER 1-9-70
CHECKED
APPROVED

SIZE D | DOCUMENT NUMBER 81040232 | REV. A

D R | DO NOT SCALE PRINT | SCALE 2/1 | SHEET 1 OF 3

TOLERANCE UNLESS OTHERWISE SPECIFIED: 1 PLACE ± | 2 PLACE ± | ANGLES ±

310106-E1

1. MAKE PER DATA 100 SPEC. 22270100.

NOTES:

HAMMER DRIVER W/O ALARM CIRCUIT

| PART № | DESCRIPTION |
|---|---|
| 54400055 | Resistor, 3.9, ±5%, 1/4W |
| 54400085 | Resistor, 68, ±5%, 1/4W |
| 54400265 | Resistor, 150, ±5%, 1/4W |
| 54400285 | Resistor, 1K, ±5%, 1/4W |
| 54400481 | Resistor, 10K, ±5%, 1/4W |
| 54400143 | Resistor, 4.7, ±5%, 1/4W |
| 51631003 | Diode, 1N914B |
| 54400157 | Transistor, 29B (TIP) |
| 51128100 | Transistor, 33B (TIP) |
| 51122650 | Transistor, 2N2222A |
| 55238003 | Fuse, AGX, 1-1/2 Amp |
| 63611020 | Ejector |
| 55611155 | Fuse Clip |
| 56261105 | Wire Tie |

NOTES:
1. UNLESS OTHERWISE SPECIFIED:
   ALL RESISTOR VALUES ARE IN OHMS; ± 5%, 1/4 W
   ALL FUSES ARE 1.5 AMPS
   ALL DIODES ARE 1N457
2. HAMMER COIL SHOWN FOR REFERENCE ONLY AND IS NOT LOCATED ON THIS ASSEMBLY

| HIGHEST REF. DES | REF DES. NOT USED |
|---|---|
| CR22 | — |
| F22 | — |
| Q66 | — |
| R154 | — |

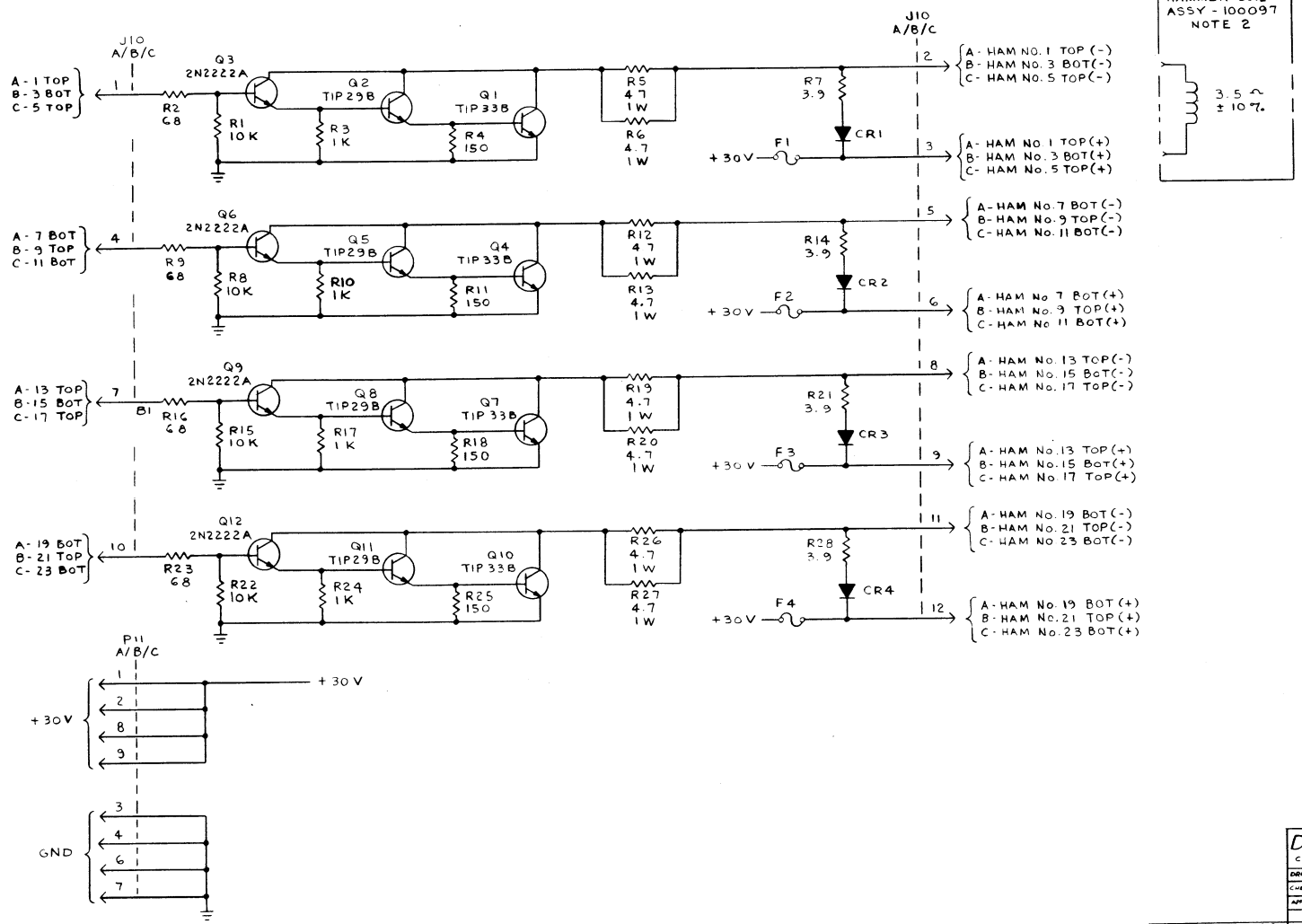


| REV | ECO | DESCRIPTION | ORIG | DATE | APPD |
|---|---|---|---|---|---|
| A | | DRNDR00561 | B.W | | |

DATA 100 CORPORATION

TITLE: SCHEMATIC, HAMMER DRIVER W/O ALARM

DRAWN B. WEBSTER 1/12/78
CHECKED
APPROVED

SIZE D | DOCUMENT NUMBER 21040232 | REV A

SCALE 1 = 1 SCALE PRINT | SHEET 1 OF 4

TOLERANCE UNLESS OTHERWISE SPEC. FRACTIONS ± ANGLES ±

6100026

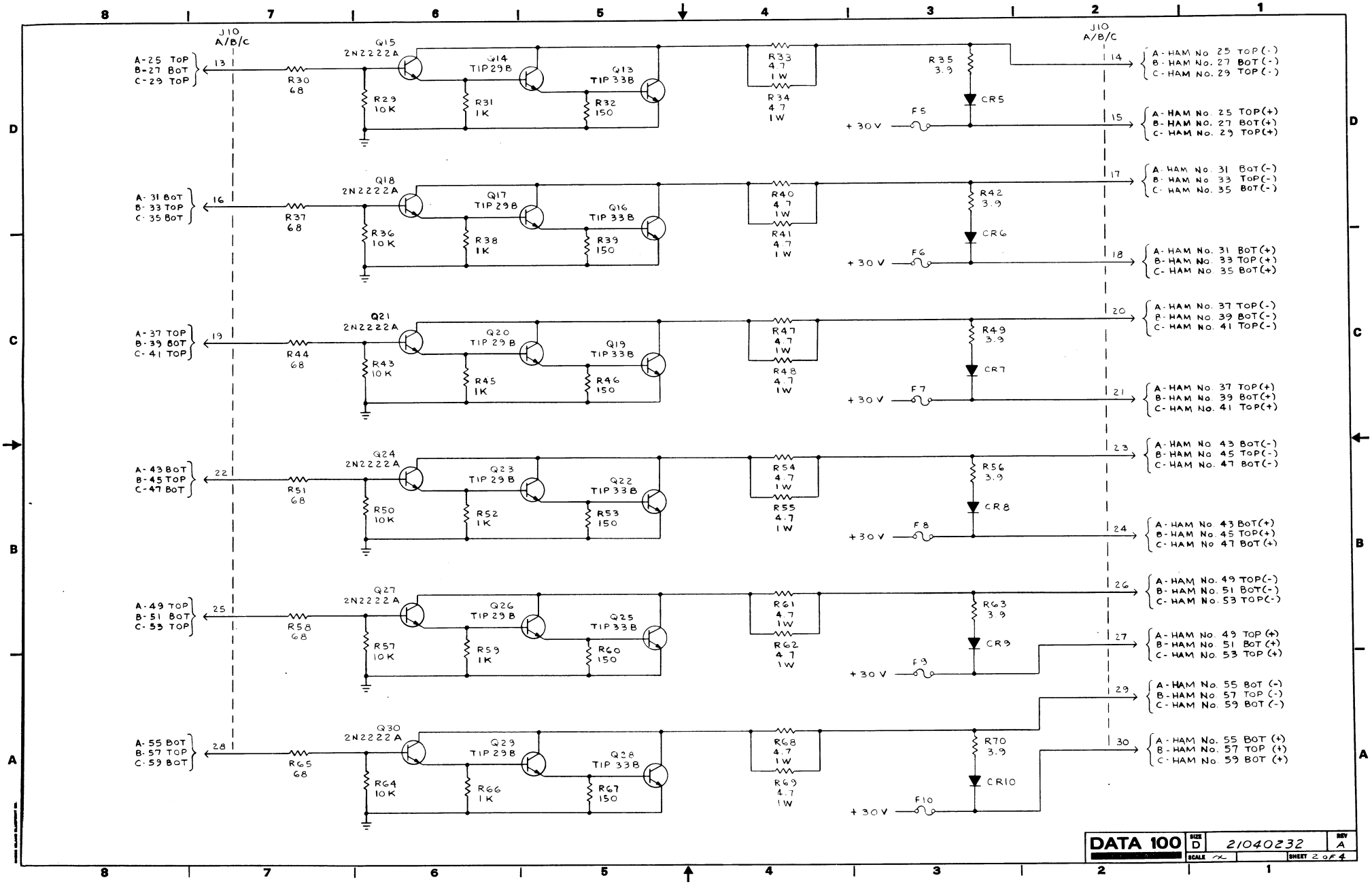
J10 A/B/C
A-25 TOP
B-27 BOT
C-29 TOP
13
R30 68
Q15 2N2222A
R29 10K
Q14 TIP29B
R31 1K
Q13 TIP33B
R32 150
R33 4.7 1W
R34 4.7 1W
R35 3.9
CR5
+30V
F5
14
A-HAM No. 25 TOP(-)
B-HAM No. 27 BOT(-)
C-HAM No. 29 TOP(-)
15
A-HAM No. 25 TOP(+)
B-HAM No. 27 BOT(+)
C-HAM No. 29 TOP(+)
A-31 BOT
B-33 TOP
C-35 BOT
16
R37 68
Q18 2N2222A
R36 10K
Q17 TIP29B
R38 1K
Q16 TIP33B
R39 150
R40 4.7 1W
R41 4.7 1W
R42 3.9
CR6
+30V
F6
17
A-HAM No. 31 BOT(-)
B-HAM No. 33 TOP(-)
C-HAM No. 35 BOT(-)
18
A-HAM No. 31 BOT(+)
B-HAM No. 33 TOP(+)
C-HAM No. 35 BOT(+)
A-37 TOP
B-39 BOT
C-41 TOP
19
R44 68
Q21 2N2222A
R43 10K
Q20 TIP29B
R45 1K
Q19 TIP33B
R46 150
R47 4.7 1W
R48 4.7 1W
R49 3.9
CR7
+30V
F7
20
A-HAM No. 37 TOP(-)
B-HAM No. 39 BOT(-)
C-HAM No. 41 TOP(-)
21
A-HAM No. 37 TOP(+)
B-HAM No. 39 BOT(+)
C-HAM No. 41 TOP(+)
A-43 BOT
B-45 TOP
C-47 BOT
22
R51 68
Q24 2N2222A
R50 10K
Q23 TIP29B
R52 1K
Q22 TIP33B
R53 150
R54 4.7 1W
R55 4.7 1W
R56 3.9
CR8
+30V
F8
23
A-HAM No 43 BOT(-)
B-HAM No 45 TOP(-)
C-HAM No. 47 BOT(-)
24
A-HAM No 43 BOT(+)
B-HAM No 45 TOP(+)
C-HAM No 47 BOT(+)
A-49 TOP
B-51 BOT
C-53 TOP
25
R58 68
Q27 2N2222A
R57 10K
Q26 TIP29B
R59 1K
Q25 TIP33B
R60 150
R61 4.7 1W
R62 4.7 1W
R63 3.9
CR9
+30V
F9
26
A-HAM No. 49 TOP(-)
B-HAM No. 51 BOT(-)
C-HAM No. 53 TOP(-)
27
A-HAM No. 49 TOP (+)
B-HAM No. 51 BOT (+)
C-HAM No. 53 TOP (+)
29
A-HAM No. 55 BOT (-)
B-HAM No. 57 TOP (-)
C-HAM No. 59 BOT (-)
A-55 BOT
B-57 TOP
C-59 BOT
28
R65 68
Q30 2N2222A
R64 10K
Q29 TIP29B
R66 1K
Q28 TIP33B
R67 150
R68 4.7 1W
R69 4.7 1W
R70 3.9
CR10
+30V
F10
30
A-HAM No. 55 BOT (+)
B-HAM No. 57 TOP (+)
C-HAM No. 59 BOT (+)
DATA 100
SIZE D
21040232
REV A
SCALE ~
SHEET 2 OF 4

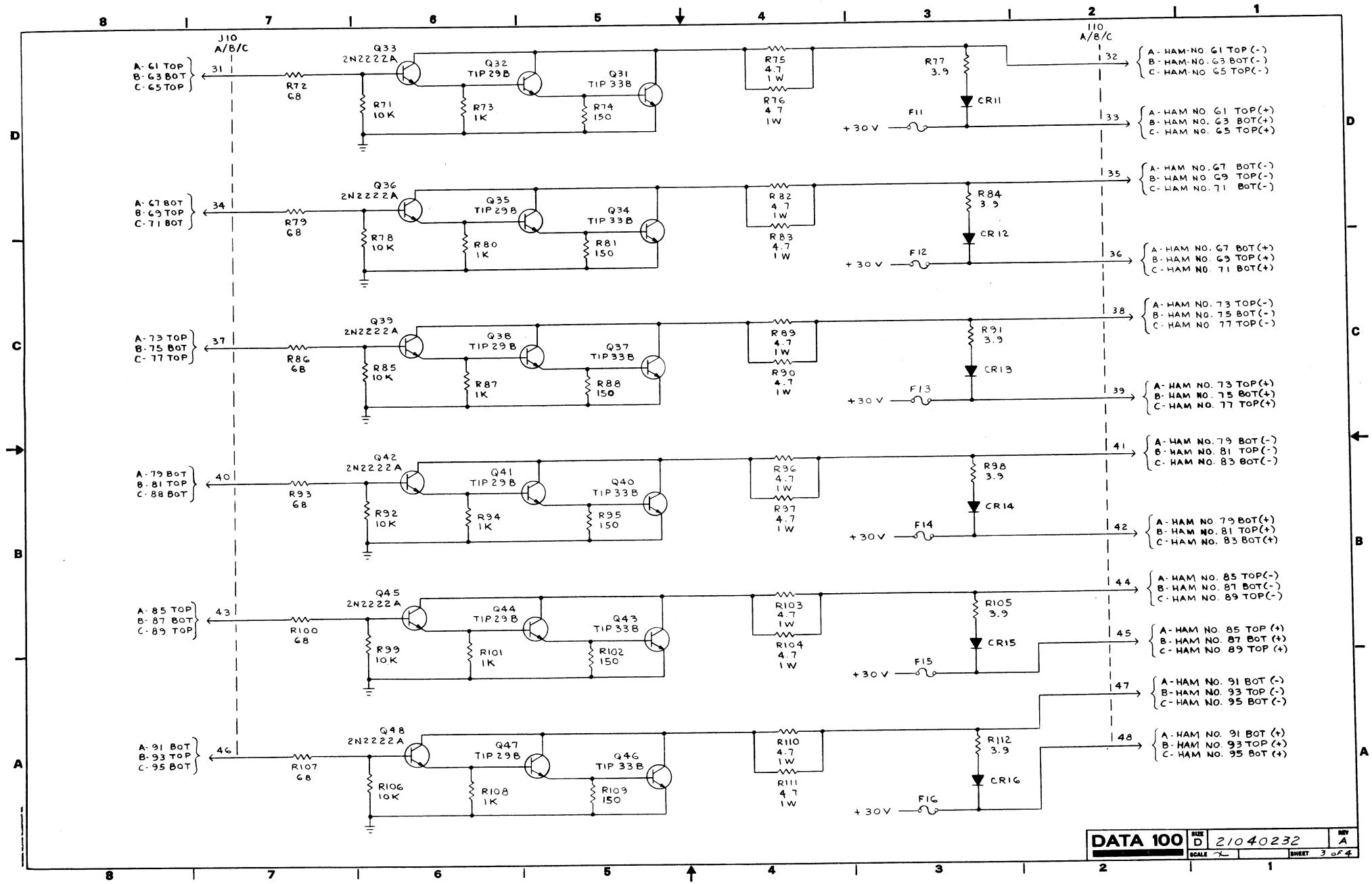
J10 A/B/C
110 A/B/C
A-61 TOP B-63 BOT C-65 TOP
31
R72 68
Q33 2N2222A
R71 10K
Q32 TIP29B
R73 1K
Q31 TIP33B
R74 150
R75 4.7 1W
R76 4.7 1W
R77 3.9
CR11
F11
+30V
32
A-HAM NO. 61 TOP(-)
B-HAM NO. 63 BOT(-)
C-HAM NO 65 TOP(-)
33
A-HAM NO. 61 TOP(+)
B-HAM NO. 63 BOT(+)
C-HAM NO. 65 TOP(+)
A-67 BOT B-69 TOP C-71 BOT
34
R79 68
Q36 2N2222A
R78 10K
Q35 TIP29B
R80 1K
Q34 TIP33B
R81 150
R82 4.7 1W
R83 4.7 1W
R84 3.9
CR12
F12
+30V
35
A-HAM NO. 67 BOT(-)
B-HAM NO 69 TOP(-)
C-HAM NO. 71 BOT(-)
36
A-HAM NO. 67 BOT(+)
B-HAM NO. 69 TOP(+)
C-HAM NO. 71 BOT(+)
A-73 TOP B-75 BOT C-77 TOP
37
R86 68
Q39 2N2222A
R85 10K
Q38 TIP29B
R87 1K
Q37 TIP33B
R88 150
R89 4.7 1W
R90 4.7 1W
R91 3.9
CR13
F13
+30V
38
A-HAM NO. 73 TOP(-)
B-HAM NO. 75 BOT(-)
C-HAM NO 77 TOP(-)
39
A-HAM NO. 73 TOP(+)
B-HAM NO. 75 BOT(+)
C-HAM NO. 77 TOP(+)
A-79 BOT B-81 TOP C-88 BOT
40
R93 68
Q42 2N2222A
R92 10K
Q41 TIP29B
R94 1K
Q40 TIP33B
R95 150
R96 4.7 1W
R97 4.7 1W
R98 3.9
CR14
F14
+30V
41
A-HAM NO. 79 BOT(-)
B-HAM NO. 81 TOP(-)
C-HAM NO. 83 BOT(-)
42
A-HAM NO 79 BOT(+)
B-HAM NO. 81 TOP(+)
C-HAM NO. 83 BOT(+)
A-85 TOP B-87 BOT C-89 TOP
43
R100 68
Q45 2N2222A
R99 10K
Q44 TIP29B
R101 1K
Q43 TIP33B
R102 150
R103 4.7 1W
R104 4.7 1W
R105 3.9
CR15
F15
+30V
44
A-HAM NO. 85 TOP(-)
B-HAM NO. 87 BOT(-)
C-HAM NO. 89 TOP(-)
45
A-HAM NO. 85 TOP (+)
B-HAM NO. 87 BOT (+)
C-HAM NO. 89 TOP (+)
47
A-HAM NO. 91 BOT (-)
B-HAM NO. 93 TOP (-)
C-HAM NO. 95 BOT (-)
A-91 BOT B-93 TOP C-95 BOT
46
R107 68
Q48 2N2222A
R106 10K
Q47 TIP29B
R108 1K
Q46 TIP33B
R109 150
R110 4.7 1W
R111 4.7 1W
R112 3.9
CR16
F16
+30V
48
A-HAM NO. 91 BOT (+)
B-HAM NO. 93 TOP (+)
C-HAM NO. 95 BOT (+)
DATA 100
SIZE D
21040232
REV A
SCALE
SHEET 3 of 4

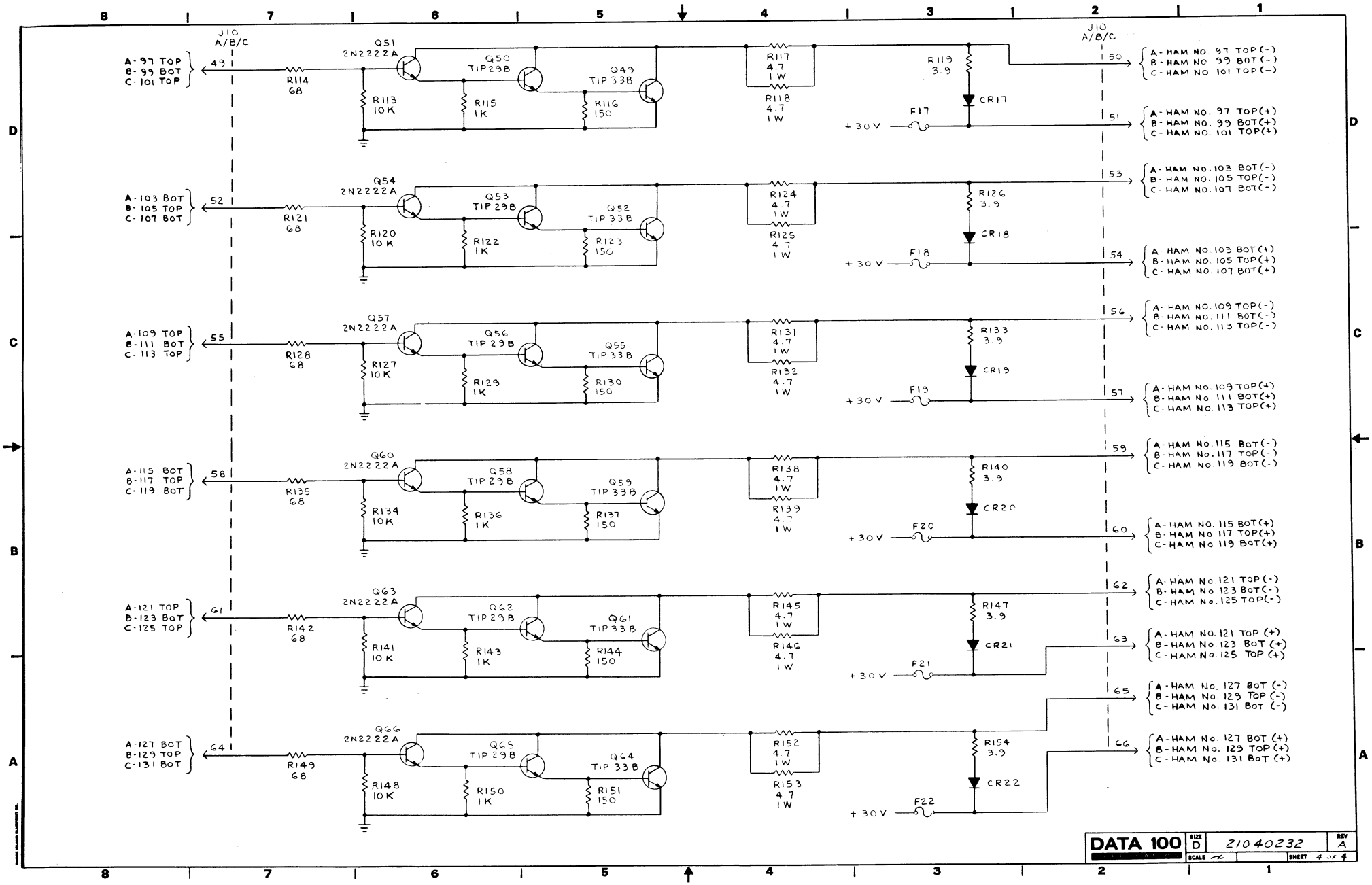
J10 A/B/C
A-97 TOP
B-99 BOT
C-101 TOP
49
R114 68
Q51 2N2222A
R113 10K
Q50 TIP29B
R115 1K
Q49 TIP33B
R116 150
R117 4.7 1W
R118 4.7 1W
R119 3.9
CR17
F17
+30V
50
A-HAM NO. 97 TOP(-)
B-HAM NO 99 BOT(-)
C-HAM NO 101 TOP(-)
51
A-HAM NO. 97 TOP(+)
B-HAM NO. 99 BOT(+)
C-HAM NO. 101 TOP(+)
A-103 BOT
B-105 TOP
C-107 BOT
52
R121 68
Q54 2N2222A
R120 10K
Q53 TIP29B
R122 1K
Q52 TIP33B
R123 150
R124 4.7 1W
R125 4.7 1W
R126 3.9
CR18
F18
+30V
53
A-HAM NO.103 BOT(-)
B-HAM NO. 105 TOP(-)
C-HAM NO. 107 BOT(-)
54
A-HAM NO 103 BOT(+)
B-HAM NO. 105 TOP(+)
C-HAM NO. 107 BOT(+)
A-109 TOP
B-111 BOT
C-113 TOP
55
R128 68
Q57 2N2222A
R127 10K
Q56 TIP29B
R129 1K
Q55 TIP33B
R130 150
R131 4.7 1W
R132 4.7 1W
R133 3.9
CR19
F19
+30V
56
A-HAM NO.109 TOP(-)
B-HAM NO. 111 BOT(-)
C-HAM NO. 113 TOP(-)
57
A-HAM NO. 109 TOP(+)
B-HAM No. 111 BOT(+)
C-HAM No. 113 TOP(+)
A-115 BOT
B-117 TOP
C-119 BOT
58
R135 68
Q60 2N2222A
R134 10K
Q58 TIP29B
R136 1K
Q59 TIP33B
R137 150
R138 4.7 1W
R139 4.7 1W
R140 3.9
CR20
F20
+30V
59
A-HAM NO.115 BOT(-)
B-HAM No.117 TOP(-)
C-HAM No 119 BOT(-)
60
A-HAM NO. 115 BOT(+)
B-HAM No 117 TOP(+)
C-HAM No 119 BOT(+)
A-121 TOP
B-123 BOT
C-125 TOP
61
R142 68
Q63 2N2222A
R141 10 K
Q62 TIP29B
R143 1K
Q61 TIP33B
R144 150
R145 4.7 1W
R146 4.7 1W
R147 3.9
CR21
F21
+30V
62
A-HAM No.121 TOP(-)
B-HAM No.123 BOT(-)
C-HAM No.125 TOP(-)
63
A-HAM NO. 121 TOP (+)
B-HAM No.123 BOT (+)
C-HAM No.125 TOP (+)
65
A-HAM No. 127 BOT (-)
B-HAM No 129 TOP (-)
C-HAM No. 131 BOT (-)
A-127 BOT
B-129 TOP
C-131 BOT
64
R149 68
Q66 2N2222A
R148 10K
Q65 TIP29B
R150 1K
Q64 TIP33B
R151 150
R152 4.7 1W
R153 4.7 1W
R154 3.9
CR22
F22
+30V
66
A-HAM No. 127 BOT (+)
B-HAM No. 129 TOP (+)
C-HAM No. 131 BOT (+)
DATA 100
SIZE D
21040232
REV A
SCALE ~
SHEET 4 OF 4

DATA 100 CONFIDENTIAL INFORMATION
This drawing is the Confidential, Proprietary Property of DATA 100 and includes trade secret information. It is to be used for its purpose when that the intended purpose for which it is delivered and is not to be used by or disclosed to any other individual or legal entity without the express written authorization of a representative of DATA 100.

| REVISIONS | | | | | |
|---|---|---|---|---|---|
| REV. | ECO. | DESCRIPTION | ORIG. | DATE | APPD. |
| A | 0 | DRN DR00218 | [illegible] | 5/4/77 | [illegible] |
| | DR0077 | SEE ECO | | | |

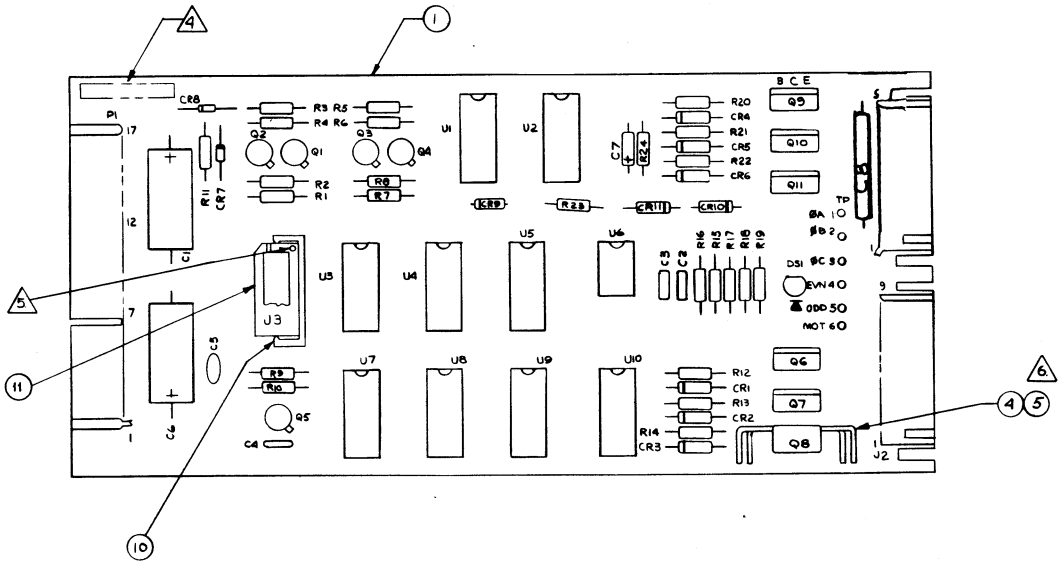


6. APPLY ITEM 50 BETWEEN MTG BASE OF SEMI CONDUCTOR COMPONENT AND HEAT SINK.
5. APPLY EPOXY TO CAVITY #14 OF SOCKET ITEM 11.

4. RUBBER STAMP PROGRAMMED BOARD P/N & REV. APPROXIMATELY AS SHOWN.

3. MAX. COMPONENT HEIGHT IS .94 IN. HIGH.
2. FOR MASTER LOGIC/SCHEMATIC SEE DRAWING 21040370.
1. FOR ASSEMBLY PROCEDURE SEE DATA 100 SPEC 21100010.

NOTES:

FOR PARTS LIST SEE SHEETS 2-4

| ITEM | PART NO | QTY | DESCRIPTION |
|---|---|---|---|

DATA 100

TITLE: P.W. BOARD ASSY, PA/ADV-HAM BAR DR

| | | |
|---|---|---|
| DRAWN | FPR | 9-18-73 |
| CHECKED | [illegible] | 5/4/77 |
| APPROVED | [illegible] | 5/4/77 |
| | [illegible] | 5/4/77 |
| | [illegible] | 5/4/77 |
| | [illegible] | 5/4/77 |

DOCUMENT NUMBER: 81040370 — SIZE: D — REV: B

DO NOT SCALE PRINT — SCALE 2/1 — SHEET 1 OF 4

TOLERANCE UNLESS OTHERWISE SPECIFIED: .3 PLACE .2 PLACE ANGLES

310223-G1

PAPER ADVANCE AND HAMMER BAR DRIVE

| PART Nº | DESCRIPTION |
|---|---|
| 66040370 | PW Board Assy., Paper Advance and Hammer Bar Drive (PA/HBD); bare board |
| 52253045 | Capacitor, .01ufd,200v |
| 52252265 | Capacitor, .05ufd, 12v |
| 52253099 | Capacitor, .1ufd, 50v |
| 52164170 | Capacitor, .33ufd, 80v |
| 52325062 | Capacitor, 6.8ufd, 6v, 10% |
| 52315500 | Capacitor, 200ufd, 6v |
| 62021149 | Clip, Heat Sink |
| 32611110 | Compound, heat transfer; insulating (Heat Sink) |
| 51631003 | Diode, small-signal; type 1N914B |
| 51633000 | Diode, small-signal, type 1N4001 |
| 51611901 | Diode, light-emitting (LED); DIALCO 521-9165 |
| 51622139 | Diode, Zener; type1N4739B, 9.1v |
| 51622143 | Diode, Zener; type 1N4743B, 13v |
| 56172101 | Fastener, Dip-Lock® |
| 62021150 | Heat Sink |
| 51320000 | I.C., type 7400 |
| 51320001 | I.C., type 7402 |
| 51320002 | I.C., type 7404 |
| 51320032 | I.C., type 7413 |
| 51320019 | I.C., type 7474 |
| 51421010 | I.C., (Timer) type NE/SE555V |

PAPER ADVANCE AND HAMMER BAR DRIVE

| PART № | DESCRIPTION |
|---|---|
| 54400085 | Resistor, 68 ohm, 1/4W, 5% |
| 54400261 | Resistor, 100 ohm, 1/4W, 5% |
| 54400273 | Resistor, 330 ohm, 1/4W, 5% |
| 54400285 | Resistor, 1K, 1/4W, 5% |
| 54400481 | Resistor, 10K, 1/4W, 5% |
| 54400483 | Resistor, 12K, 1/4W, 5% |
| 56172100 | Socket, 14-Pin DIP (solder-type) |
| 56235320 | Terminal, disconnect |
| 51184225 | Transistor, type TIP 121 |
| 51122650 | Transistor, type 2N2222A |

DATA 100 CONFIDENTIAL INFORMATION

REVISIONS

| REV | ECO | DESCRIPTION | DRFT. | DATE | CHK'D |
|---|---|---|---|---|---|
| A | | DRN DR 30218 | | 6/8/77 | |

SHEET NUMBERS

| REVISION LEVEL | 1 | 2 | 3 | 4 | 5 | 6 | 7 | 8 | 9 | 10 | 11 | 12 | 13 | 14 | 15 | 16 | 17 | 18 | 19 | 20 | 21 | 22 | 23 | 24 | 25 | 26 | 27 | 28 | 29 | 30 | 31 | 32 | 33 | 34 | 35 | 36 | 37 | 38 | 39 | 40 | 41 | 42 | 43 | 44 | 45 | 46 | 47 | 48 | 49 | 50 |
|---|---|---|---|---|---|---|---|---|---|---|---|---|---|---|---|---|---|---|---|---|---|---|---|---|---|---|---|---|---|---|---|---|---|---|---|---|---|---|---|---|---|---|---|---|---|---|---|---|---|---|
| | A | A | A | | | | | | | | | | | | | | | | | | | | | | | | | | | | | | | | | | | | | | | | | | | | | | | | |

4. CONNECTOR PIN CONFIGURATION IS AS FOLLOWS:
W - WIRING SIDE
C - COMPONENT SIDE

3. AREA INDICATED IS FOR ASSY 81040370 ONLY

2. EXAMPLE OF ZONE AND TAG LINES;

A 3 - A2

SHEET NO. — ZONE

1. UNLESS OTHERWISE SPECIFIED;
ALL RESISTORS ARE IN OHMS; ±5%; 1/4W
ALL CAPACITORS ARE IN MICROFARADS

NOTES:

| | | | |
|---|---|---|---|
| DATA 100 | TITLE: BOARD SCHEMATIC PA/ADV & HAM BAR DR | | |
| ORIGINATOR | 9-20-73 | | |
| APPROVAL | 5/9/77 | | |
| APPROVAL | 5/9/77 | SIZE D | DOCUMENT NUMBER 21040370 — REV. A |
| | 5/9/77 | | |
| | 6/8/77 | | |
| DR | | SCALE NONE | SHEET 1 OF 3 — PAGE |

610089-D 610193-A

| I.C. | REF. DES. | SPARE GATES |
|---|---|---|
| | | NONE |
| | | |

| POWER DISTRIBUTION FOR I.C.'S | | |
|---|---|---|
| REF. DESIGNATIONS | +5 | GND |
| U1 THRU U5, U7 THRU U10 | 14 | 7 |
| U6 | 8 | 1 |
| | | |

| HIGHEST REF. DES. | REF. DES. NOT USED |
|---|---|
| C8 | — |
| CR11 | — |
| DS1 | — |
| Q11 | — |
| R24 | — |
| U10 | — |
| G | — |

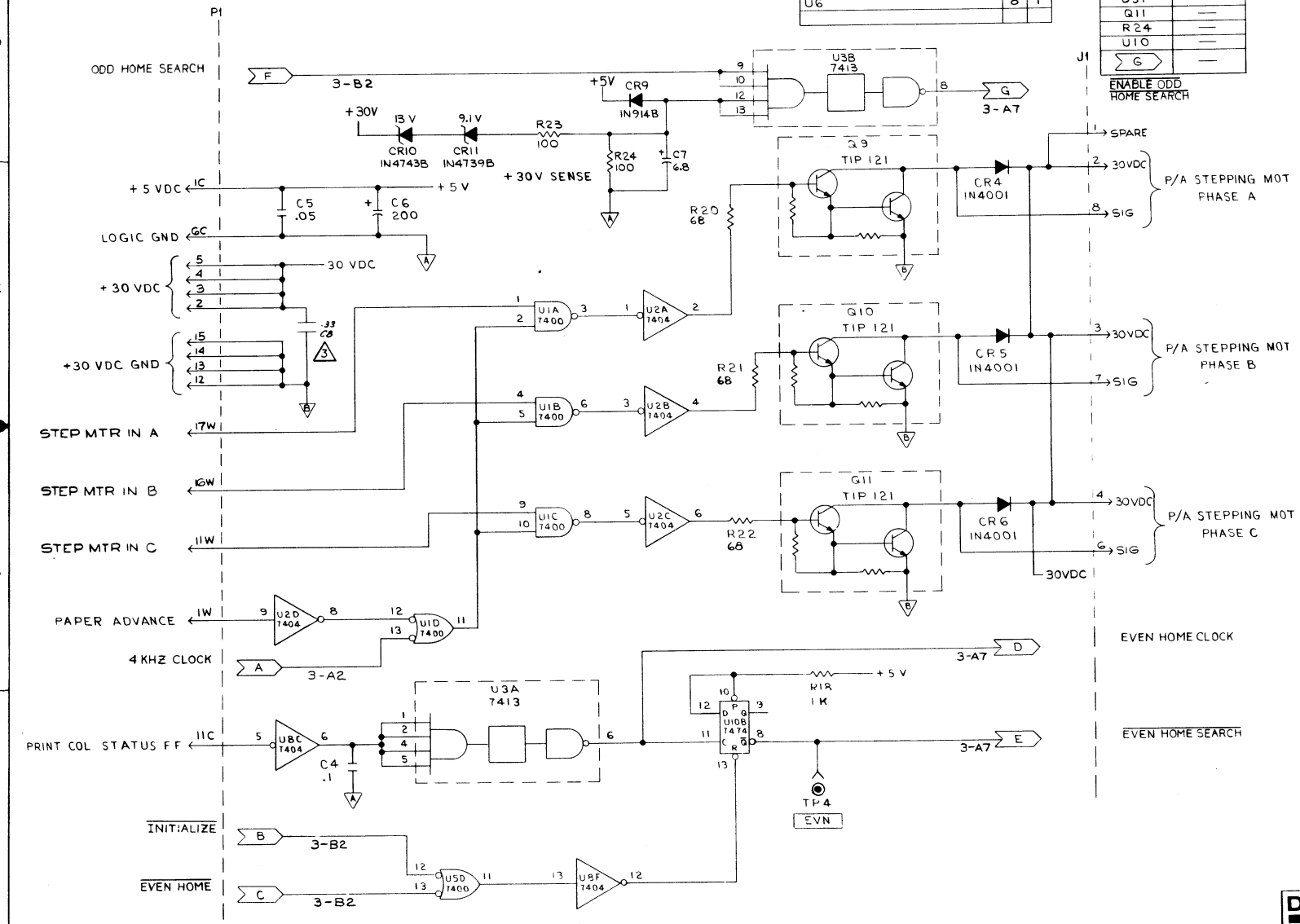


DATA 100 | SIZE D | 21040370 | REV | SCALE NONE | 2 OF 3 | SHEET

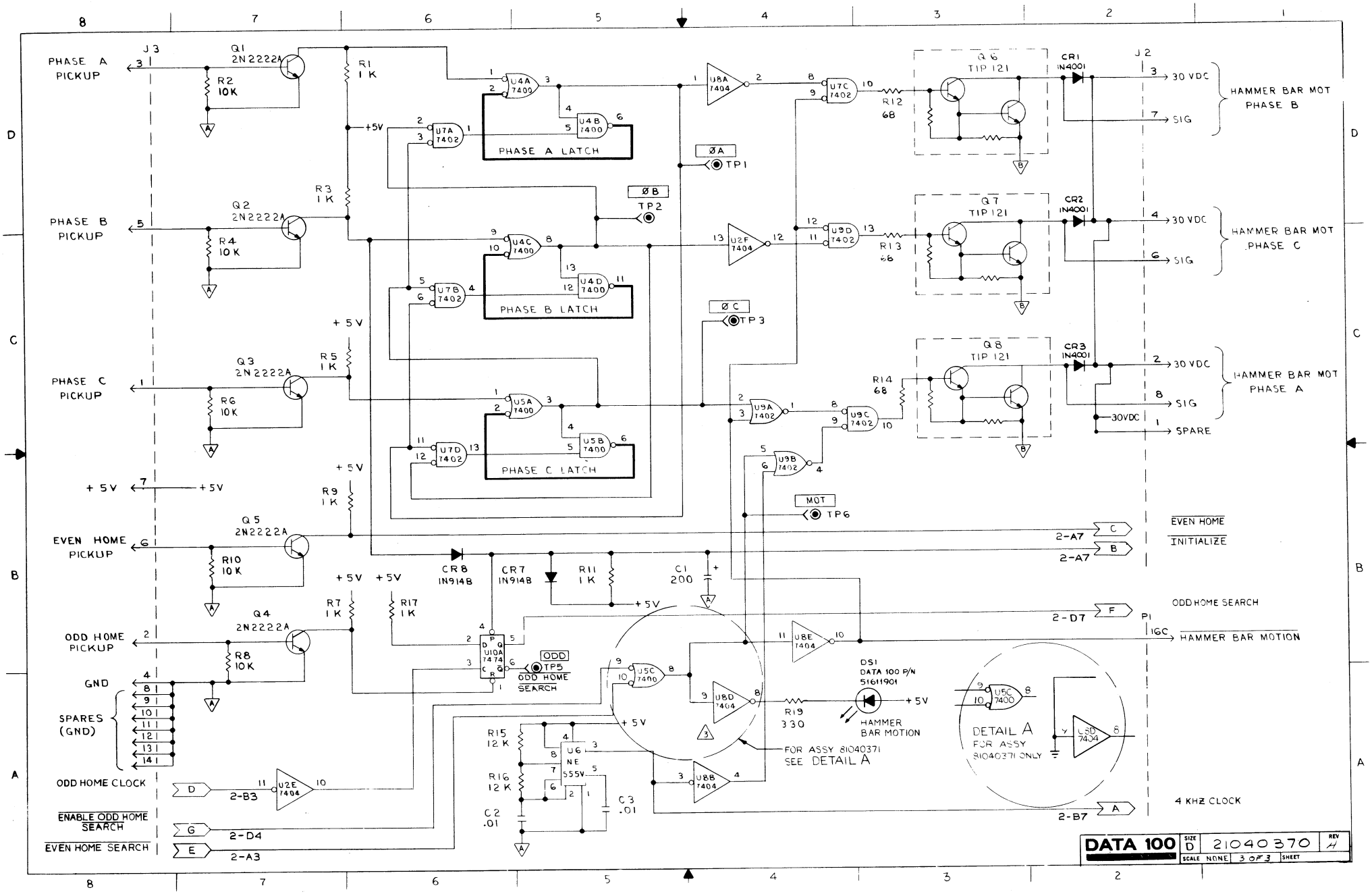
PHASE A PICKUP
PHASE B PICKUP
PHASE C PICKUP
EVEN HOME PICKUP
ODD HOME PICKUP
GND
SPARES (GND)
ODD HOME CLOCK
ENABLE ODD HOME SEARCH
EVEN HOME SEARCH
J3
Q1 2N2222A
Q2 2N2222A
Q3 2N2222A
Q5 2N2222A
Q4 2N2222A
R1 1K
R2 10K
R3 1K
R4 10K
R5 1K
R6 10K
R7 1K
R8 10K
R9 1K
R10 10K
R11 1K
R12 68
R13 66
R14 68
R15 12K
R16 12K
R17 1K
R19 330
C1 200
C2 .01
C3 .01
CR8 1N914B
CR7 1N914B
CR1 1N4001
CR2 1N4001
CR3 1N4001
Q6 TIP 121
Q7 TIP 121
Q8 TIP 121
U4A 7400
U4B 7400
U4C 7400
U4D 7400
U5A 7400
U5B 7400
U7A 7402
U7B 7402
U7D 7402
U7C 7402
U9D 7402
U9A 7402
U9C 7402
U9B 7402
U8A 7404
U2F 7404
U8E 7404
U8D 7404
U8B 7404
U2E 7404
U5C 7400
U5D 7404
U10A 7474
U6 NE 555V
PHASE A LATCH
PHASE B LATCH
PHASE C LATCH
ØA
ØB
ØC
TP1
TP2
TP3
MOT
TP6
ODD
TP5
ODD HOME SEARCH
DS1 DATA 100 P/N 51611901
HAMMER BAR MOTION
FOR ASSY 81040371 SEE DETAIL A
DETAIL A FOR ASSY 81040371 ONLY
J2
30 VDC
SIG
SPARE
HAMMER BAR MOT PHASE B
HAMMER BAR MOT PHASE C
HAMMER BAR MOT PHASE A
EVEN HOME INITIALIZE
ODD HOME SEARCH
HAMMER BAR MOTION
4 KHZ CLOCK
2-A7
2-D7
2-B3
2-D4
2-A3
2-B7
DATA 100
SIZE D
21040370
REV H
SCALE NONE
3 OF 3
SHEET

DATA 100 CONFIDENTIAL INFORMATION
This drawing is the Confidential Proprietary Property of DATA 100 and includes trade secret information. It is to be used for no purpose other than the limited purpose for which it is delivered and is not to be used by or disclosed to any other individual or legal entity without the express written authorization of a representative of DATA 100.

REVISIONS

| ECO | SYM | DESCRIPTION | DRN | DATE | APPROVED |
|---|---|---|---|---|---|
| -0 | A | DRN DR 00 | B.W. | | |

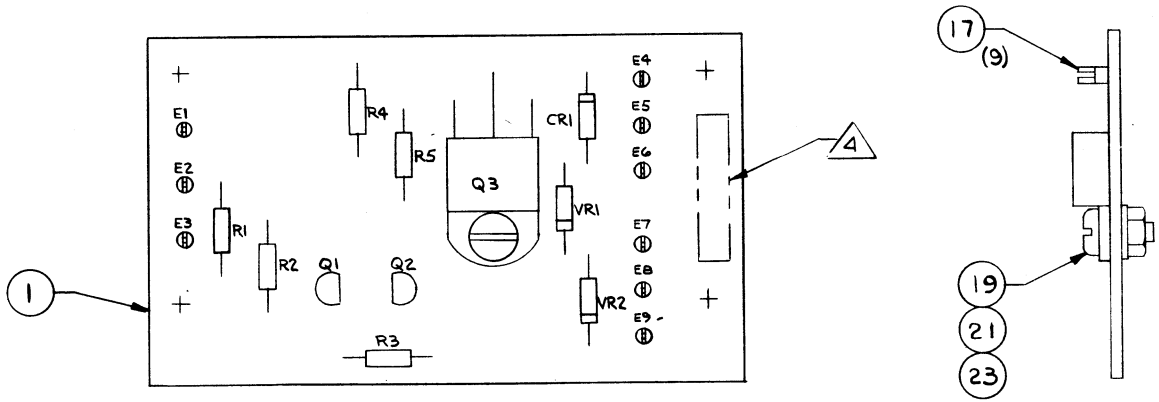


FOR PARTS LIST SEE SHEET 2

4 RUBBER STAMP BOARD P/N AND REV. LEVEL APPROXIMATELY AS SHOWN.

3. MAX. COMPONENT HEIGHT IS .31 IN. HIGH.

2. FOR MASTER LOGIC/SCHEMATIC SEE DRAWING 21040410.

1. FOR ASSEMBLY PROCEDURE SEE DATA 100 SPEC 21100010.

NOTES:

UNLESS OTHERWISE SPECIFIED DIMENSIONS ARE IN INCHES TOLERANCES ON DECIMALS: .X ± .XX ± .XXX ± ANGLES: ± FRACTIONS: ±

MATERIAL

FINISH

DR. B. WEBSTER 1-27-78

CHK

APPD

DR

DATA 100 CORPORATION

BOARD ASSY PAPER CLAMP

SIZE C | 81040410 | REV A

SCALE 2:1 | 1 OF 2 | SHEET 1 OF 2

310256-A1

PAPER CLAMP BOARD ASSEMBLY

| PART № | DESCRIPTION |
|---|---|
| 54400085 | Resistor, 68 Ohms, 1/4W, 5% |
| 54400261 | Resistor, 100 Ohms, 1/4W, 5% |
| 54400473 | Resistor, 4.7K Ohms, 1/4W, 5% |
| 54400481 | Resistor, 10K Ohms, 1/4W, 5% |
| 51633000 | Diode, 1N4001 |
| 51622143 | Diode, Zener, 1N4743 |
| 51122330 | Transistor, A5T2222 or 2N5369 |
| 51187250 | Transistor, TIP146 |

| REVISIONS | | | | |
|---|---|---|---|---|
| REV | ECO | DESCRIPTION | DATE | APPROVED |
| A | | DRN DR00562 | C.S. 1/30/78 | T.H. |

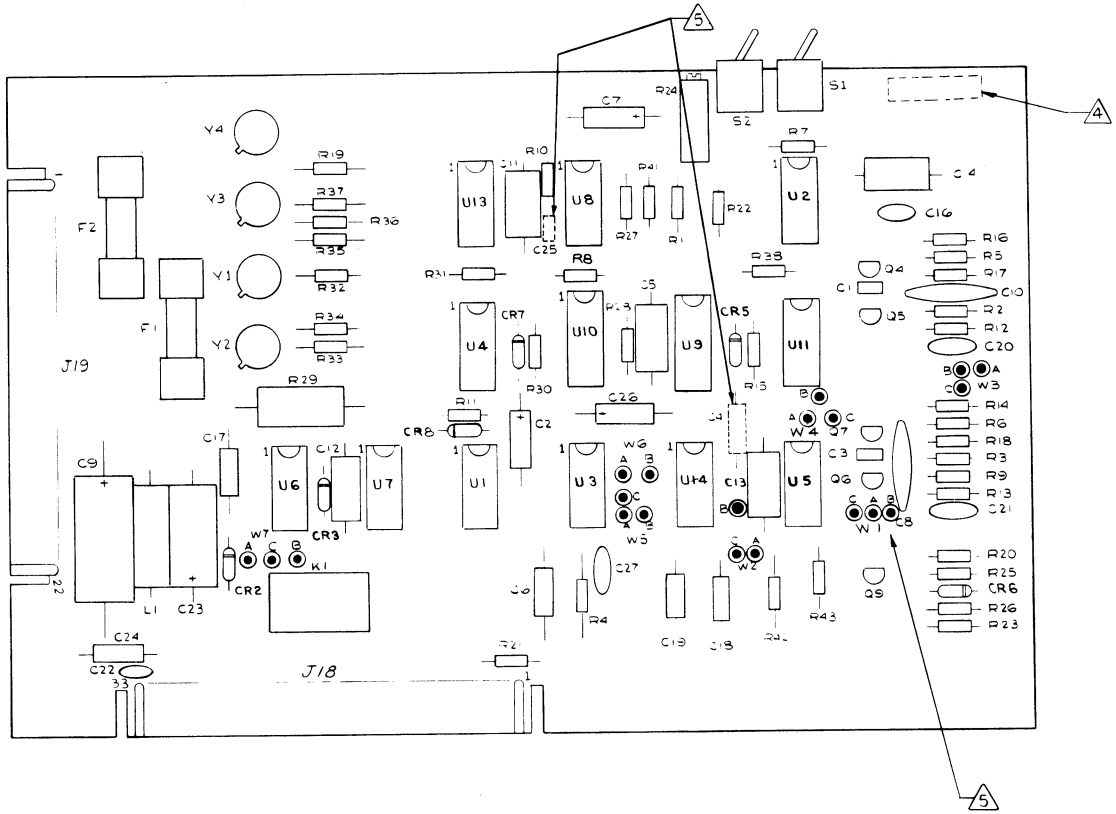


| CONFIGURATION CHART 5 | | | | | | | | | | |
|---|---|---|---|---|---|---|---|---|---|---|
| PROGRAM TYPE | W1 | W2 | W3 | W4 | W6 | W7 | W8 | W9 | R39 | R40 |
| AMPLIFYING PICKUP W/FUSE ALARM | OPEN | A-B | OPEN | A-B | A-B | A-C | A-B | A-B | OPEN | OPEN |
| AMPLIFYING PICKUP W/O FUSE ALARM | OPEN | A-B | OPEN | A-B | A-B | A-C | A-B | A-B | OPEN | OPEN |
| AMPLIFYING PICKUP W/FUSE ALARM | OPEN | A-B | OPEN | A-B | A-B | A-C | A-B | A-B | OPEN | OPEN |
| AMPLIFYING PICKUP W/O FUSE ALARM | OPEN | A-B | OPEN | A-B | A-B | A-C | A-B | A-B | OPEN | OPEN |

NOTES:

1. FOR ASSEMBLY PROCEDURE SEE DATA 100 SPEC 21100010.
2. FOR MASTER LOGIC/SCHEMATIC SEE DRAWING 21040840.
3. MAX. COMPONENT HEIGHT IS .625 IN. HIGH.
4. RUBBER STAMP UNPROGRAMMED BOARD P/N APPROXIMATELY AS SHOWN.
5. FOR CONFIGURATION SPECIFICATION SEE 22284010.
6. INSTALL ALL JUMPERS USING WIRE ITEM NO. 72 APPROXIMATELY AS SHOWN.
7. FOR REWORK INSTRUCTIONS SEE SHEET 2.

| | | | |
|---|---|---|---|
| DATA 100 CORPORATION | AUXILIARY BOARD (UNPROGRAMMED) | | |
| C.S. 1/30/77 | DOCUMENT NUMBER 81040840 | | REV A |
| T. Cirelli 11-30-78 | | | |
| T. Hegarty 1/30/78 | | | |
| D R | DO NOT SCALE PRINT | SHEET 1 OF 6 | |
| | SCALE 2/1 | | |

310244-B 691038-B

P C.B. ASSEMBLY AUXILIARY BOARD

| PART № | DESCRIPTION |
|---|---|
| 52251515 | Capacitor, 100pf |
| 52251530 | Capacitor, 1000pf, 200WVDC |
| 52251530 | Capacitor, .001ufd, 200WVDC |
| 52132120 | Capacitor, .01ufd, Film, 80WVDC |
| 52252265 | Capacitor, .05ufd, ±10%, 12WVDC |
| 52253001 | Capacitor, .05ufd, 12WVDC |
| 52132110 | Capacitor, .1ufd, 80WVDC |
| 52132112 | Capacitor, .15ufd |
| 52252145 | Capacitor, .47ufd, Ceramic Disc, 3WVDC |
| 52252147 | Capacitor, 1ufd, 3WVDC |
| 52325127 | Capacitor, 40ufd |
| 52325138 | Capacitor, 100ufd, 10WVDC |
| 52316350 | Capacitor, 100ufd, 35WVDC |
| 52325091 | Capacitor, 150ufd, 6WVDC |
| 52315500 | Capacitor, 200ufd, 6WVDC |
| 53358000 | Choke, 27uH |
| 51631003 | Diode, 1N914B |
| 55238003 | Fuse, 1.5 AMP |
| 55611150 | Fuse Clips |
| 51320000 | I.C., 7400N |
| 51320002 | I.C., 7404N |
| 51320003 | I.C., 7410N |
| 51320019 | I.C., 7474N |

P.C.B. ASSEMBLY AUXILIARY BOARD

| PART № | DESCRIPTION |
|---|---|
| 51320940 | I.C. - 74122N |
| 51428000 | I.C. - 3059 |
| 51320941 | I.C. - 7413N |
| 51320023 | I.C. - 9602 |
| 51320013 | I.C. - 7437J |
| 54773676 | Potentiometer, 50K |
| 72310000 | Relay, Reed |
| 54400075 | Resistor, 27 Ohms, 1/4W |
| 54400261 | Resistor, 100 Ohms, 1/4W |
| 54400269 | Resistor, 220 Ohms, 1/4W |
| 54400271 | Resistor, 270 Ohms, 1/4W |
| 54400277 | Resistor, 470 Ohms, 1/4W |
| 54400281 | Resistor, 680 Ohms, 1/4W |
| 54400283 | Resistor, 820 Ohms, 1/4W |
| 54400285 | Resistor, 1K, 1/4W |
| 54400295 | Resistor, 2.7K, 1/4W |
| 54400299 | Resistor, 3.9K, 1/4W |
| 54400473 | Resistor, 4.7K, 1/4W |
| 54400475 | Resistor, 5.6K, 1/4W |
| 54400481 | Resistor, 18K, 1/4W |
| 54400487 | Resistor, 18K, 1/4W |
| 54400493 | Resistor, 33K, 1/4W |
| 54400497 | Resistor, 47K, 1/4W |
| 71621100 | Switch, Toggle (SPST) |

# PARTS LIST
P/N 81040840

P.C.B. ASSEMBLY AUXILIARY BOARD

| PART № | DESCRIPTION |
|---|---|
| 71621101 | Switch, Toggle (DPDT-MOM) |
| 51122330 | Transistor, GET 2222 |
| 51884000 | Triac, RCA 40526 |

| I.C. | REF. DES. | SPARE GATES |
|---|---|---|
| 7437 | U2 | B4,5,6 & D11,12,13 |
| 9602 | U10 | B9,10,11,12,13,14,15 |
| 7474 | U14 | B,8-13 |

| POWER DISTRIBUTION FOR I.C.'S | | |
|---|---|---|
| REF DESIGNATION | +5 | GND |
| U1-U8,U11,U13,U14 | 14 | 7 |
| U9,U10 | 16 | 8 |

| HIGHEST REF. DES. | REF. DES. NOT USED |
|---|---|
| C27 | C15 |
| CR8 | CR1,4 |
| K1 | — |
| F2 | — |
| Q9 | Q1,2,3,8 |
| R43 | — |
| S2 | — |
| U14 | U12 |
| Y4 | — |
| ∑C | — |
| L1 | — |

# CONFIGURATION CHART 3

| | PROGRAM TYPE | W1 | W2 | W3 | W4 | W5 | W6 | W7 | W8 | W9 | R39 | R40 | C4 | C25 |
|---|---|---|---|---|---|---|---|---|---|---|---|---|---|---|
| C030 | AMPLIFYING PICKUP W/FUSE ALARM | OPEN | A-B | OPEN | A-B | A-B | A-B | A-C | A-B | A-B | OPEN | OPEN | 47 | .01 |
| C031 | W/O FUSE ALARM | OPEN | A-B | OPEN | A-B | A-C | A-B | A-C | A-B | A-B | OPEN | OPEN | 47 | .01 |
| C032 | W/FUSE ALARM | OPEN | A-B | OPEN | A-B | A-C | A-B | A-C | A-B | A-B | OPEN | OPEN | 150 | .001 |
| C033 | W/O FUSE ALARM | OPEN | A-B | OPEN | A-B | A-C | A-B | A-C | A-B | A-B | OPEN | OPEN | 150 | .001 |

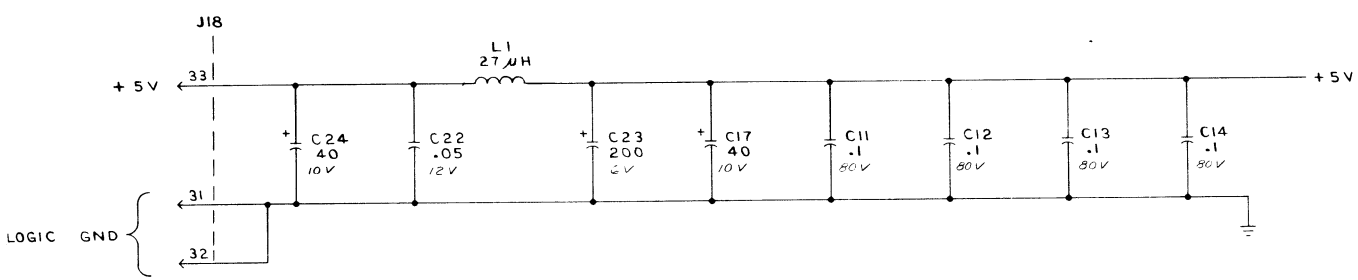


DATA 100 CORPORATION | SIZE D | 21040840 | REV A | SCALE | 2 OF 5 | SHEET

| REVISIONS | | | | | |
|---|---|---|---|---|---|
| REV | ECO | DESCRIPTION | DRFT. | DATE | CHK'D |
| A | — | DRN DR00562 | ES | 1/6/73 | TH |

SHEET NUMBERS

| 1 | 2 | 3 | 4 | 5 | 6 | 7 | 8 | 9 | 10 | 11 | 12 | 13 | 14 | 15 | 16 | 17 | 18 | 19 | 20 | 21 | 22 | 23 | 24 | 25 | 26 | 27 | 28 | 29 | 30 | 31 | 32 | 33 | 34 | 35 | 36 | 37 | 38 | 39 | 40 | 41 | 42 | 43 | 44 | 45 | 46 | 47 | 48 | 49 | 50 |
|---|---|---|---|---|---|---|---|---|---|---|---|---|---|---|---|---|---|---|---|---|---|---|---|---|---|---|---|---|---|---|---|---|---|---|---|---|---|---|---|---|---|---|---|---|---|---|---|---|---|
| A | A | A | A | A | | | | | | | | | | | | | | | | | | | | | | | | | | | | | | | | | | | | | | | | | | | | | |

REVISION LEVEL

3. FOR CONFIGURATION SPECIFICATION, SEE 22284010.

2. EXAMPLE OF ZONE AND TAG LINES;

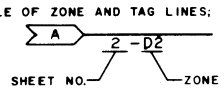


1. UNLESS OTHERWISE SPECIFIED;
ALL RESISTORS ARE IN OHMS; ±5%; 1/4W
ALL CAPACITORS ARE IN MICROFARADS

NOTES:

| | | | |
|---|---|---|---|
| DATA 100 | TITLE: LOGIC DIAGRAM AUXILIARY BOARD | | |
| ORIGINATOR E. Schell 6-22-72 | | | |
| APPROVAL | | | |
| APPROVAL | SIZE D | DOCUMENT NUMBER 21040840 | REV A |
| | SCALE — | SHEET 1 OF 5 | PAGE |

610037-J

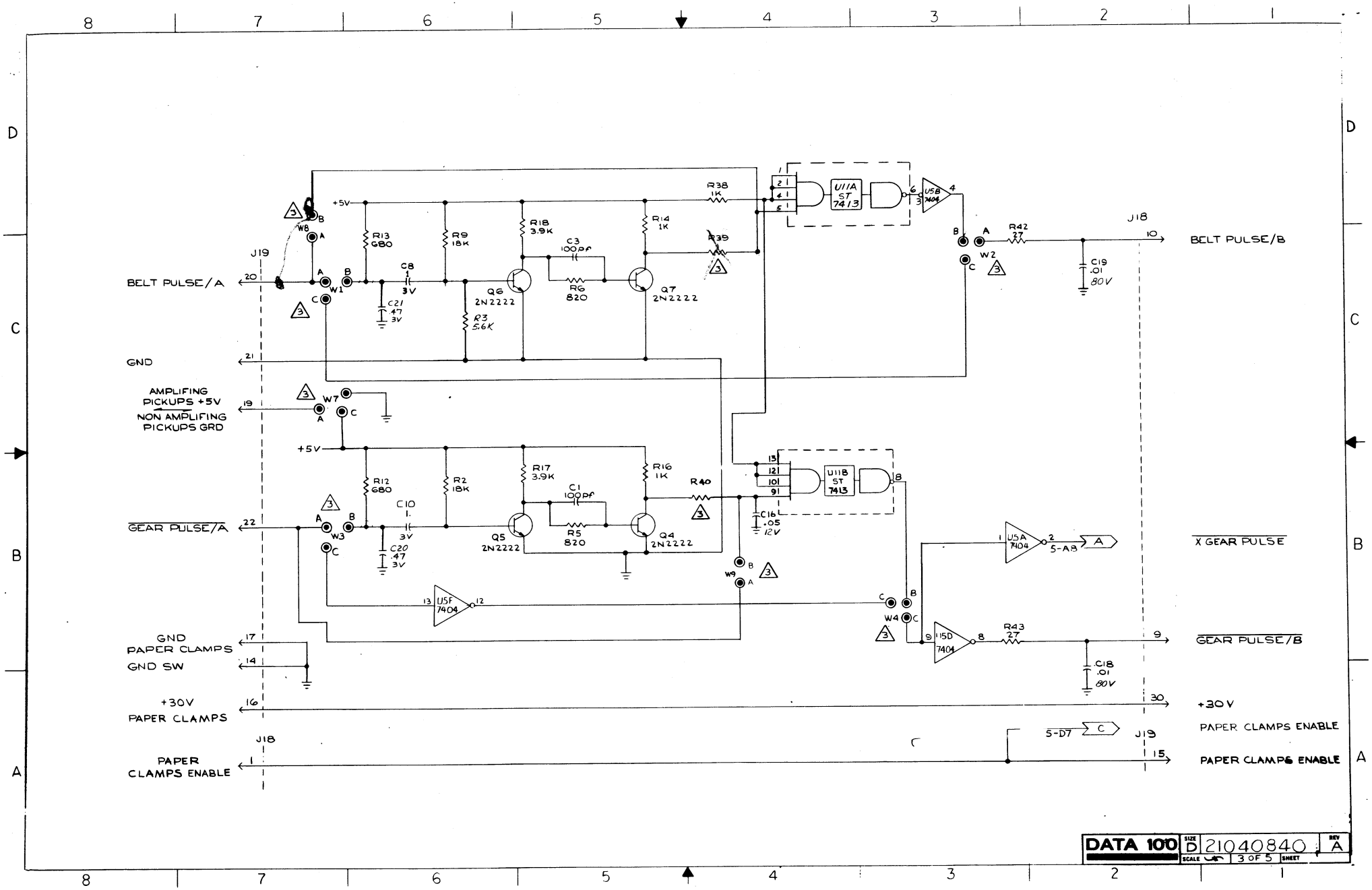


DATA 100 | SIZE D | 21040840 | REV A | SCALE | 3 OF 5 | SHEET

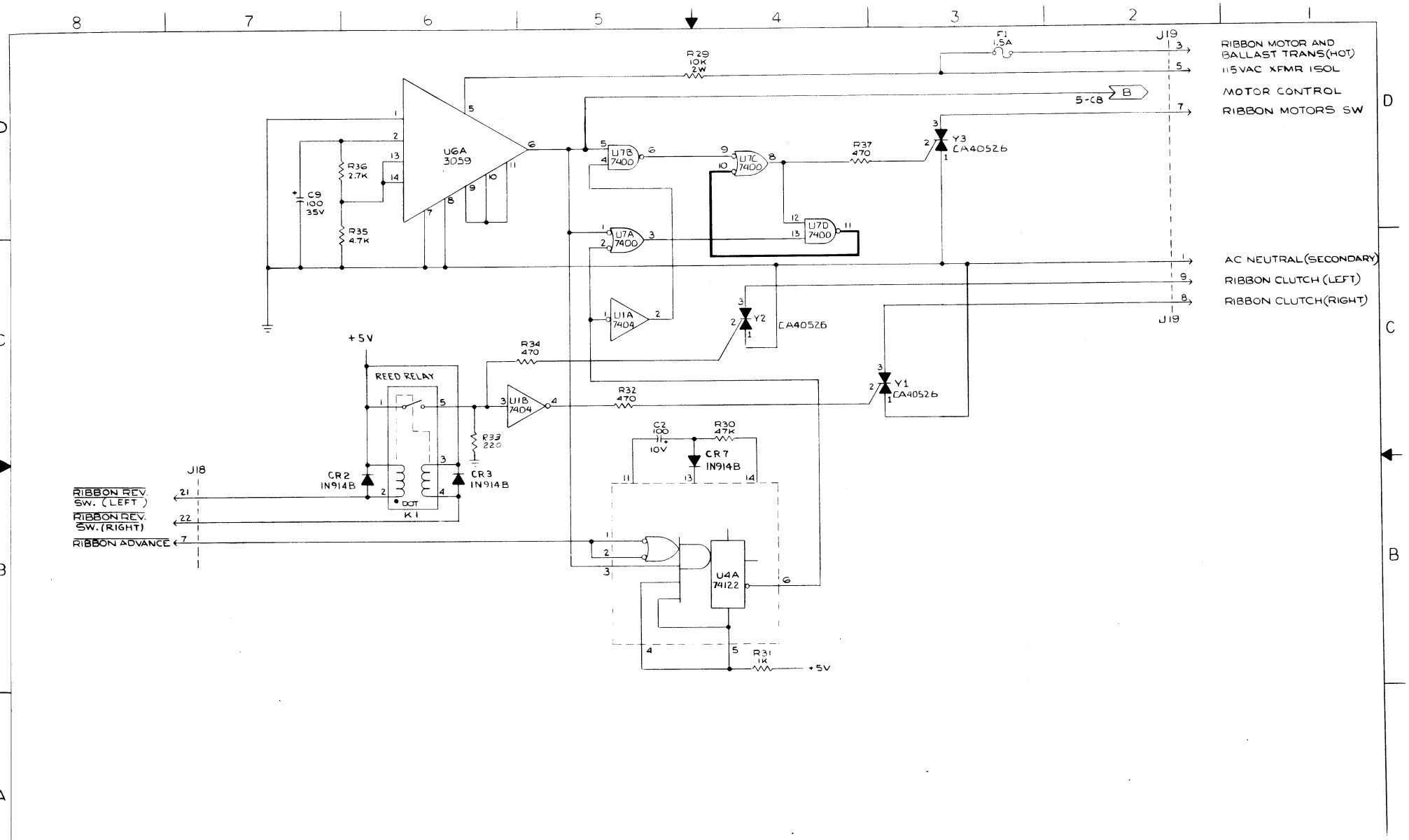


DATA 100 | SIZE D | 21040840 | REV A | SCALE | 4 OF 5 | SHEET

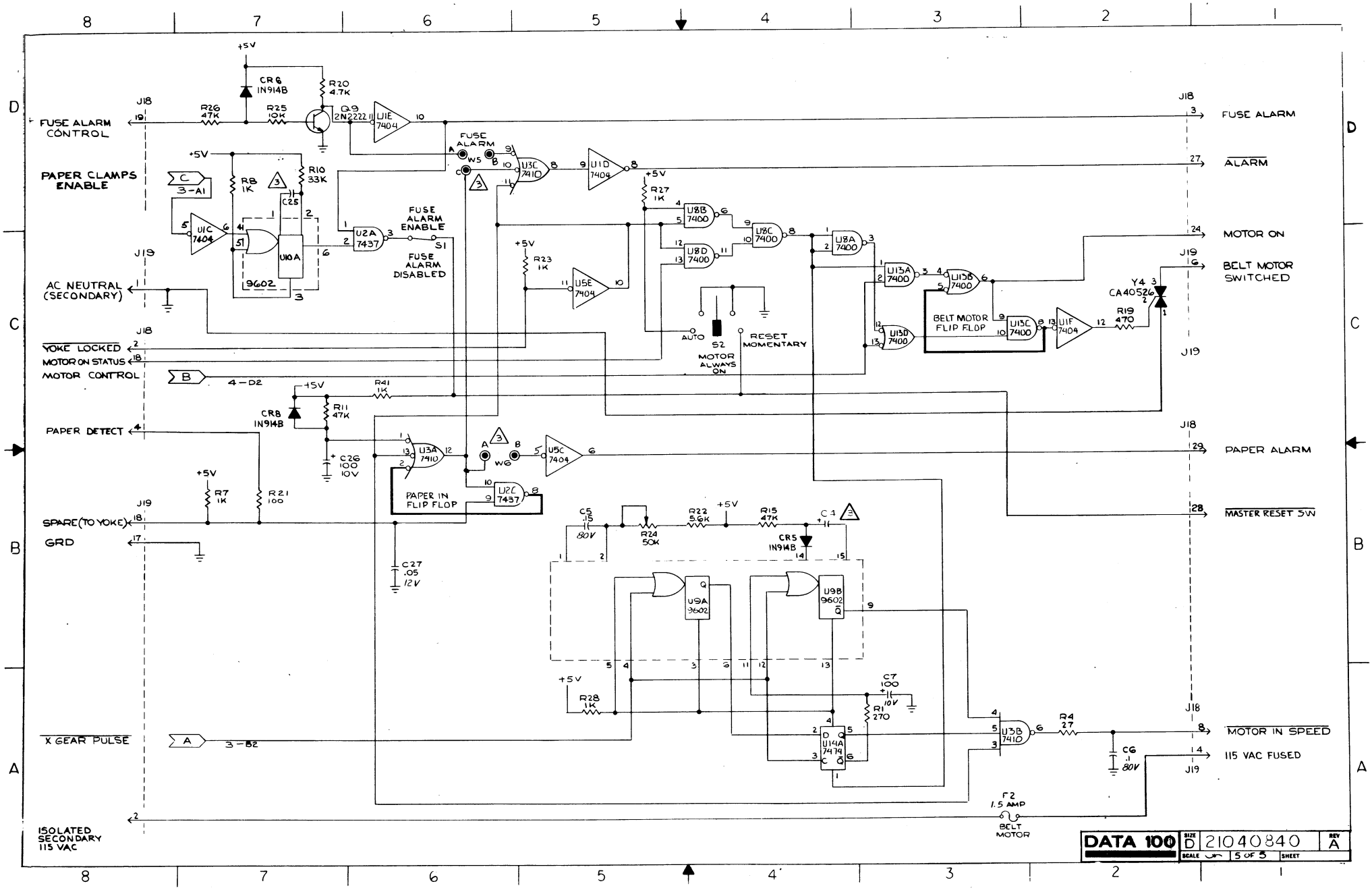
FUSE ALARM CONTROL
PAPER CLAMPS ENABLE
AC NEUTRAL (SECONDARY)
YOKE LOCKED
MOTOR ON STATUS
MOTOR CONTROL
PAPER DETECT
SPARE (TO YOKE)
GRD
X GEAR PULSE
ISOLATED SECONDARY 115 VAC
FUSE ALARM
ALARM
MOTOR ON
BELT MOTOR SWITCHED
PAPER ALARM
MASTER RESET SW
MOTOR IN SPEED
115 VAC FUSED
FUSE ALARM ENABLE
FUSE ALARM DISABLED
BELT MOTOR FLIP FLOP
PAPER IN FLIP FLOP
AUTO
RESET MOMENTARY
MOTOR ALWAYS ON
BELT MOTOR
F2 1.5 AMP
DATA 100
SIZE D
21040840
REV A
SCALE
5 OF 5
SHEET

DATA 100 CONFIDENTIAL INFORMATION
This drawing is the Confidential Proprietary Property of DATA 100 and contains trade secret information. It is to be used for its purpose only. Use for any other purpose, or copy of it, disclosed or sold to, or left with any or disclosed to any other individual or legal entity without the express written authorization of DATA 100.

REVISIONS

| REV | ECO | DESCRIPTION | ORIG. | DATE | APPD. |
|---|---|---|---|---|---|
| A | — | DRNDR00352 | DC | | |
| B | DR00556 | SEE ECO | | | |
| C | DR00620 | SEE ECO | ES. | | |
| D | DR00622 | SEE ECO | ES. | | |
| E | DR00623 | SEE ECO | ES. | | |
| F | DR00875 | SEE ECO | RB | | |

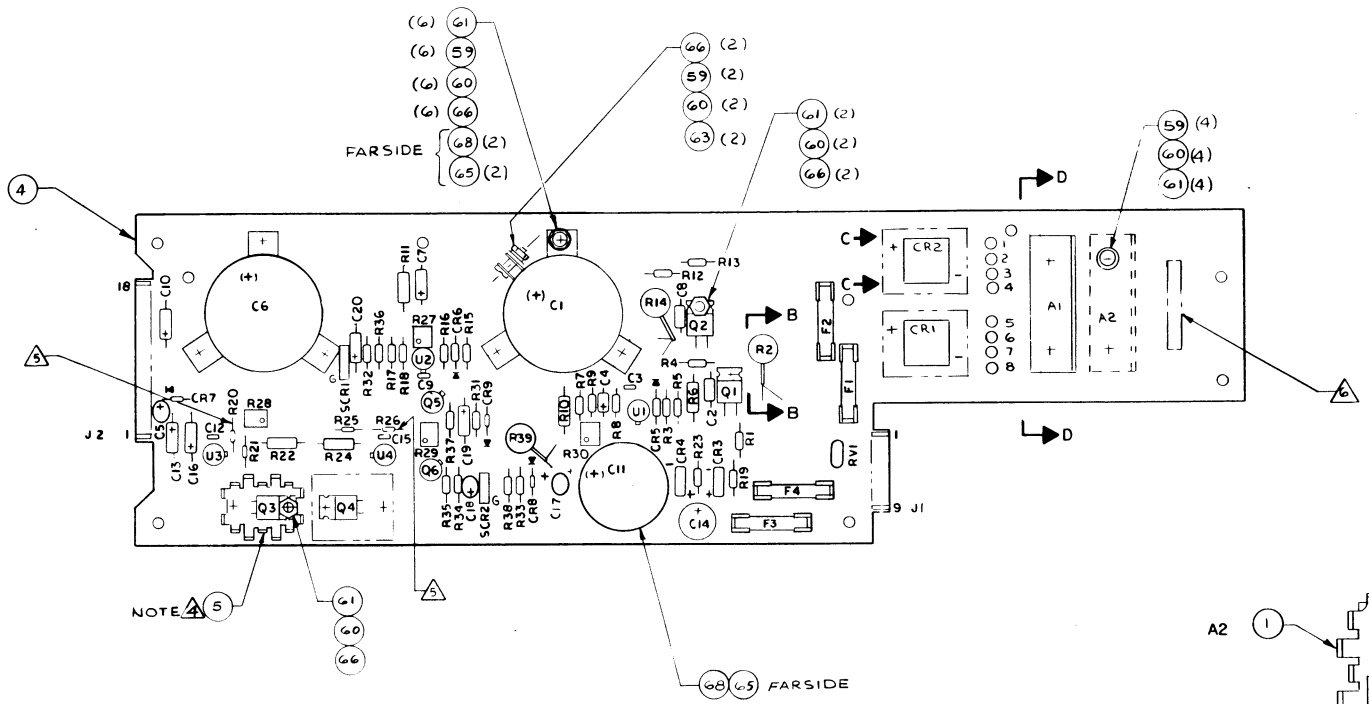


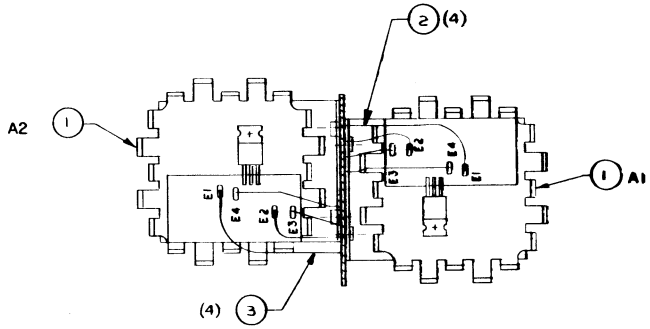


SECTION D-D

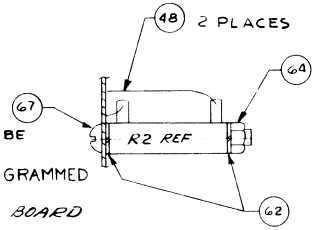


SECTION B-B
3 PLACES

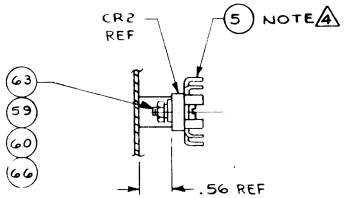


SECTION C-C
2 PLACES

1. ETCH AREA ON OPPOSITE SIDE OF BOARD IS TO BE AVOIDED WHEN DRILLING.
2. STAMP PART NUMBER & REV. OF UNPROGRAMMED BOARD AS SHOWN.
3. COMPONENTS VARIABLE, REFER TO BOARD SET SPEC 22284010.
4. APPLY ITEM NO 49 BETWEEN MTG BASE OF SEMI-CONDUCTOR COMPONENT AND HEAT SINK

3. MAX. COMPONENT HEIGHT IS 4.125 IN. HIGH.
2. FOR MASTER LOGIC/SCHEMATIC SEE DRAWING 21040192
1. FOR ASSEMBLY PROCEDURE SEE DATA 100 SPEC 21100010.

NOTES:

| | | | |
|---|---|---|---|
| DATA 100 | PW BOARD ASSY POWER SUPPLY | | |
| DRAWN | | | |
| CHECKED | | | |
| APPROVED | | | |
| SIZE D | DOCUMENT NUMBER .81040192 | REV F | |
| DO NOT SCALE PRINT | SCALE 1/1 | SHEET 1 OF 5 | |

UNIVERSAL POWER SUPPLY PC BOARD

| PART NUMBER | DESCRIPTION |
|---|---|
| 66040192 | Board, Printed Circuit (bare board) |
| 61834115 | Bracket, (capacitor mounting) |
| 52251510 | Capacitor, 47 pf; 200V |
| 52251530 | Capacitor, 1000pf; 200V |
| 52132120 | Capacitor, 0.01µf; 80V |
| 52325364 | Capacitor, 1.8µf; 35V |
| 52325227 | Capacitor, 4.7µf; 20V |
| 52325281 | Capacitor, 10µf; 20V |
| 52326188 | Capacitor, 10µf; 50V |
| 52318200 | Capacitor, 470µf; 25V |
| 52311375 | Capacitor, 4500µf; 25V |
| 52312405 | Capacitor, 9000µf; 50V |
| 52312263 | Capacitor, 18000µf; 25V |
| 55611155 | Clip, fuse |
| 51633000 | Diode, type 1N4001 |
| 51633003 | Diode, type 1N4002 |
| 51621310 | Diode, type 1N753 |
| 51621334 | Diode, type 1N974B |
| 552330 40 | Fuse, AGX, 1 1/2 AMP |
| 552 83101 | Fuse, AGX, 15 AMP |
| 86160112 | Heat Sink Assy (w/transistors installed) |

UNIVERSAL POWER SUPPLY PC BOARD

| PART NUMBER | DESCRIPTION |
|---|---|
| 54773614 | Potentiometer, 1K (trimmer) |
| 51811110 | Rectifier Assy; Sarkes-Tarzian, 6463-1 |
| 51811109 | Rectifier Assy; bridge (1 amp) |
| 51754030 | Rectifier; silicon-controlled (SCR), type 2N4442 |
| 51426031 | Regulator, voltage (I.C.); type LM304 |
| 51426032 | Regulator, voltage (I.C.); type LM305A |
| 54161600 | Resistor, 0.2 ohms; ±5%, 20W |
| 54161601 | Resistor, 0.3 ohms; ±5%, 20W |
| 54161655 | Resistor, 1.0 ohms; ±5%, 25W |
| 54400182 | Resistor, 1.3 ohms; ±5%, 2W |
| 54400130 | Resistor, 6.8 ohms; ±5%, 1/2W |
| 54400123 | Resistor, 43 ohms; ±5%, 1/2W |
| 54400124 | Resistor, 47 ohms; ±5%, 1/2W |
| 54400084 | Resistor, 62 ohms; ±5%, 1/4W |
| 54400128 | Resistor, 68 ohms; ±5%, 1/2W |
| 54400309 | Resistor, 160 ohms; ±5%, 1/2W |
| 54400315 | Resistor, 300 ohms; ±5%, 1/2W |
| 54400364 | Resistor, 510 ohms; ±5%, 1W |
| 54400285 | Resistor, 1K; ±5%, 1/4W |
| 54400328 | Resistor, 1K; ±5%, 1/2W |
| 54273630 | Resistor, 1K; ±5%, 2W |
| 54531364 | Resistor, 1.91K; ±1%, 1/8W |

UNIVERSAL POWER SUPPLY PC BOARD

| PART NUMBER | DESCRIPTION |
|---|---|
| 54531376 | Resistor, 2.43K; ±1%, 1/8W |
| 54531383 | Resistor, 3.01K; ±1%, 1/8W |
| 54400516 | Resistor, 4.7K; ±5%, 1/2W |
| 54531422 | Resistor, 6.98K; ±1%, 1/8W |
| 54531448 | Resistor, 11.3K; ±1%, 1/8W |
| 54531490 | Resistor, 33.2K; ±1%, 1/8W |
| 54533179 | Resistor, 2.74K; ± 1%, 1/8W (Fixed-Film) } NOTE 1 |
| 54531412 | Resistor, 5.62K; ± 1%, 1/8W (Fixed-Film) } NOTE 1 |
| 54531337 | Resistor, 1K;±1%, 1/8W (Fixed-Film) } NOTE 2 |
| 54531379 | Resistor, 1.91K; ±1%, 1/8W (Fixed-Film) } NOTE 2 |
| 51160002 | Transistor; type TIP 30B |
| 51162745 | Transistor; type 2N2905 |
| 51780000 | Varistor, Metal-Oxide (MOV); type (GEU40 LAZA) |

NOTES:

1. Resistor R20; One value per P.C. Assy., only---see PROGRAMMING Chart for Configuration.

2. Resistor R26; one value per P.C. Assy., only---see PROGRAMMING Chart for Configuration.

| REVISIONS | | | | | |
|---|---|---|---|---|---|
| REV. | ECO | DESCRIPTION | DRFT | DATE | CHKD |
| A | — | DRN DN00352 | [illegible] | [illegible] | [illegible] |
| B | DR00520 | SLE ECO | GDG | [illegible] | [illegible] |
| C | DR00558 | SLE ECO | GDG | 5/16/77 | [illegible] |
| D | DR00[illegible] | SLE ECO | [illegible] | 7/11/77 | [illegible] |
| E | DR00[illegible] | SLE ECO | ES | [illegible] | [illegible] |

SHEET NUMBERS

| REVISION LEVEL | 1 | 2 | 3 | 4 | 5 | 6 | 7 | 8 | 9 | 10 | 11 | 12 | 13 | 14 | 15 | 16 | 17 | 18 | 19 | 20 | 21 | 22 | 23 | 24 | 25 | 26 | 27 | 28 | 29 | 30 | 31 | 32 | 33 | 34 | 35 | 36 | 37 | 38 | 39 | 40 | 41 | 42 | 43 | 44 | 45 | 46 | 47 | 48 | 49 | 50 |
|---|---|---|---|---|---|---|---|---|---|---|---|---|---|---|---|---|---|---|---|---|---|---|---|---|---|---|---|---|---|---|---|---|---|---|---|---|---|---|---|---|---|---|---|---|---|---|---|---|---|---|
| | A | A | A | | | | | | | | | | | | | | | | | | | | | | | | | | | | | | | | | | | | | | | | | | | | | | | | |
| | B | B | B | | | | | | | | | | | | | | | | | | | | | | | | | | | | | | | | | | | | | | | | | | | | | | | | |
| | C | C | C | | | | | | | | | | | | | | | | | | | | | | | | | | | | | | | | | | | | | | | | | | | | | | | | |
| | D | D | D | | | | | | | | | | | | | | | | | | | | | | | | | | | | | | | | | | | | | | | | | | | | | | | | |
| | E | E | E | | | | | | | | | | | | | | | | | | | | | | | | | | | | | | | | | | | | | | | | | | | | | | | | |

| CONFIGURATION TABLE | | |
|---|---|---|
| OUTPUT VOLTAGES | COMPONENT | |
| | R20 | R26 |
| 5V, 10V, 30V, -12V | 5.62K | 1.91 K |
| 5V, 12V, 30V, -12V | 5.62K | 1K |
| 5V, 10V, 30V, -6V | 2.74K | 1.91K |

3. POTENTIOMETERS R27 THRU R30 ARE CORRECTLY ADJUSTED & SHAFTS PERMANENTLY SEALED DURING THE MANUFACTURING PROCESS. DO NOT ATTEMPT IN-FIELD ADJUSTMENTS.

2. COMPONENTS VARIABLE REFER TO BOARD SET SPEC 22284010.

| | | | |
|---|---|---|---|
| DATA 100 | | TITLE: SCHEMATIC - POWER SUPPLY | |
| ORIGINATOR: J. R. Volpey | 12/13/76 | | |
| APPROVAL: | | | |
| APPROVAL: R. Nadeau | 7/1/77 | SIZE D | DOCUMENT NUMBER 21040192 | REV. E |
| | 5/6/77 | | |
| | 5/5/77 | | |
| K. Hunter | 7/1/77 | SCALE | SHEET 1 OF 3 | PAGE DR |

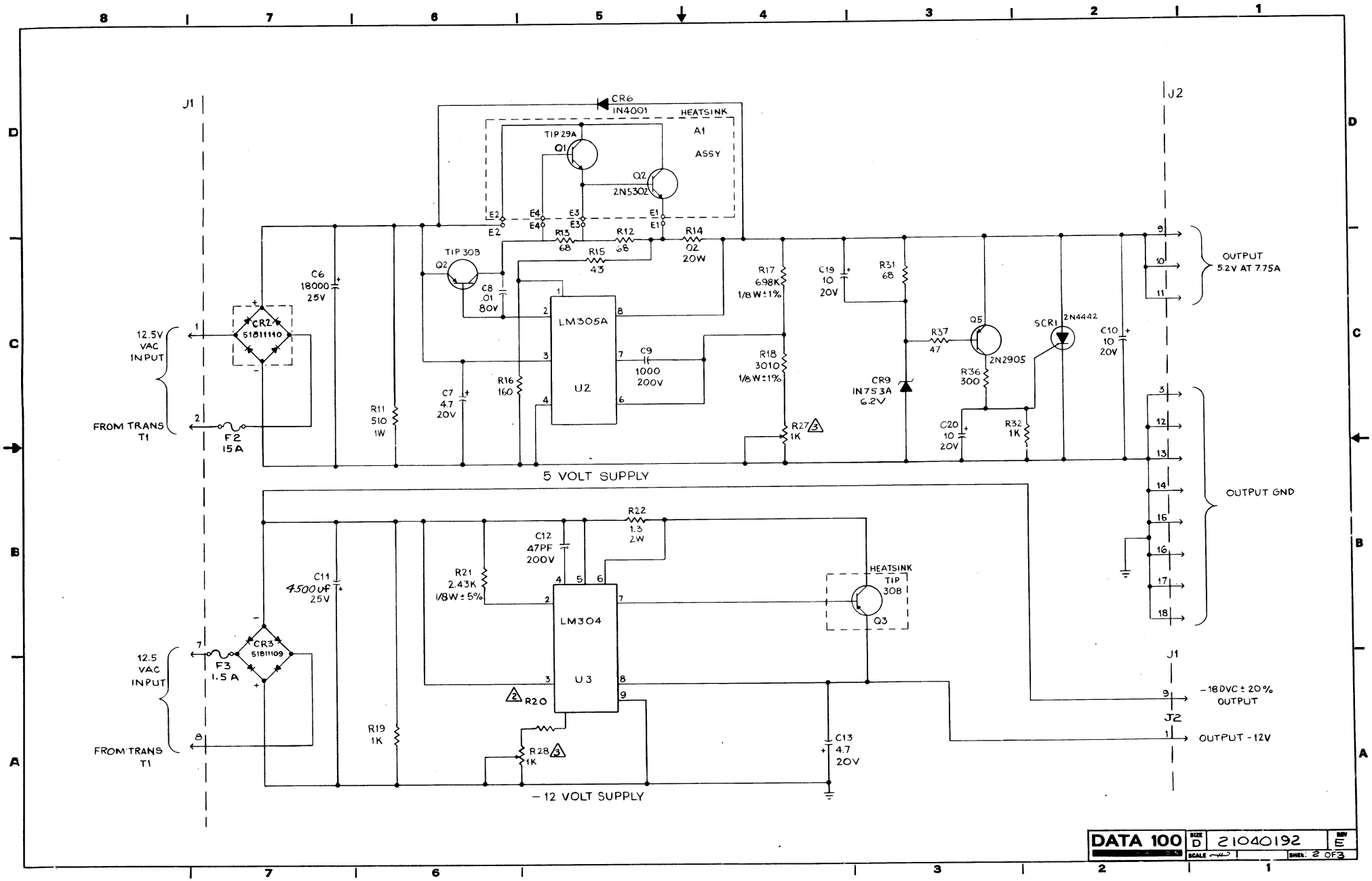
J1
J2
CR6
1N4001
HEATSINK
A1
ASSY
TIP 29A
Q1
Q2
2N5302
E2
E4
E3
E1
R13
68
R12
68
R14
.02
20W
R15
43
TIP 30B
Q2
C8
.01
80V
C6
18000
25V
CR2
51811110
12.5V
VAC
INPUT
FROM TRANS
T1
F2
15A
R11
510
1W
C7
4.7
20V
R16
160
LM305A
U2
C9
1000
200V
R17
698K
1/8W±1%
R18
3010
1/8W±1%
R27
1K
C19
10
20V
R31
68
CR9
1N753A
6.2V
R37
47
Q5
2N2905
R36
300
C20
10
20V
R32
1K
SCR1
2N4442
C10
10
20V
OUTPUT
5.2V AT 7.75A
OUTPUT GND
5 VOLT SUPPLY
R22
1.3
2W
C12
47PF
200V
R21
2.43K
1/8W±5%
C11
4500uf
25V
LM304
U3
HEATSINK
TIP
30B
Q3
CR3
51811109
12.5
VAC
INPUT
F3
1.5A
FROM TRANS
T1
R20
R19
1K
R28
1K
C13
4.7
20V
-18DVC±20%
OUTPUT
OUTPUT -12V
-12 VOLT SUPPLY
DATA 100
SIZE D
21040192
REV E
SCALE
SHEET 2 OF 3

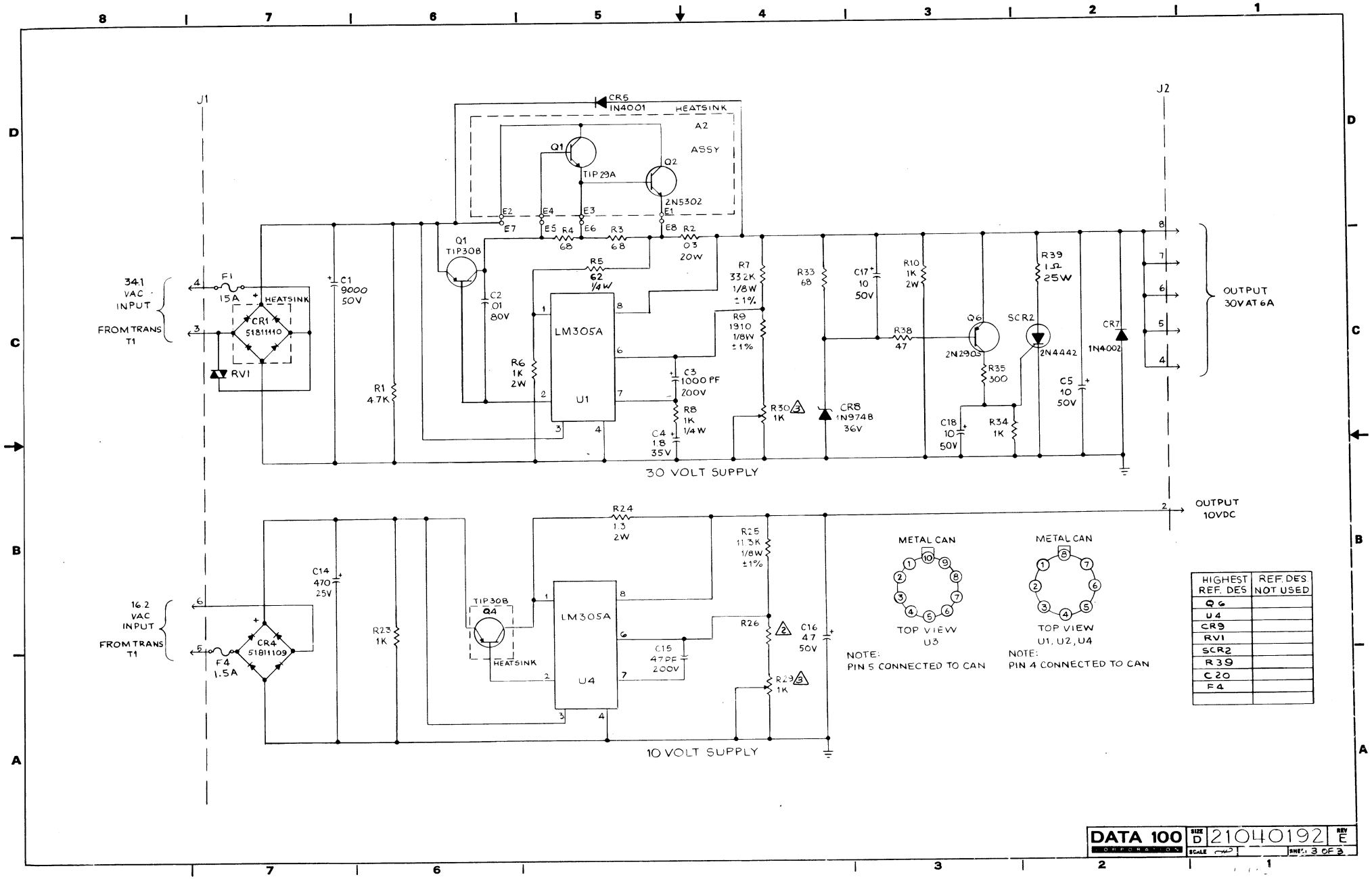


| HIGHEST REF. DES | REF. DES NOT USED |
|---|---|
| Q6 | |
| U4 | |
| CR9 | |
| RV1 | |
| SCR2 | |
| R39 | |
| C20 | |
| F4 | |
| | |

DATA 100 CORPORATION | SIZE D | 21040192 | REV E | SCALE | SHEET 3 OF 3

PROGRAMMING

UNIVERSAL POWER SUPPLY PCA

22284010-H00/H02

| PROGRAMMED BOARD NUMBER | PROGRAMMABLE COMPONENTS | | | | | |
|---|---|---|---|---|---|---|
| -H00 | R20 | 5.62K | R26 | 1.91K | | |
| -H02 | R20 | 5.62K | R26 | 1.0K | | |
| -H02 | R20 | 2.74K | R26 | 1.91K | | |
| | | | | | | |
| | | | | | | |
| | | | | | | |
| | | | | | | |

TO BE USED WITH ASSEMBLY DRAWING 81040192 AND SCHEMATIC 21040192

DATA 100 CONFIDENTIAL INFORMATION

| REVISIONS | | | | | | |
|---|---|---|---|---|---|---|
| ECO | SYM | DESCRIPTION | | DRWG | DATE | APPROVED |
| | 01 | DRN | DR00196 | HTE | | |
| | A | DRN | DR00218 | JEB | 6/7/77 | TNH |

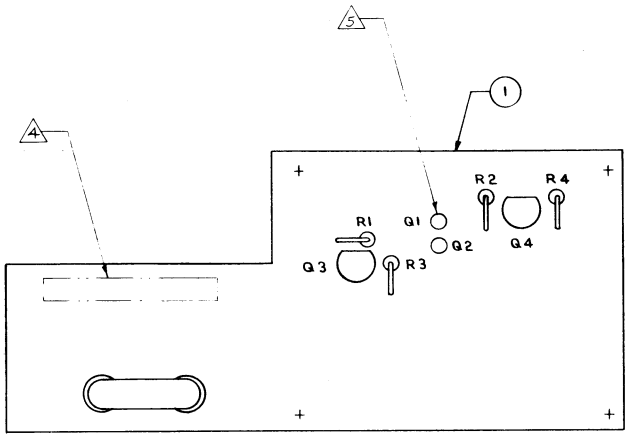


COMPONENT SIDE

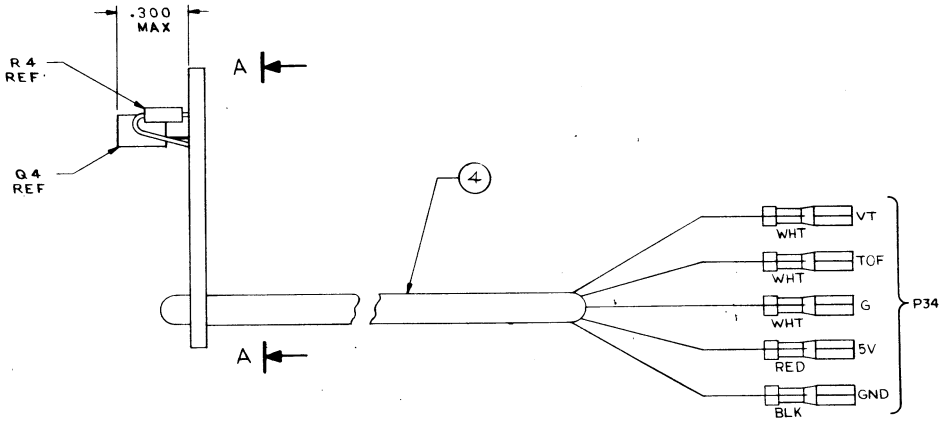


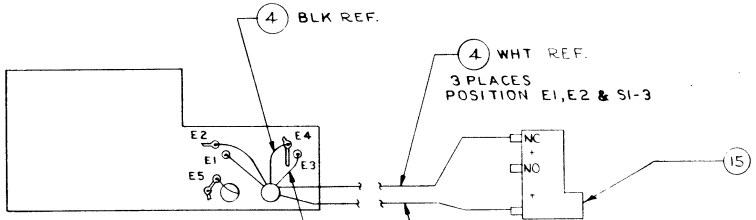


CIRCUIT SIDE

VIEW A-A
SCALE: 2/1

5. LENS OF PHOTOTRANSISTOR MUST BE ON FAR SIDE (CIRCUIT SIDE).

4. RUBBER STAMP UNPROGRAMED BOARD P/N + REV LEVEL APPROX. AS SHOWN.

3. MAX. COMPONENT HEIGHT IS .30 INCHES HIGH.

2. FOR MASTER LOGIC SCHEMATIC SEE DRAWING 21114011.

1. MAKE PER DATA 100 SPEC. 21100010.

NOTES:

FOR PARTS LIST SEE SHEET 2

UNLESS OTHERWISE SPECIFIED DIMENSIONS ARE IN INCHES TOLERANCES ON DECIMALS .X ±.X .XX ±.XX .XXX ±.XXX ANGLES ± FRACTIONS ±

MATERIAL

FINISH

| | | |
|---|---|---|
| DR | [redacted] | 2-20-70 |
| CHK | [redacted] | 5-6-72 |
| APPD | [redacted] | 6/7/77 |
| APPD | [redacted] | 6/10/77 |

NEXT ASSY

[redacted]

BOARD ASSY, 2CHAN-VFU PHOTOTRANSISTOR-1" TAPE

| SIZE | | REV |
|---|---|---|
| D | 81040390 | A |

SCALE 4/1 | ER | SHEET 1 OF 2

310113-A

DATA 100 CONFIDENTIAL INFORMATION
This drawing is the Confidential, Proprietary Property of DATA 100 and includes trade secret information. It is to be used for no purpose other than the limited purpose for which it is delivered and is not to be used by or disclosed to any other individual or legal entity without the express written authorization of a representative of DATA 100.

REVISIONS

| REV. | ECO. | DESCRIPTION | ORIG. | DATE | APPD. |
|---|---|---|---|---|---|
| C1 | | DRN DR00196 | HTE | | |
| A | θ | DRN DR00218 | JEB | 5-9-72 | |

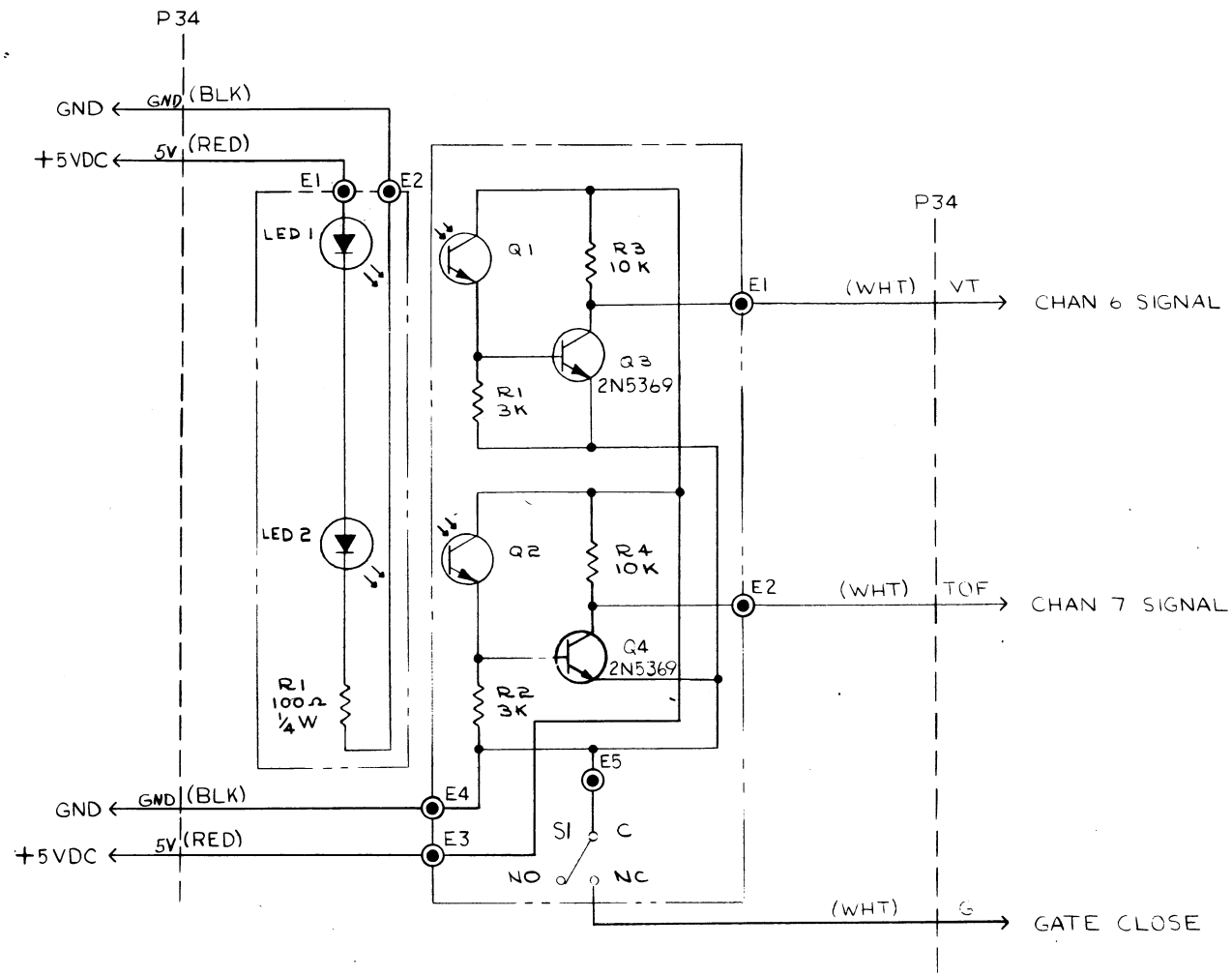


3 UNLESS OTHERWISE SPECIFIED: ALL DIODES ARE DATA 100 P/N 51611900
ALL PHOTOTRANSISTORS ARE DATA 100 P/N 51122050

2. UNLESS OTHERWISE SPECIFIED ALL RESISTOR VALUES ARE IN OHMS, ±5%, ⅛W.

1. S1 AT GND WHEN GATE IS OPEN.

NOTES:

| ITEM | PART NO. | QTY | DESCRIPTION |
|---|---|---|---|

DATA 100 CORPORATION

DRAWN D.T. Cuny 10-6-76
CHECKED
APPROVED

TITLE: SCHEMATIC VFU UNIT 2 CHANNEL 1" TAPE

SIZE C | DOCUMENT NUMBER 21114011 | REV A

DO NOT SCALE PRINT | SCALE | SHEET 1 OF 1

TOLERANCE UNLESS OTHERWISE SPECIFIED: 1 PLACE ±.1 2 PLACE ±.01 3 PLACE ±.005

610002-B

BOARD ASSY - 2 Channel VFU
Phototransistor - 1 inch Tape

| PART Nº | DESCRIPTION |
|---|---|
| 66040390 | P.W. Board, Phototransistor |
| 51122050 | Phototransistor, TIL 604 |
| 54400253 | Resistor, 3K Ohms, 1/8 W, +5% |
| 54400438 | Resistor, 10K Ohms, 1/8W, +5% |
| 71647212 | Switch, Limit |
| 51122330 | Transistor, 2N5369 |
| 86130280 | Wire Assy, Phototransistor |
| 37203500 | Wire, 24 AWG, Black |

DATA 100 CONFIDENTIAL INFORMATION

| REVISIONS | | | | | |
|---|---|---|---|---|---|
| ECO | SYM | DESCRIPTION | ORIG | DATE | APPROVED |
| ~~5~~ | 01 | DRN DR00136 | HTE | | |
| ~~6~~ | A | DRN DR00218 | JCB | [illegible] | [illegible] |

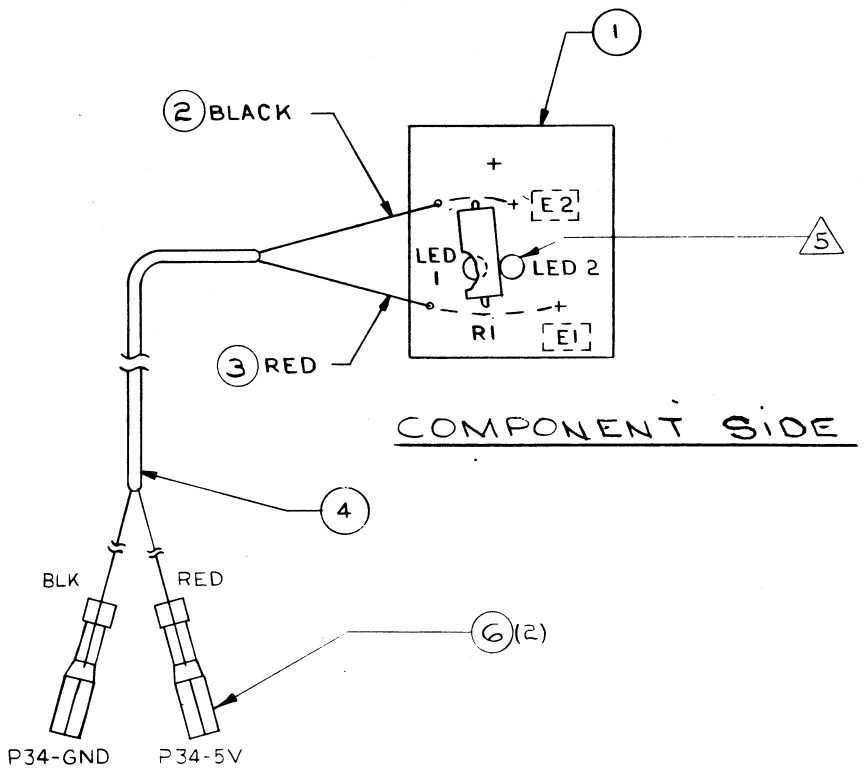


7. REF. DESIGNATIONS ARE FOR REFERENCE ONLY AND DO NOT APPEAR ON ACTUAL PART.
6. NOTATION IN [illegible] APPEARS ON FAR SIDE (CIRCUIT SIDE).
5. LENS OF LED MUST BE ON FAR SIDE (CIRCUIT SIDE)
4. FOR VFU SCHEMATIC SEE 21114011.
3. MAX COMPONENT HEIGHT IS .125 INCHES HIGH.
2. MARK ASSEMELY NUMBER AND LATEST REV LEVEL.
1. MAKE PER DATA 100 SPEC. 21100010.

NOTES

QTY. OF WIRE SHOWN IN INCHES

| TEM | PART NO. | QTY | DESCRIPTION |
|---|---|---|---|
| 6 | 56222430 | 2 | TERMINAL |
| 5 | 54400261 | 1 | RESISTOR, 100 OHMS ±5%, ¼W, (R1) |
| 4 | 51611900 | 2 | LED (LED 1 & 2) |
| 3 | 37271272 | 23 | WIRE, 28 AWG, RED |
| 2 | 37271270 | 23 | WIRE, 28 AWG, BLACK |
| 1 | 66[illegible]404 [illegible] | 1 | PW BOARD VFU LED |

UNLESS OTHERWISE SPECIFIED DIMENSIONS ARE IN INCHES TOLERANCES ON DECIMALS: .X ± .XX ± .XXX ± ANGLES: ± FRACTIONS: ±

MATERIAL

FINISH

DR [illegible] 9-21-67
CHK A Eccles 5-6-77
APPD [illegible]

NEXT ASSY

**DATA 100 CORPORATION**

BOARD ASSEMBLY, VFU LED - 2 CHANNEL - 1" TAPE

SIZE C | 31040400 | REV A

SCALE 4/1 | ER | SHEET 1 OF 1

3100 94-A

DATA 100 INC CONFIDENTIAL INFORMATION
This drawing is the Confidential, Proprietary Property of DATA 100, Inc. and contains trade secret information. It is to be used for no purpose other than the limited purpose for which it is delivered and is not to be copied by or disclosed to any other individual or legal entity without the express written authorization of DATA 100, Inc.

| REVISIONS | | | | | |
|---|---|---|---|---|---|
| REV | ECO | DESCRIPTION | ORIG. | DATE | APPD. |
| 01 | — | HISTORY | ES | 4-8-77 | |
| A | — | DRN DR00412 | ES | 6-6-77 | AR |

## WIRE TAB LISTING

| WIRE COLOR | ORIGIN | DESTINATION | TERM. METHOD | FUNCTION |
|---|---|---|---|---|
| GRN | P5-9 | ITEM 1-E9 | SOLDER | ALARM LAMP |
| RED | 1 | E1 | | +5V |
| BLK | 6 | E6 | | GND |
| BLU | 8 | E8 | | MOTOR OFF |
| VIO | 10 | E10 | | NO PAPER |
| BRN | 4 | E4 | | SPARE |
| GRY | 12 | E12 | | SPARE |
| WHT | 7 | E7 | | READY LAMP |
| ORN | 2 | E2 | | FF PB |
| WHT/BLK | 5 | E5 | | STOP PB |
| WHT/RED | 11 | E11 | | PRINT PB |
| YEL | P5-3 | ITEM 1-E3 | SOLDER | LF PB |
| SHIELD | ITEM 9 | ITEM 1-E14 | SOLDER | GND |

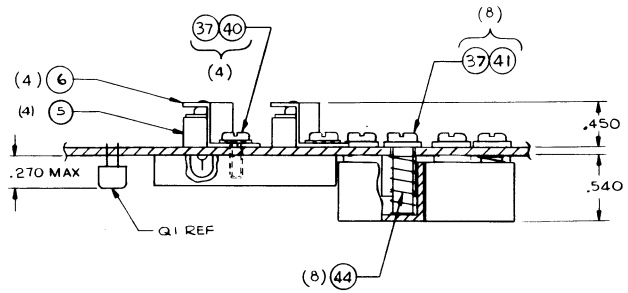


SECTION A-A

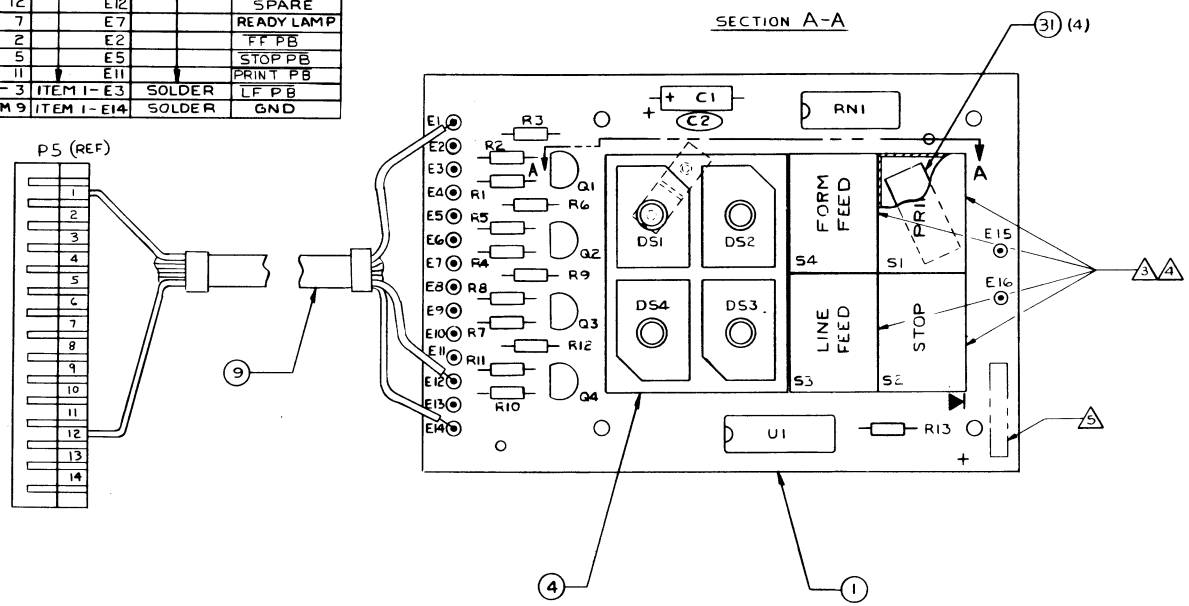


SEE SHEETS 2 & 3 FOR PARTS LIST.

3. RUBBER STAMP UNPROGRAMMED BOARD P/N APPROXIMATELY AS SHOWN.
4. ORIENT PUSHBUTTON HORIZONTALLY AND VERTICALLY WITH EDGES OF P.W. BOARD
5. FOR PUSHBUTTON SELECTION SEE STYLING SPEC 31850000-31851999.

NOTES:

2. FOR MASTER LOGIC/SCHEMATIC SEE DRAWING 21040 960
1. FOR ASSEMBLY PROCEDURE SEE DATA 100 SPEC 21100010.

| ITEM | PART NO | QTY | DESCRIPTION |
|---|---|---|---|

DATA 100 CORPORATION

TITLE: PWB ASSEMBLY, STD, PUSHBUTTON BD. PHASE II

DRAWN E. Schulz 4-8-77
CHECKED 6-3-77
APPROVED 6-6-77
6/4/77

TOLERANCE UNLESS OTHERWISE SPECIFIED: 3 PLACE ± 2 PLACE ± ANGLES ±

SIZE D | DOCUMENT NUMBER 81040960 | REV. A

DR | DO NOT SCALE PRINT | SCALE 2/1 | SHEET 1 OF 3

PUSHBUTTON ASSEMBLY (PH. II)

| PART № | DESCRIPTION |
|---|---|
| 66040960 | P.W. Board; Pushbutton (Annunciator); PH. II (bare board) |
| 86130313 | Cable Assembly; Pushbutton Board |
| 52252265 | Capacitor, .05 ufd, 12V; 20% |
| 52325127 | Capacitor, 40 ufd, Elect., Tantalum |
| 67640552 | Contact; Lamp Pushbutton |
| 51320035 | I.C., Type SN74279 (S/R Latches) |
| 67640550 | Reflector, Lamp; Pushbutton |
| 54400271 | Resistor, 270 ohms, 1/4 W., 5% |
| 54400283 | Resistor, 820 ohms, 1/4 W., 5% |
| 54400285 | Resistor, 1.0K, 1/4 W., 5% |
| 54400481 | Resistor, 10.0 K, 1/4 W., 5% |
| 54820046 | Resistor Network (DIP-PACK®); 1.0K |
| 61336258 | Screw, P.H., Tapping "F", 4-40X.312 inch |
| 67640551 | Spacer, Lamp Pushbutton |
| 62511765 | Spring; LL-022C-4SS |
| 71647214 | Switch; limit (Micro-type) |
| 51122330 | Transistor, Type 2N5369 |
| 61221250 | Washer, flat., No. 4, Nylon |
| 61251106 | Washer, lock, External tooth, No. 4 |

ODEC, INC. CONFIDENTIAL INFORMATION
This drawing is the Confidential, Proprietary Property of ODEC, INC. and includes trade secret information. It is to be used for no purpose other than the limited purpose for which it is disclosed and is not to be used by or disclosed to any entity individual or legal entity without the express written authorization of ODEC, INC.

| REVISIONS | | | | | |
|---|---|---|---|---|---|
| REV. | ECO | DESCRIPTION | ORIG. | DATE | APPD. |
| 01 | θ | HISTORY | C.S. | 4-7-77 | |
| A | θ | DRN DR00412 | C.S. | 6-6-77 | AR |

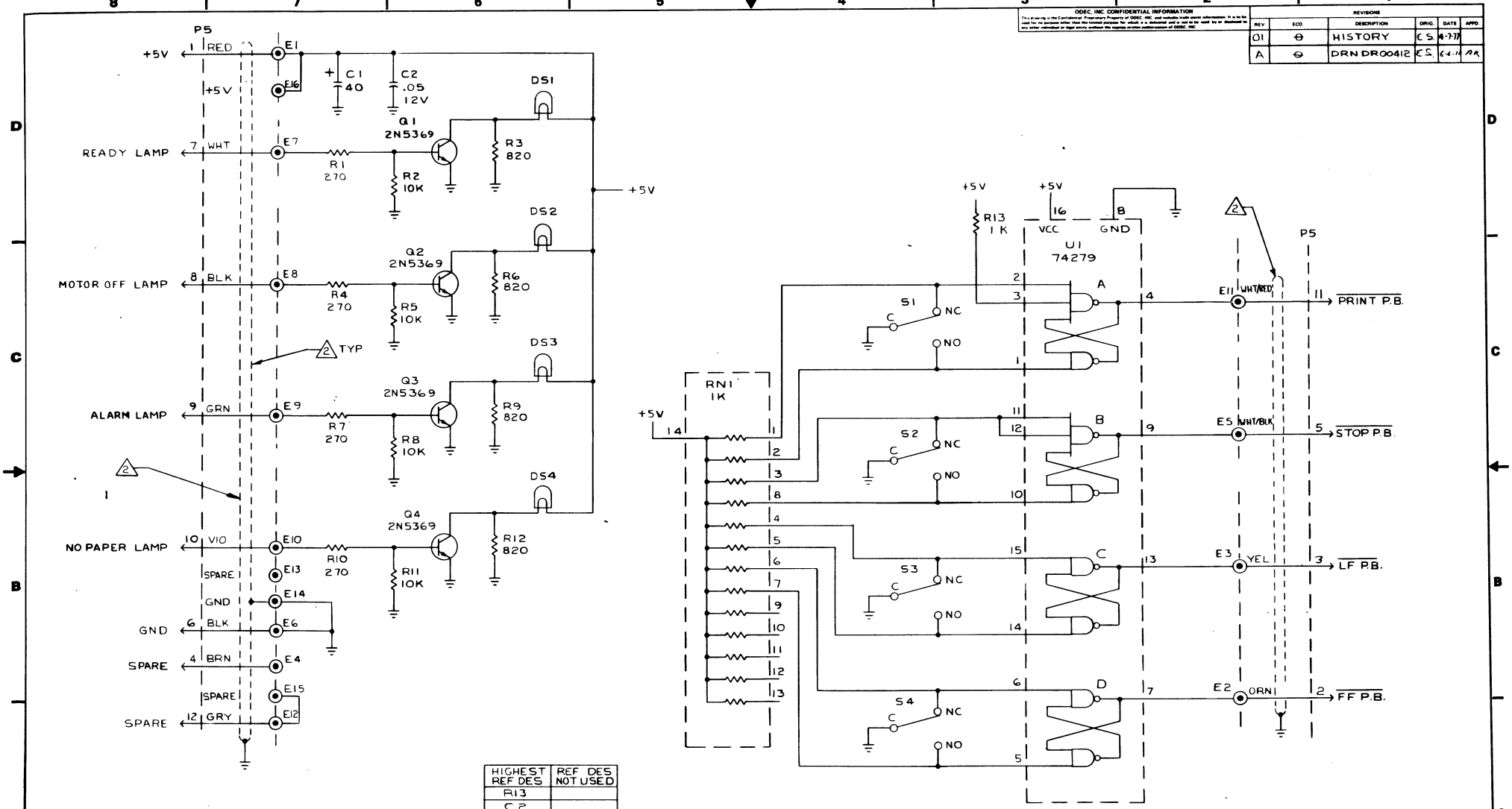


| HIGHEST REF DES | REF DES NOT USED |
|---|---|
| R13 | |
| C2 | |
| | |
| U1 | |
| RN1 | |
| S4 | |
| DS4 | |
| E16 | |
| J1 | |
| P5 | P1-P4 |

2 THE WIRE SHIELDING & COLOR PERTAINS ONLY TO 81040960

NOTES:

1. UNLESS OTHERWISE SPECIFIED;
ALL RESISTORS ARE IN OHMS, ±5%, 1/4W
ALL CAPACITORS ARE IN MICROFARADS

| ITEM | PART NO | QTY | DESCRIPTION |
|---|---|---|---|

DATA 100

TITLE: P.W. BD SCHEMATIC PUSHBUTTON BD. (ANN) PH. 2

| | | |
|---|---|---|
| DRAWN C.S. | 4-7-77 | |
| CHECKED | 6-3-77 | |
| APPROVED | 6-6-77 | |
| | 6-7-77 | |
| | 6-9-77 | |

SIZE D — DOCUMENT NUMBER 21040960 — REV. A

DR — DO NOT SCALE PRINT — SCALE 1 — SHEET 1 OF 1

TOLERANCE UNLESS OTHERWISE SPECIFIED: .3 PLACE .2 PLACE ANGLES

DATA 100 CONFIDENTIAL INFORMATION

| REVISIONS | | | | | |
|---|---|---|---|---|---|
| ECO | SYM | DESCRIPTION | ORIG | DATE | APPROVED |
| 0 | 01 | DRN DR 00196 | HTE | | |
| F | A | DRN DR 00337 | GDG | 2/14/7 | |

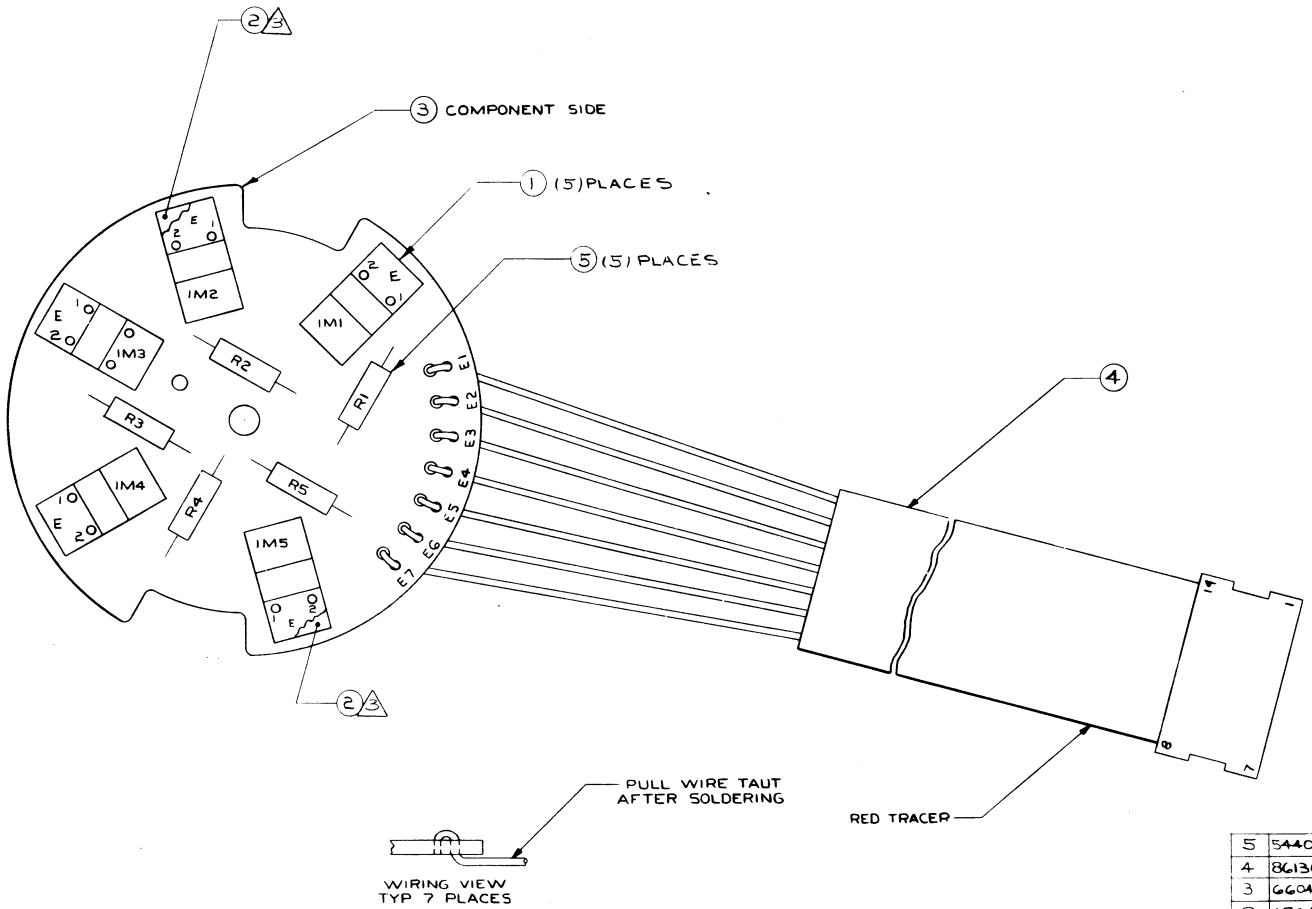


| ITEM | PART NO. | QTY | DESCRIPTION |
|---|---|---|---|
| 5 | 54400265 | 5 | RESISTOR 150, ¼ WATT, ±5% R1 - R5 |
| 4 | 86130029 | 1 | CABLE ASS'Y. |
| 3 | 66040170 | 1 | PWB ASSY, DATA FEEDBACK |
| 2 | 67640422 | 2 | SPACER, INTERRUPTER MODULE |
| 1 | 67640421 | 5 | INTERRUPTER MODULE, MODIFIED IM1 - IM5 |

4. FOR SCHEMATIC REFER TO DOCUMENT 21040170.
3. MAX. COMPONENT HEIGHT IS .530, FIND NO. 2 & FIND NO. 1 (IM2 & IM5)
2. REF. DESIGNATIONS ARE SHOWN FOR REFERENCE ONLY AND DO NOT APPEAR ON ACTUAL PART.
1. MAKE PER DATA 100 SPEC. 22270100.

NOTES :

MATERIAL

FINISH

DR R. DEHNERT 3/26/72

CHK

APPD

NEXT ASSY

DATA 100

BOARD ASS'Y, DATA FEEDBACK

SIZE D | 81040170 | REV A

SCALE 4:1 | DR | SHEET 1 OF 1

31C-216-B

FEEDBACK P.C. BOARD

| PART Nº | DESCRIPTION |
|---|---|
| 66040170 | P.W.B. Assy, Data Feedback; bare board |
| 86130029 | Cable Assy |
| 67640421 | Interrupter Module, Modified, IM1-IM5 |
| 54400265 | Resistor, 150 Ohms, 1/4W, +5% |
| 67640422 | Spacer, Interrupter Module |

DATA 100 CONFIDENTIAL INFORMATION
This drawing is the Confidential Proprietary Property of DATA 100 and includes trade secret information. It is to be used for no purpose other than the limited purpose for which it is delivered and is not to be used by or disclosed to any other individual or legal entity without the express written authorization of an officer of DATA 100.

| REVISIONS | | | | | |
|---|---|---|---|---|---|
| ECO | SYM | DESCRIPTION | ORIG | DATE | APPROVED |
| ~~0~~ | 01 | DRN DR00196 | HTE | | |
| ~~0~~ | A | DRN DR00337 | GDG | 2/14/77 | |

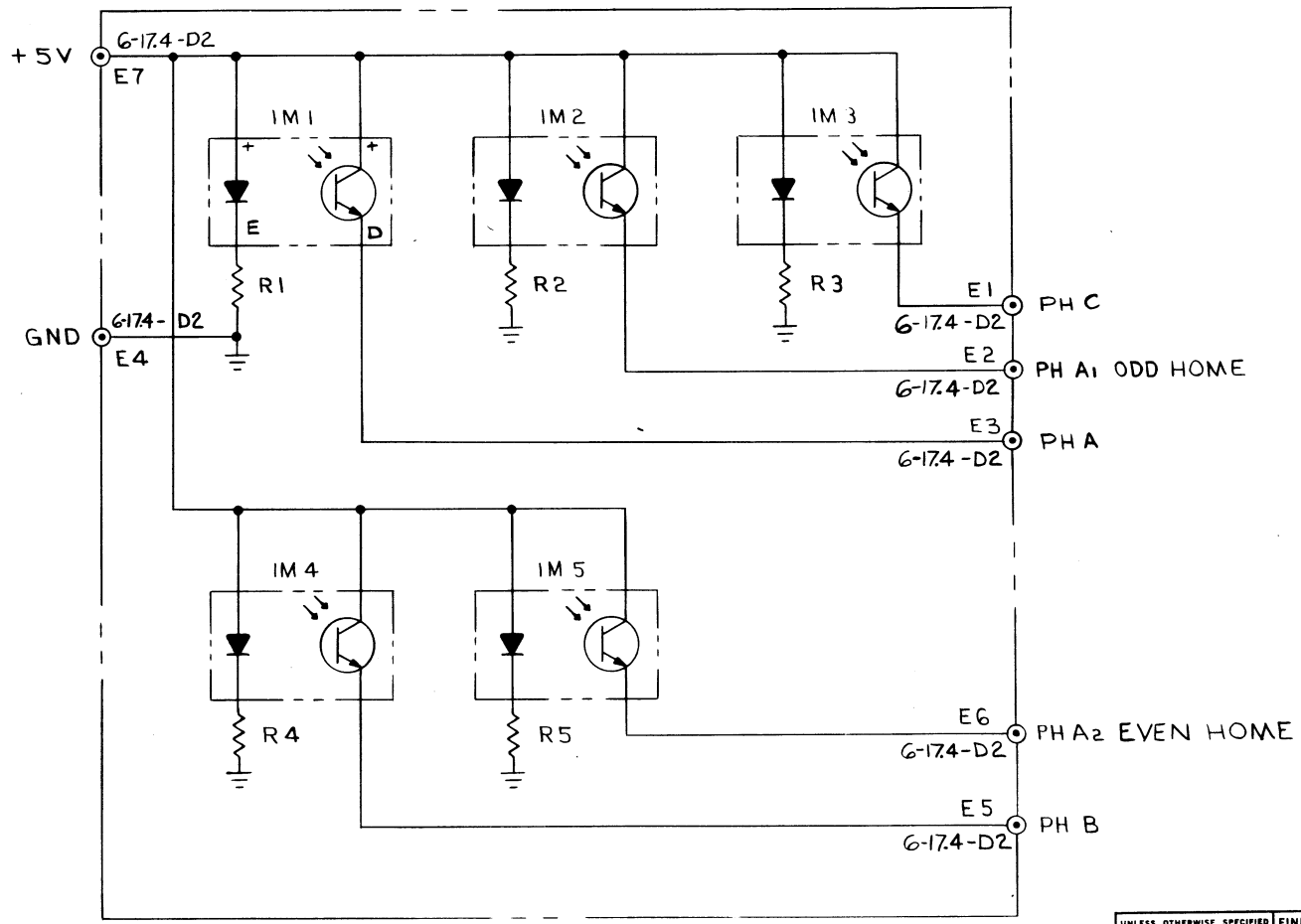


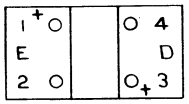


TOP VIEW
IM1 - IM5

3. FOR P.W.B. ASSY. REFER TO DOCUMENT 81040110.

2. UNLESS OTHERWISE SPECIFIED ALL RESISTOR VALUES ARE 150 OHMS; ±5%; ¼W. IM1-IM5 (INTERRUPTER MODULE) ARE DATA 100 P/N 67640421.

1. MAKE PER DATA 100 SPEC. 22270100.

NOTES:

| | | |
|---|---|---|
| UNLESS OTHERWISE SPECIFIED DIMENSIONS ARE IN INCHES TOLERANCES ON DECIMALS: .X ± .XX ± .XXX ± ANGLES: ± FRACTIONS: ± | FINISH | DATA 100 |
| | DR D. Gaspin 6-6-73 | BOARD SCHEMATIC, DATA FEEDBACK ASSEMBLY |
| | CHK | |
| | APPD HG 6/13/73 | SIZE C — 21040170 — REV A |
| MATERIAL | | |
| | NEXT ASSY | SCALE NONE — DR — SHEET 1 OF 1 |

610087-B

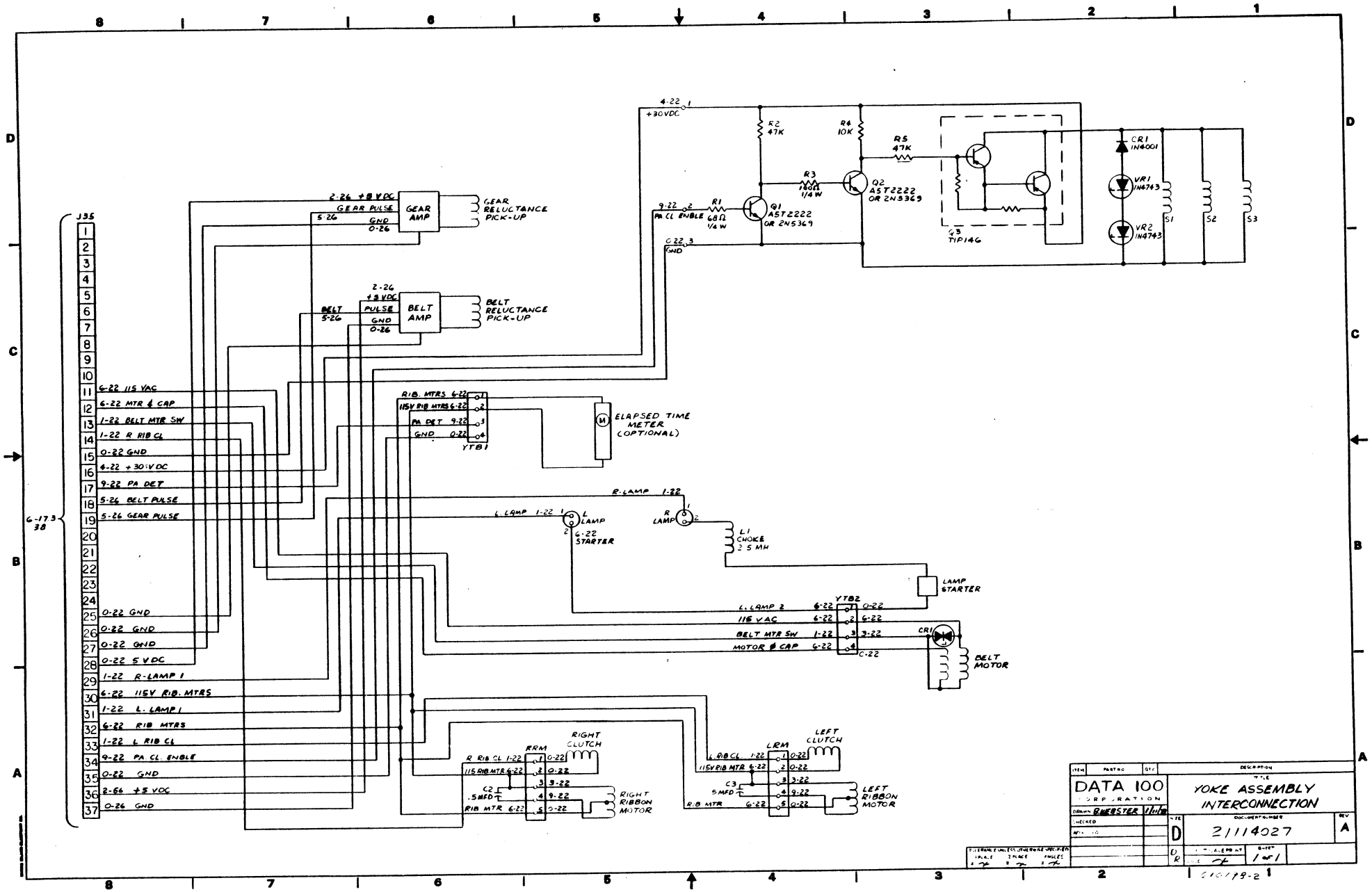
J35
6-17 & 38
6-22 115 VAC
6-22 MTR & CAP
1-22 BELT MTR SW
1-22 R RIB CL
0-22 GND
4-22 +30VDC
9-22 PA DET
5-26 BELT PULSE
5-26 GEAR PULSE
0-22 GND
0-22 GND
0-22 GND
0-22 5 VDC
1-22 R-LAMP 1
6-22 115V RIB. MTRS
1-22 L. LAMP 1
6-22 RIB MTRS
1-22 L RIB CL
9-22 PA CL. ENBLE
0-22 GND
2-64 +5 VDC
0-26 GND
2-26 +5 VDC
GEAR PULSE
5-26
GND
0-26
GEAR AMP
GEAR RELUCTANCE PICK-UP
2-26
+5 VDC
BELT 5-26
PULSE
GND
0-26
BELT AMP
BELT RELUCTANCE PICK-UP
4-22
+30VDC
R2 47K
R4 10K
R5 47K
R3 180Ω 1/4 W
Q2 AST2222 OR 2N5369
9-22
PA CL ENBLE
R1 68Ω 1/4 W
Q1 AST2222 OR 2N5369
0-22
GND
Q3 TIP146
CR1 1N4001
VR1 1N4743
VR2 1N4743
S1
S2
S3
RIB. MTRS 6-22
115V RIB MTRS 6-22
PA DET 9-22
GND 0-22
YTB1
ELAPSED TIME METER (OPTIONAL)
R-LAMP 1-22
L LAMP 1-22
L LAMP
6-22
STARTER
R LAMP
L1 CHOKE 2.5 MH
LAMP STARTER
YTB2
L. LAMP 2 6-22 0-22
115 V AC 6-22 6-22
BELT MTR SW 1-22 3-22
MOTOR & CAP 6-22 C-22
CR1
BELT MOTOR
RRM
R RIB CL 1-22 0-22
115 RIB MTR 6-22 0-22
C2 .5 MFD 3-22
9-22
RIB MTR 6-22 0-22
RIGHT CLUTCH
RIGHT RIBBON MOTOR
LRM
L RIB CL 1-22 0-22
115V RIB MTR 6-22 0-22
C3 .5 MFD 3-22
9-22
R.B MTR 6-22 0-22
LEFT CLUTCH
LEFT RIBBON MOTOR
DATA 100 CORPORATION
DRAWN BWEBSTER 11/1/78
CHECKED
YOKE ASSEMBLY INTERCONNECTION
SIZE D
DOCUMENT NUMBER 21114027
REV A
SCALE
SHEET 1 of 1
ITEM PART NO QTY DESCRIPTION
TOLERANCE UNLESS OTHERWISE SPECIFIED
SCALE 2 PLACE ANGLES
C10178-2

DATA 100 CONFIDENTIAL INFORMATION

| REV | ECO | DESCRIPTION | DRWN | DATE | APPD |
|---|---|---|---|---|---|
| A | 0 | DRN DR00723 | UM | 7/7/7 | TH |

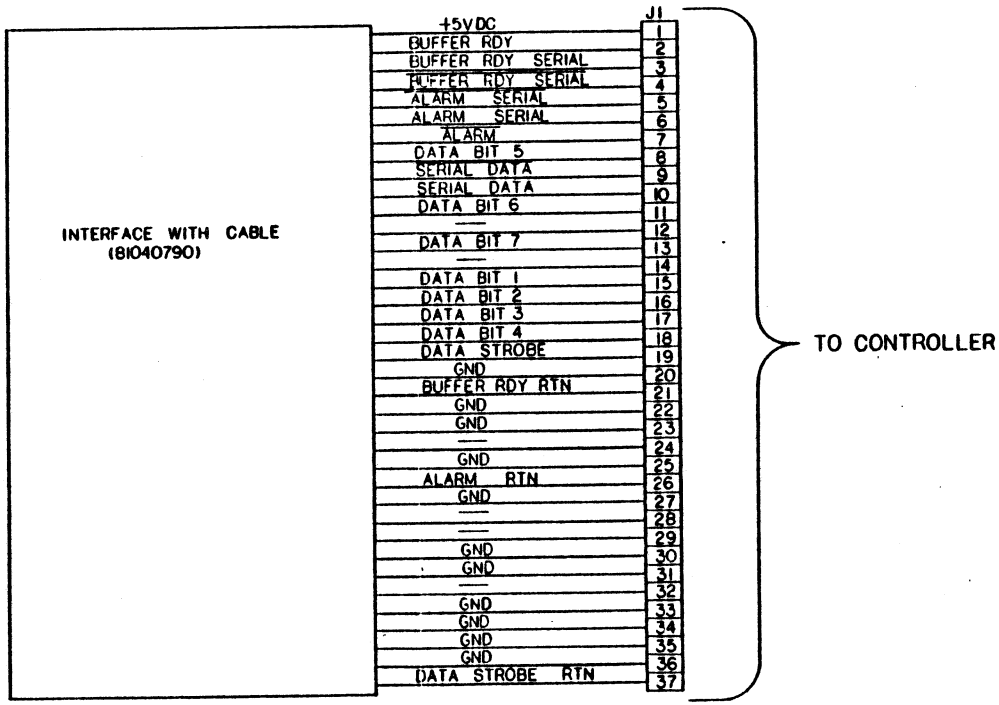


| ITEM | PART NO | QTY | DESCRIPTION |
|---|---|---|---|
| | | | |

DATA 100 CORPORATION

DRAWN JMC 7-7-7
CHECKED 7-6-7
APPROVED 7/7/7

TITLE: HARRIS INTERFACE TO CONTROLLER

SIZE D — DOCUMENT NUMBER 21114041 — REV A

DO NOT SCALE PRINT — SCALE 1 — SHEET 1 OF 1

NOTES:

1. MAKE PER DATA 100 SPEC. 22270100.

SHEET NUMBERS

| 1 | 2 | 3 | 4 | 5 | 6 | 7 | 8 | 9 | 10 | 11 | 12 | 13 | 14 | 15 | 16 | 17 | 18 | 19 | 20 | 21 | 22 | 23 | 24 | 25 | 26 | 27 | 28 | 29 | 30 | 31 | 32 | 33 | 34 | 35 | 36 | 37 | 38 | 39 | 40 | 41 | 42 | 43 | 44 | 45 | 46 | 47 | 48 | 49 | 50 |
|---|---|---|---|---|---|---|---|---|---|---|---|---|---|---|---|---|---|---|---|---|---|---|---|---|---|---|---|---|---|---|---|---|---|---|---|---|---|---|---|---|---|---|---|---|---|---|---|---|---|
| A | A | A | A | | | | | | | | | | | | | | | | | | | | | | | | | | | | | | | | | | | | | | | | | | | | | | | |

REVISION LEVEL

THE FOLLOWING SIGNAL NAMES MAY VARY DEPENDING ON P.W. BOARDS.
DEP CHAR 1
PAPER ADVANCE
READY
SELF TEST ENABLE

1. EXAMPLE OF ZONE TAG LINES

A

SHEET NO

NOTES:

| DATA 100 | TITLE INTERCONNECTION DIAGRAM MOTHER BOARD | |
|---|---|---|
| ORIGINATOR | | |
| APPROVAL | | |
| D | DRAWING NUMBER 21114014 | REV A |
| | | PAGE 1 OF 4 |

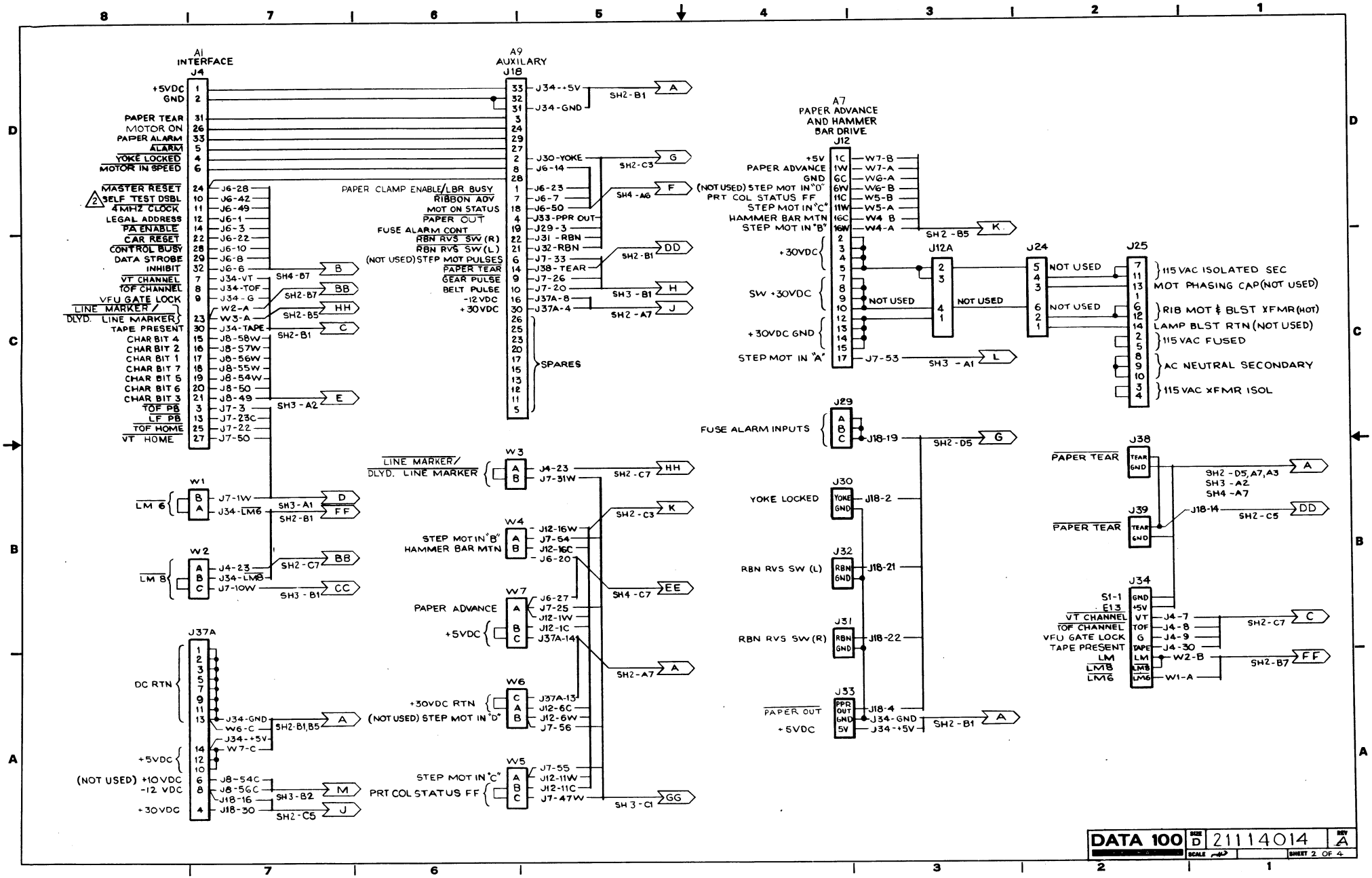
A1 INTERFACE
J4
+5VDC
GND
PAPER TEAR
MOTOR ON
PAPER ALARM
ALARM
YOKE LOCKED
MOTOR IN SPEED
MASTER RESET
SELF TEST DSBL
4 MHZ CLOCK
LEGAL ADDRESS
PA ENABLE
CAR RESET
CONTROL BUSY
DATA STROBE
INHIBIT
VT CHANNEL
TOF CHANNEL
VFU GATE LOCK
LINE MARKER/
DLYD. LINE MARKER
TAPE PRESENT
CHAR BIT 4
CHAR BIT 2
CHAR BIT 1
CHAR BIT 7
CHAR BIT 5
CHAR BIT 6
CHAR BIT 3
TOF PB
LF PB
TOF HOME
VT HOME
A9 AUXILARY
J18
PAPER CLAMP ENABLE/LBR BUSY
RIBBON ADV
MOT ON STATUS
PAPER OUT
FUSE ALARM CONT
RBN RVS SW (R)
RBN RVS SW (L)
(NOT USED) STEP MOT PULSES
PAPER TEAR
GEAR PULSE
BELT PULSE
-12VDC
+30VDC
SPARES
A7 PAPER ADVANCE AND HAMMER BAR DRIVE
J12
+5V
PAPER ADVANCE
GND
(NOT USED) STEP MOT IN "D"
PRT COL STATUS FF
STEP MOT IN "C"
HAMMER BAR MTN
STEP MOT IN "B"
+30VDC
SW +30VDC
+30VDC GND
STEP MOT IN "A"
J12A
J24
J25
NOT USED
115 VAC ISOLATED SEC
MOT PHASING CAP (NOT USED)
RIB MOT & BLST XFMR (HOT)
LAMP BLST RTN (NOT USED)
115 VAC FUSED
AC NEUTRAL SECONDARY
115 VAC XFMR ISOL
J29
FUSE ALARM INPUTS
J30
YOKE LOCKED
J32
RBN RVS SW (L)
J31
RBN RVS SW (R)
J33
PAPER OUT
+5VDC
J38
PAPER TEAR
J39
PAPER TEAR
J34
S1-1
E13
VT CHANNEL
TOF CHANNEL
VFU GATE LOCK
TAPE PRESENT
LM
LMB
LM6
W1
LM 6
W2
LM 8
W3
LINE MARKER/
DLYD. LINE MARKER
W4
STEP MOT IN "B"
HAMMER BAR MTN
W7
PAPER ADVANCE
+5VDC
W6
+30VDC RTN
(NOT USED) STEP MOT IN "D"
W5
STEP MOT IN "C"
PRT COL STATUS FF
J37A
DC RTN
+5VDC
(NOT USED) +10VDC
-12 VDC
+30VDC
SH2-B1
SH2-C3
SH4-A6
SH2-B1
SH3-B1
SH2-A7
SH4-B7
SH2-B7
SH2-B5
SH2-B1
SH3-A2
SH3-A1
SH2-B1
SH2-C7
SH3-B1
SH2-C7
SH2-C3
SH4-C7
SH2-A7
SH2-B1,B5
SH3-B2
SH2-C5
SH3-C1
SH2-B5
SH3-A1
SH2-D5
SH2-C7
SH2-C5
SH2-B7
SH2-B1
SH2-C7
SH2-B7
SH2-D5, A7, A3
SH3-A2
SH4-A7
SH2-C5
DATA 100
SIZE D
21114014
REV A
SCALE
SHEET 2 OF 4

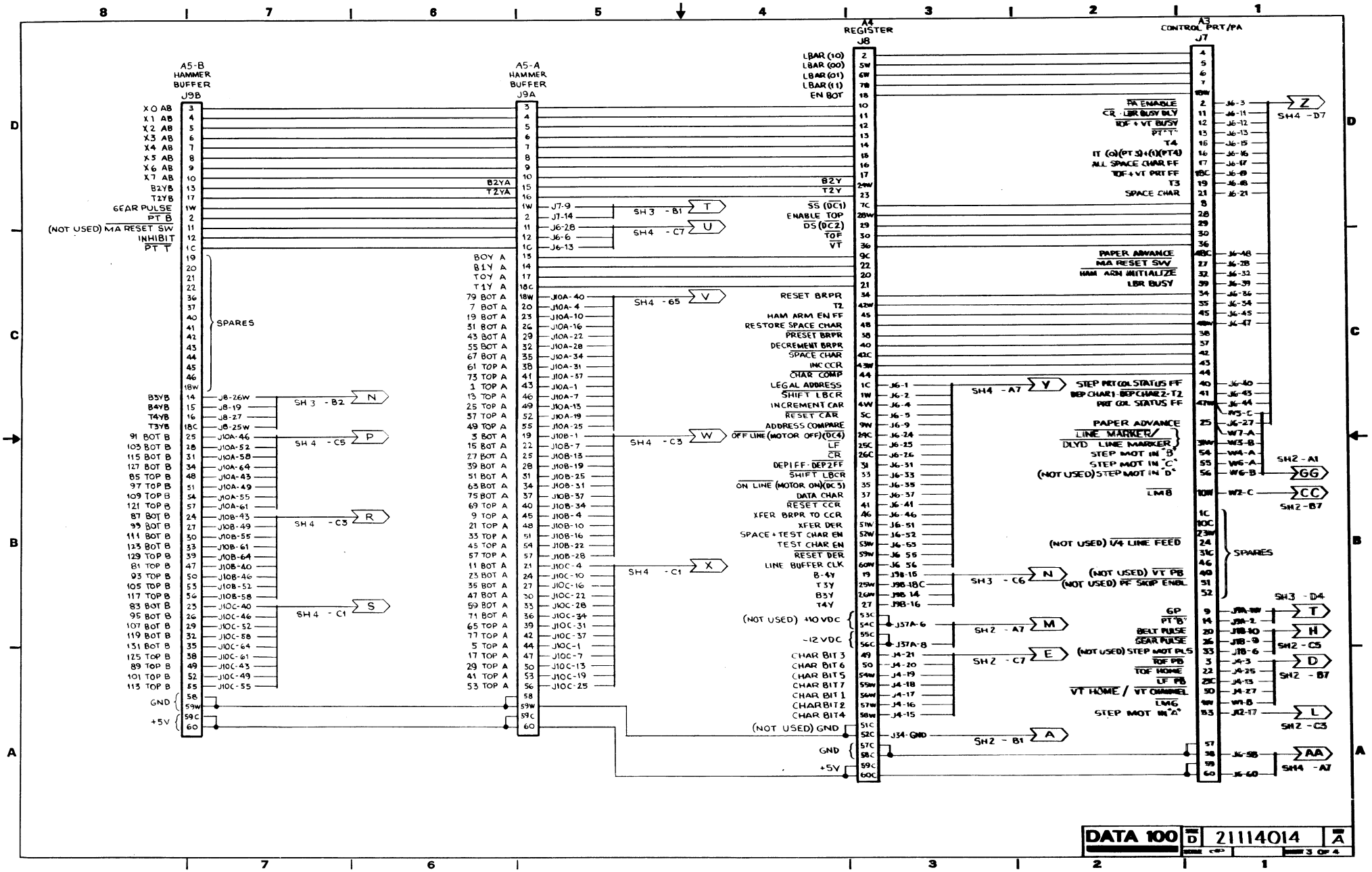
A5-B HAMMER BUFFER J9B
A5-A HAMMER BUFFER J9A
A4 REGISTER J8
A3 CONTROL PRT/PA J7
X0 AB
X1 AB
X2 AB
X3 AB
X4 AB
X5 AB
X6 AB
X7 AB
B2YB
T2YB
GEAR PULSE
PT B
(NOT USED) MA RESET SW
INHIBIT
PT T
SPARES
B3YB
B4YB
T4YB
T3YB
91 BOT B
103 BOT B
115 BOT B
127 BOT B
85 TOP B
97 TOP B
109 TOP B
121 TOP B
87 BOT B
99 BOT B
111 BOT B
123 BOT B
129 TOP B
81 TOP B
93 TOP B
105 TOP B
117 TOP B
83 BOT B
95 BOT B
107 BOT B
119 BOT B
131 BOT B
125 TOP B
89 TOP B
101 TOP B
113 TOP B
GND
+5V
B2YA
T2YA
BOY A
B1Y A
TOY A
T1Y A
79 BOT A
7 BOT A
19 BOT A
31 BOT A
43 BOT A
55 BOT A
67 BOT A
61 TOP A
73 TOP A
1 TOP A
13 TOP A
25 TOP A
37 TOP A
49 TOP A
3 BOT A
15 BOT A
27 BOT A
39 BOT A
51 BOT A
63 BOT A
75 BOT A
69 TOP A
9 TOP A
21 TOP A
33 TOP A
45 TOP A
57 TOP A
11 BOT A
23 BOT A
35 BOT A
47 BOT A
59 BOT A
71 BOT A
65 TOP A
77 TOP A
5 TOP A
17 TOP A
29 TOP A
41 TOP A
53 TOP A
LBAR (10)
LBAR (00)
LBAR (01)
LBAR (11)
EN BOT
B2Y
T2Y
SS (DC1)
ENABLE TOP
DS (DC2)
TOF
VT
RESET BRPR
T2
HAM ARM EN FF
RESTORE SPACE CHAR
PRESET BRPR
DECREMENT BRPR
SPACE CHAR
INC CCR
CHAR COMP
LEGAL ADDRESS
SHIFT LBCR
INCREMENT CAR
RESET CAR
ADDRESS COMPARE
OFF LINE (MOTOR OFF) (DC4)
LF
CR
DEP1FF: DEP2FF
SHIFT LBCR
ON LINE (MOTOR ON) (DC5)
DATA CHAR
RESET CCR
XFER BRPR TO CCR
XFER DER
SPACE + TEST CHAR EN
TEST CHAR EN
RESET DER
LINE BUFFER CLK
B-4Y
T3Y
B3Y
T4Y
(NOT USED) +10 VDC
-12 VDC
CHAR BIT 3
CHAR BIT 6
CHAR BIT 5
CHAR BIT 7
CHAR BIT 1
CHAR BIT 2
CHAR BIT 4
(NOT USED) GND
GND
+5V
PA ENABLE
CR : LBR BUSY OLY
TOF + VT BUSY
PT "T"
T4
IT (Q)(PT 3)+(1)(PT4)
ALL SPACE CHAR FF
TOF + VT PRT FF
T3
SPACE CHAR
PAPER ADVANCE
MA RESET SW
HAM ARM INITIALIZE
LBR BUSY
STEP PRT COL STATUS FF
DEP CHAR1 - DEP CHAR2 - T2
PRT COL STATUS FF
PAPER ADVANCE
LINE MARKER/
DLYD LINE MARKER
STEP MOT IN "B"
STEP MOT IN "C"
(NOT USED) STEP MOT IN "D"
LMB
(NOT USED) 1/4 LINE FEED
(NOT USED) VT PB
(NOT USED) PF SKIP ENBL
GP
PT "B"
BELT PULSE
GEAR PULSE
(NOT USED) STEP MOT PLS
TOF PB
TOF HOME
LF PB
VT HOME / VT CHANNEL
LMG
STEP MOT IN "A"
SPARES
SH3 - B1
SH4 - C7
SH4 - 65
SH4 - C3
SH4 - C1
SH3 - B2
SH4 - C5
SH4 - A7
SH3 - C6
SH2 - A7
SH2 - C7
SH2 - B1
SH3 - D4
SH2 - C5
SH2 - B7
SH2 - A1
SH4 - D7
SH4 - A7
T
U
V
W
X
N
P
R
S
Y
Z
M
E
A
GG
CC
H
D
L
AA
DATA 100
D
21114014
A
3 OF 4

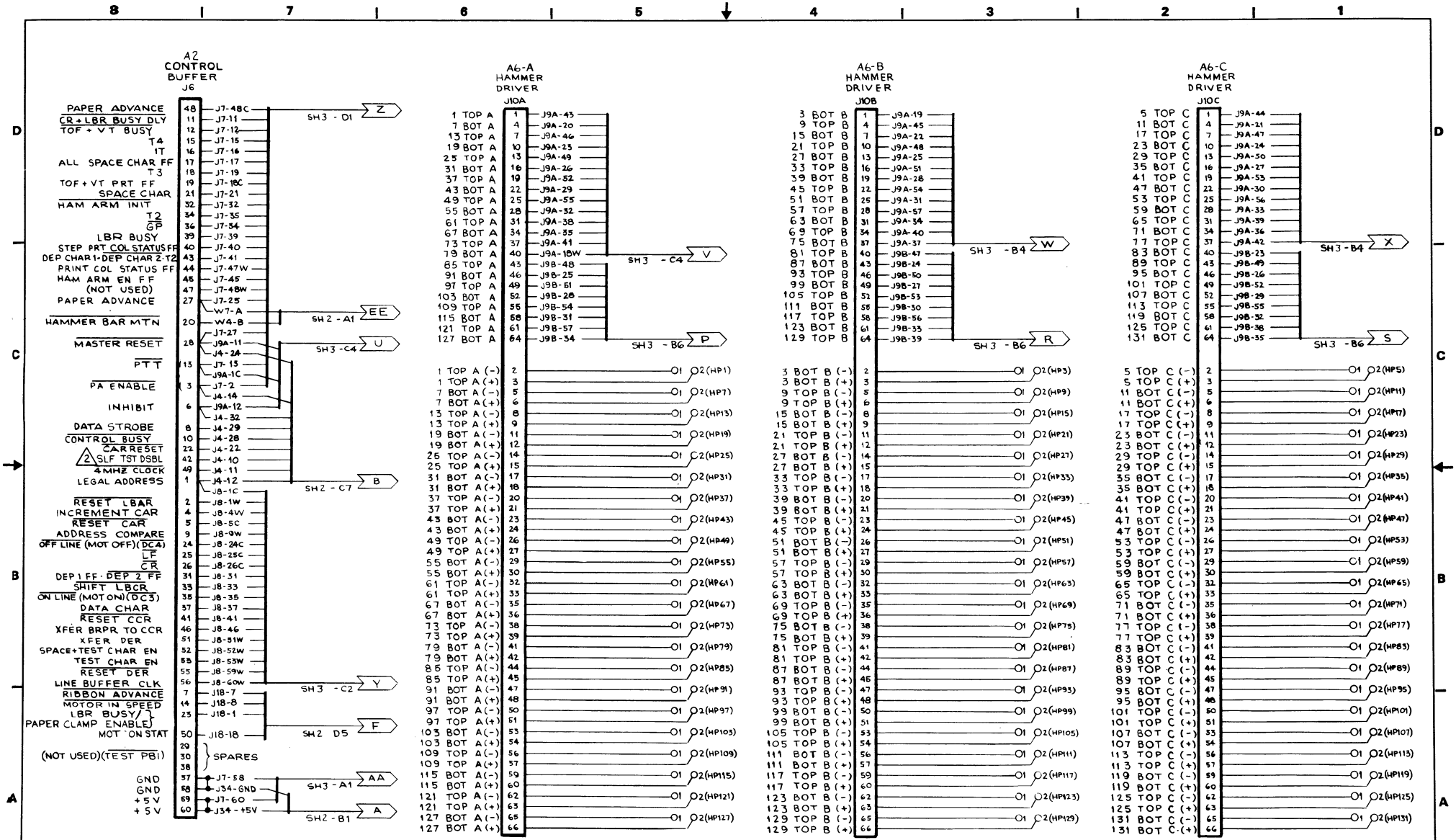
A2 CONTROL BUFFER J6
A6-A HAMMER DRIVER J10A
A6-B HAMMER DRIVER J10B
A6-C HAMMER DRIVER J10C
PAPER ADVANCE
CR + LBR BUSY DLY
TOF + VT BUSY
T4
1T
ALL SPACE CHAR FF
T3
TOF + VT PRT FF
SPACE CHAR
HAM ARM INIT
T2
GP
LBR BUSY
STEP PRT COL STATUS FF
DEP CHAR 1 · DEP CHAR 2 · T2
PRINT COL STATUS FF
HAM ARM EN FF
(NOT USED)
PAPER ADVANCE
HAMMER BAR MTN
MASTER RESET
PTT
PA ENABLE
INHIBIT
DATA STROBE
CONTROL BUSY
CARRESET
SLF TST DSBL
4 MHZ CLOCK
LEGAL ADDRESS
RESET LBAR
INCREMENT CAR
RESET CAR
ADDRESS COMPARE
OFF LINE (MOT OFF) (DC4)
LF
CR
DEP 1 FF · DEP 2 FF
SHIFT LBCR
ON LINE (MOT ON) (DC3)
DATA CHAR
RESET CCR
XFER BRPR TO CCR
XFER DER
SPACE + TEST CHAR EN
TEST CHAR EN
RESET DER
LINE BUFFER CLK
RIBBON ADVANCE
MOTOR IN SPEED
LBR BUSY/
PAPER CLAMP ENABLE
MOT ON STAT
(NOT USED) (TEST PB1)
SPARES
GND
GND
+5V
+5V
SH3 - D1
SH2 - A1
SH3 - C4
SH2 - C7
SH3 - C2
SH2 D5
SH3 - A1
SH2 - B1
SH3 - B6
SH3 - B4
DATA 100
SIZE D
21114014
REV A
SCALE C-40
SHEET 4 OF 4

| REVISIONS | | | | | |
|---|---|---|---|---|---|
| ECO | SYM | DESCRIPTION | DR | DATE | APPROVED |
| 0 | A | DEN DR 00218 | GDG | 5-9-77 | T. Hagerty |

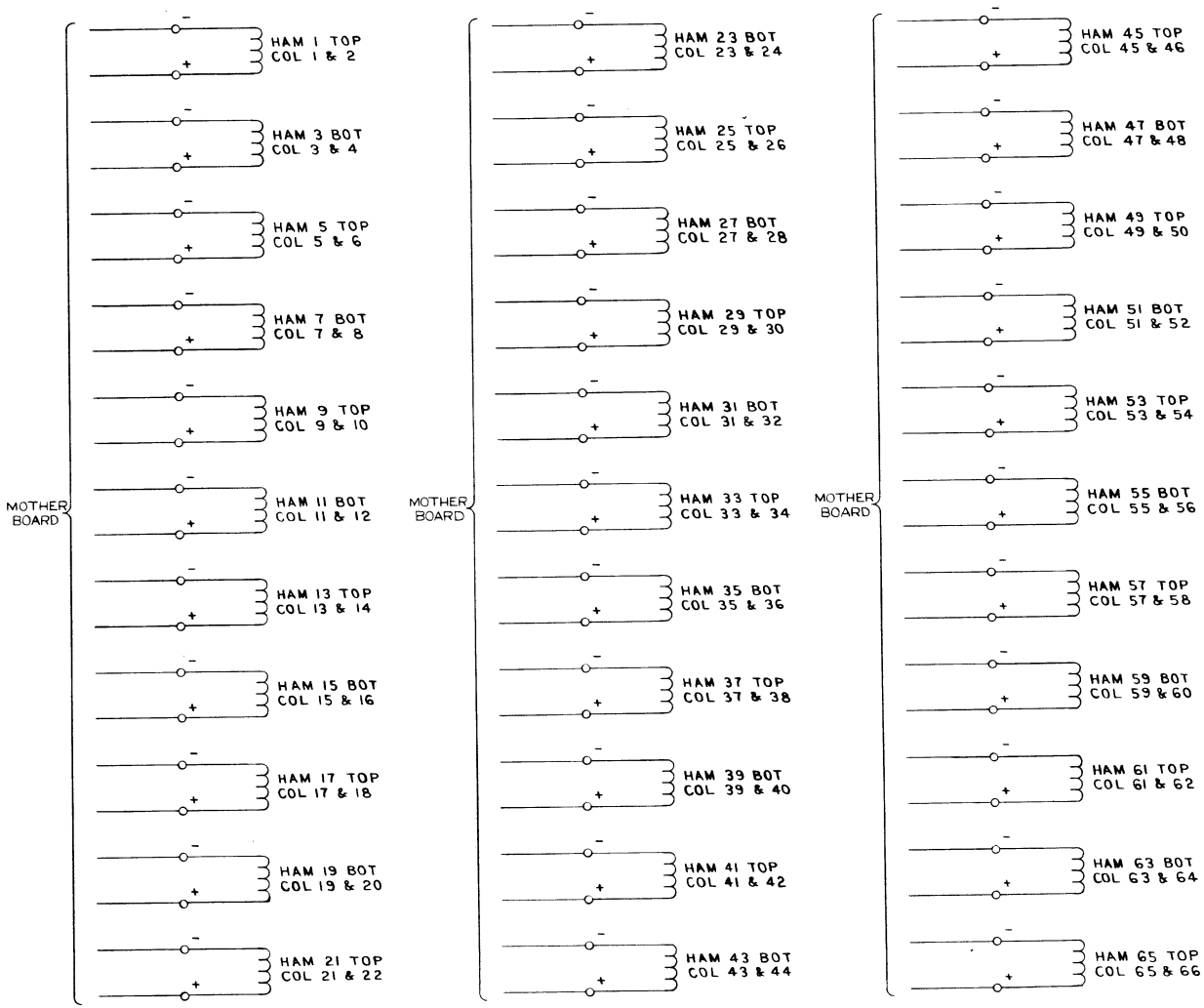


UNLESS OTHERWISE SPECIFIED DIMENSIONS ARE IN INCHES TOLERANCES ON DECIMALS: .XX ±, .XXX ±, ANGLES: ±, FRACTIONS: ±

MATERIAL

FINISH

DR P. Gaslin 11-1-72
CHK
APP
APP
APP
Ken Pag. 5-9-77 DR

NEXT ASSY

**DATA 100**

HAMMER INTERCONNECTION DIAGRAM

SIZE D | 21114017 | REV A

SCALE NONE | 1 OF 2 | SHEET

610099-A-1

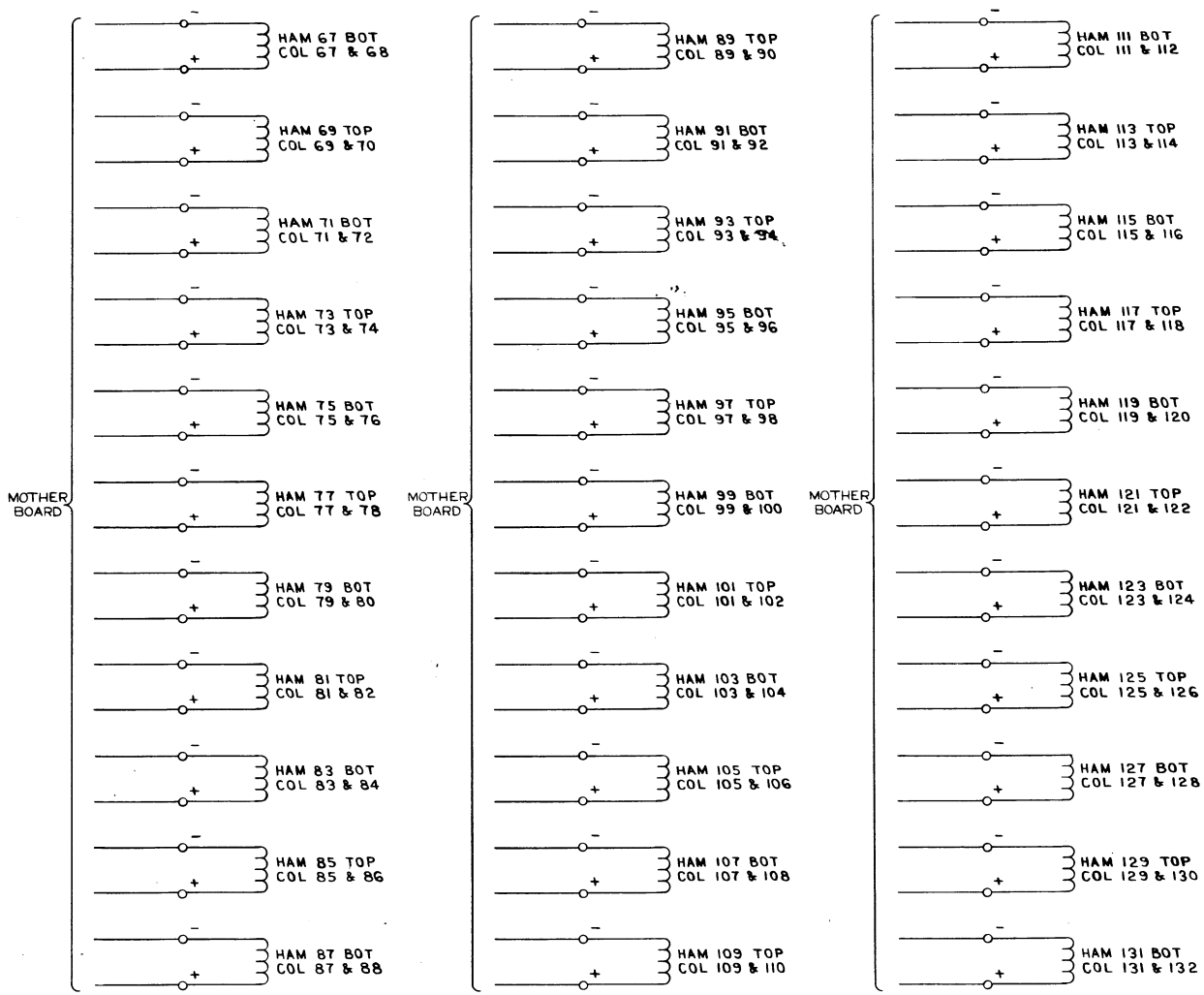


| DATA 80 | SIZE D | 21114017 | REV A |
|---|---|---|---|
| | SCALE NONE | 2 OF 2 | SHEET |
| | DR | | 1 |

NOTES:
1. USE FOR 200-240 VAC ONLY.
2. PLUG USED FOR 115 V ONLY.
NO PLUG FOR 200-240 VAC.

P1 WIRING - PIN 1 - 5-18 GND
PIN 2 0-18 AC RTN
PIN 3 9-18 AC HOT

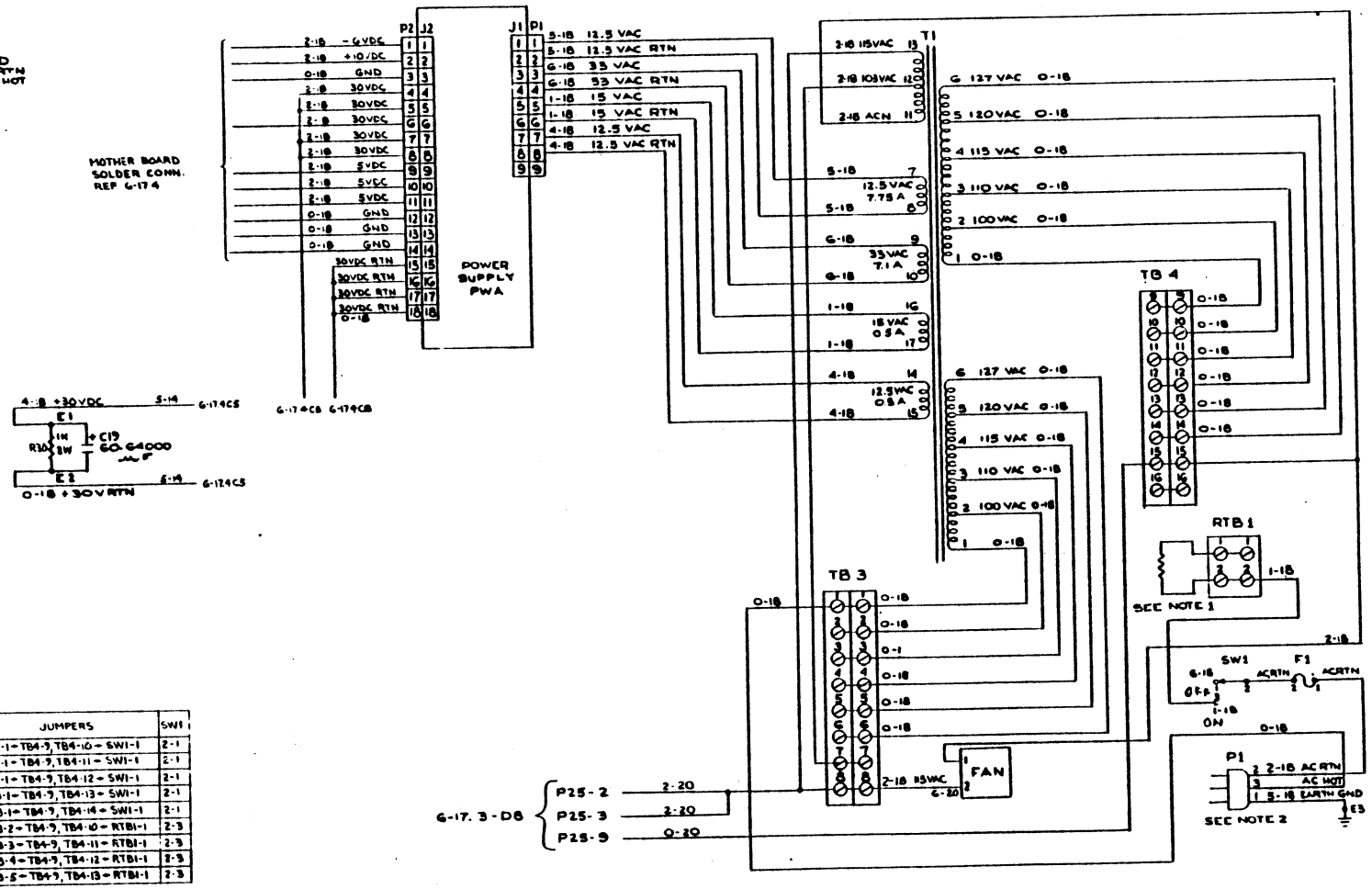


| LINE VOLTAGE | LINE CONN TB3/TB4 LO | HI | JUMPERS | SW1 |
|---|---|---|---|---|
| 100 | 1 | 2 | TB3-1 - TB4-9, TB4-10 - SW1-1 | 2-1 |
| 110 | 1 | 3 | TB3-1 - TB4-9, TB4-11 - SW1-1 | 2-1 |
| 115 | 1 | 4 | TB3-1 - TB4-9, TB4-12 - SW1-1 | 2-1 |
| 120 | 1 | 5 | TB3-1 - TB4-9, TB4-13 - SW1-1 | 2-1 |
| 127 | 1 | 6 | TB3-1 - TB4-9, TB4-14 - SW1-1 | 2-1 |
| 200 | 1 | 10 | TB3-2 - TB4-9, TB4-10 - RTB1-1 | 2-3 |
| 220 | 1 | 11 | TB3-3 - TB4-9, TB4-11 - RTB1-1 | 2-3 |
| 230 | 1 | 12 | TB3-4 - TB4-9, TB4-12 - RTB1-1 | 2-3 |
| 240 | 1 | 13 | TB3-5 - TB4-9, TB4-13 - RTB1-1 | 2-3 |

POWER SUPPLY INTER CONNECTION
D 21114032
SCALE | 1 OF 1 | SHEET 6-17.7

SECTION 6.17

7310 6-17.7

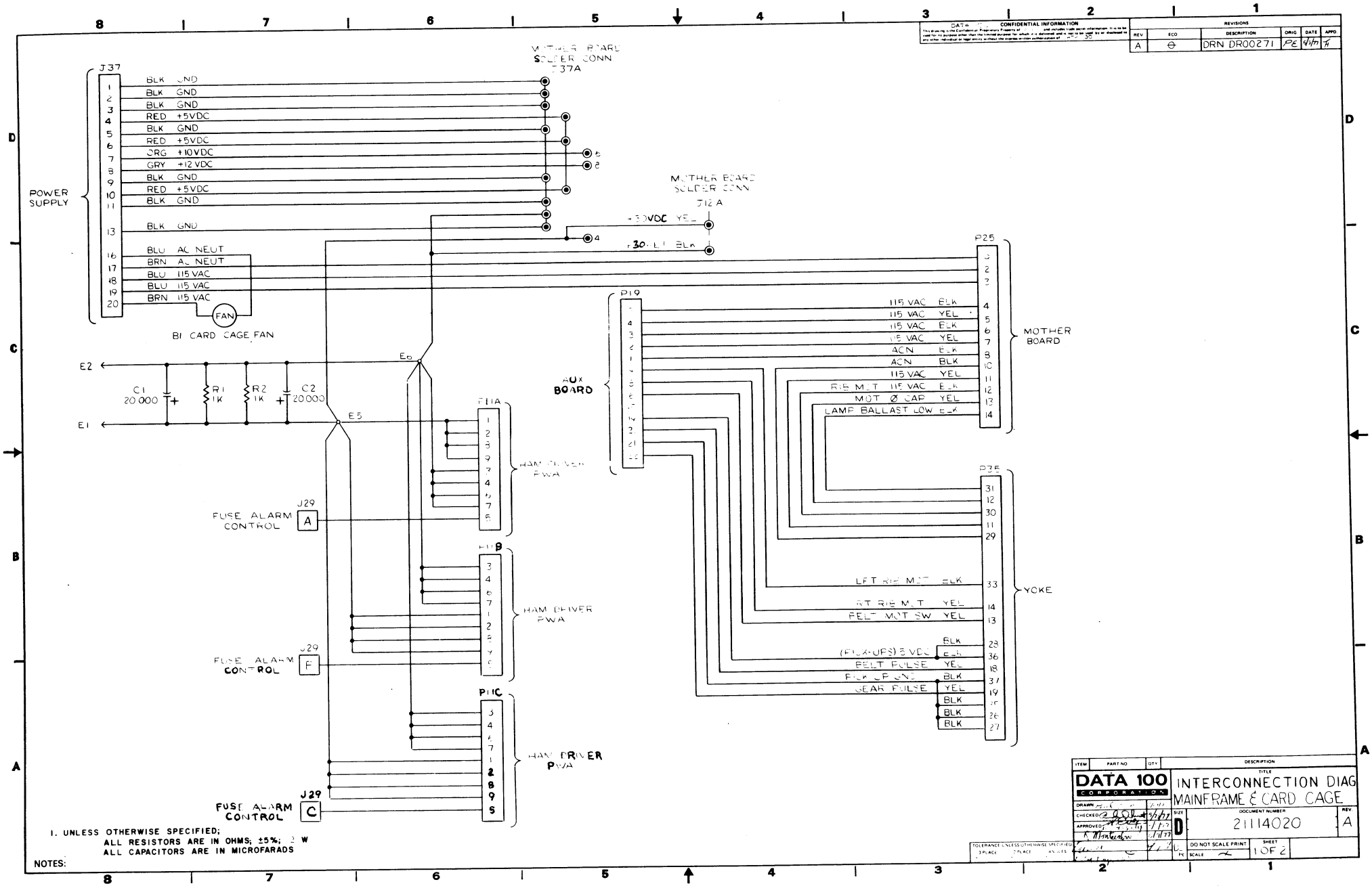


NOTES:

1. UNLESS OTHERWISE SPECIFIED;
   ALL RESISTORS ARE IN OHMS; ±5%; 2 W
   ALL CAPACITORS ARE IN MICROFARADS

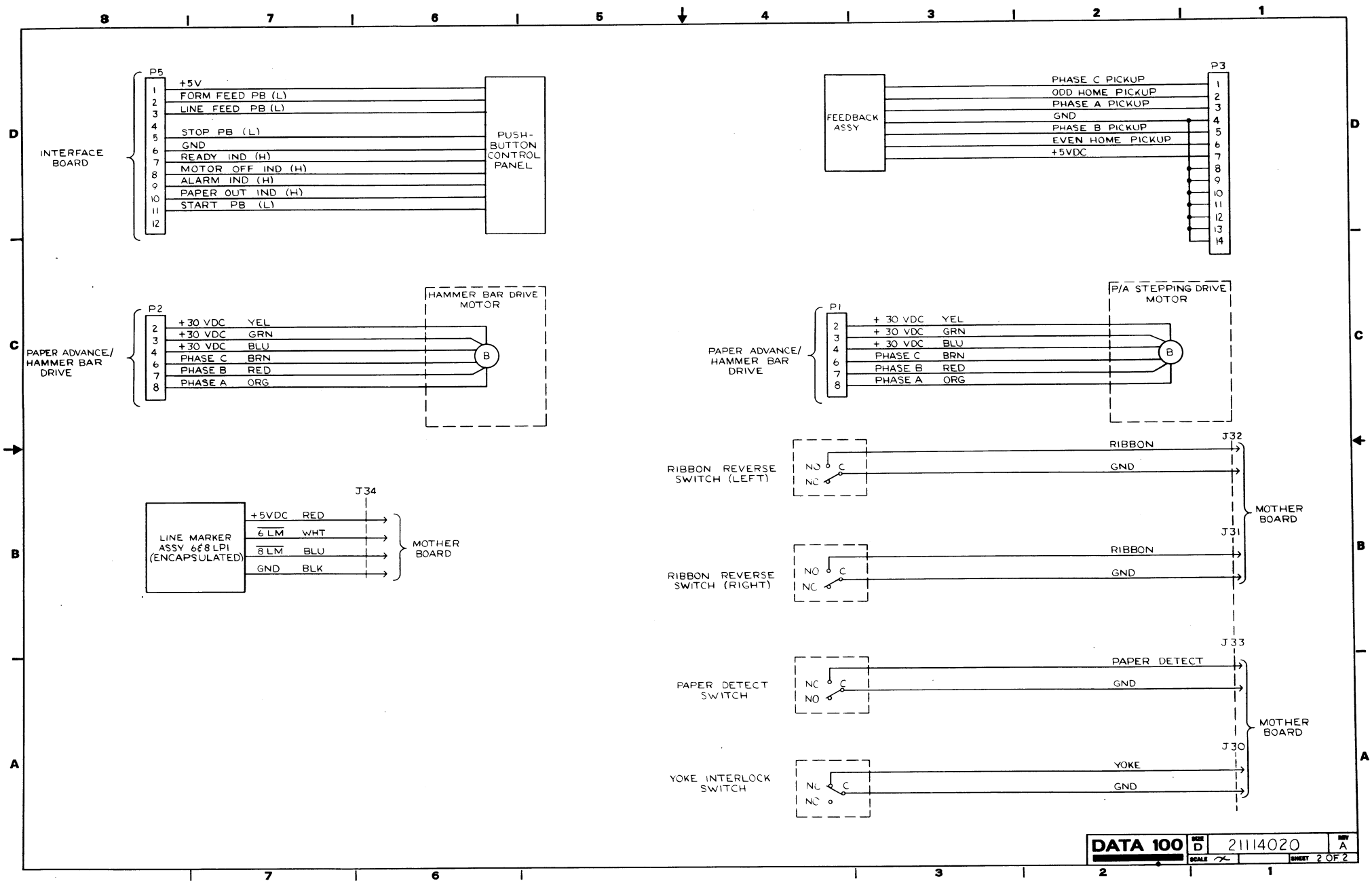
INTERFACE BOARD
P5
+5V
FORM FEED PB (L)
LINE FEED PB (L)
STOP PB (L)
GND
READY IND (H)
MOTOR OFF IND (H)
ALARM IND (H)
PAPER OUT IND (H)
START PB (L)
PUSH-BUTTON CONTROL PANEL
FEEDBACK ASSY
P3
PHASE C PICKUP
ODD HOME PICKUP
PHASE A PICKUP
GND
PHASE B PICKUP
EVEN HOME PICKUP
+5VDC
PAPER ADVANCE/ HAMMER BAR DRIVE
P2
+30 VDC YEL
+30 VDC GRN
+30 VDC BLU
PHASE C BRN
PHASE B RED
PHASE A ORG
HAMMER BAR DRIVE MOTOR
B
PAPER ADVANCE/ HAMMER BAR DRIVE
P1
+30 VDC YEL
+30 VDC GRN
+30 VDC BLU
PHASE C BRN
PHASE B RED
PHASE A ORG
P/A STEPPING DRIVE MOTOR
B
LINE MARKER ASSY 6&8 LPI (ENCAPSULATED)
J34
+5VDC RED
6 LM WHT
8 LM BLU
GND BLK
MOTHER BOARD
RIBBON REVERSE SWITCH (LEFT)
NO C
NC
J32
RIBBON
GND
MOTHER BOARD
RIBBON REVERSE SWITCH (RIGHT)
NO C
NC
J31
RIBBON
GND
PAPER DETECT SWITCH
NC C
NO
J33
PAPER DETECT
GND
MOTHER BOARD
YOKE INTERLOCK SWITCH
NC C
NC
J30
YOKE
GND
DATA 100
SIZE D
21114020
REV A
SCALE
SHEET 2 OF 2

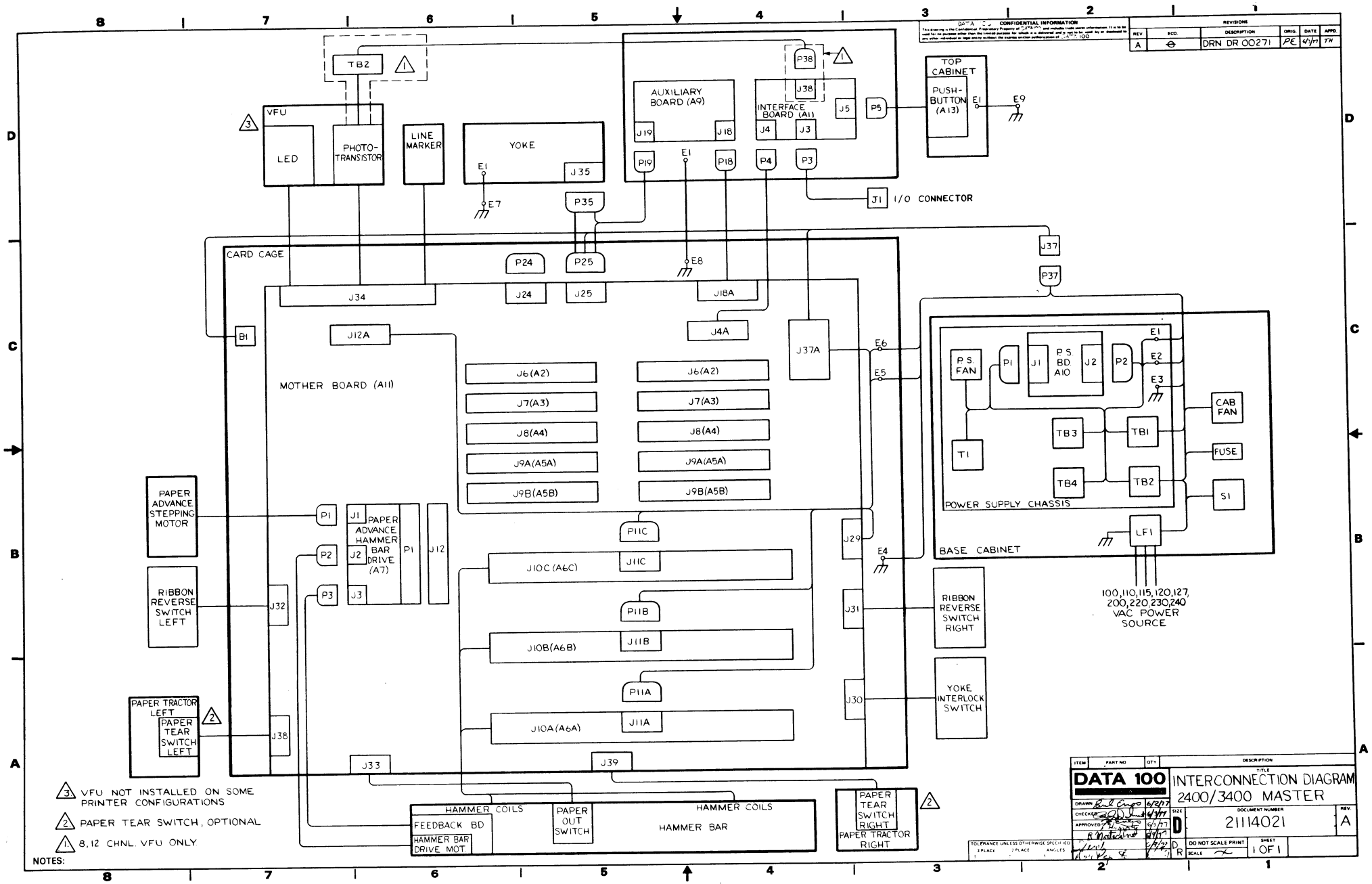
TB2
VFU
LED
PHOTO-TRANSISTOR
LINE MARKER
YOKE
J35
E1
E7
P35
AUXILIARY BOARD (A9)
J19
J18
P19
P18
INTERFACE BOARD (A1)
P38
J38
J4
J3
J5
P4
P3
P5
TOP CABINET
PUSH-BUTTON (A13)
E9
J1
I/O CONNECTOR
CARD CAGE
P24
P25
E8
J34
J24
J25
J18A
J37
P37
B1
J12A
J4A
J37A
E6
E5
MOTHER BOARD (A11)
J6(A2)
J7(A3)
J8(A4)
J9A(A5A)
J9B(A5B)
P.S. FAN
P1
J1
P.S. BD. A10
J2
P2
E1
E2
E3
CAB FAN
TB3
TB1
FUSE
T1
TB4
TB2
S1
POWER SUPPLY CHASSIS
LF1
BASE CABINET
100,110,115,120,127, 200,220,230,240 VAC POWER SOURCE
PAPER ADVANCE STEPPING MOTOR
PAPER ADVANCE HAMMER BAR DRIVE (A7)
J12
P11C
J11C
J10C (A6C)
J29
E4
RIBBON REVERSE SWITCH LEFT
J32
P11B
J11B
J10B(A6B)
J31
RIBBON REVERSE SWITCH RIGHT
P11A
J11A
J10A(A6A)
J30
YOKE INTERLOCK SWITCH
PAPER TRACTOR LEFT
PAPER TEAR SWITCH LEFT
J38
J33
J39
HAMMER COILS
FEEDBACK BD
HAMMER BAR DRIVE MOT
PAPER OUT SWITCH
HAMMER BAR
PAPER TEAR SWITCH RIGHT
PAPER TRACTOR RIGHT
3 VFU NOT INSTALLED ON SOME PRINTER CONFIGURATIONS
2 PAPER TEAR SWITCH, OPTIONAL
1 8,12 CHNL VFU ONLY
NOTES:
DATA 100
INTERCONNECTION DIAGRAM 2400/3400 MASTER
DOCUMENT NUMBER 21114021
REV. A
SIZE D
SHEET 1 OF 1
DO NOT SCALE PRINT
TOLERANCE UNLESS OTHERWISE SPECIFIED
REVISIONS
REV A
DESCRIPTION DRN DR 00271
ORIG. PE
DATE 4/1/77
APPD. TN

# SECTION 7

# PARTS LIST

| SECTION | DESCRIPTION |
|---|---|
| 7.1 | Mother Board Assembly |
| 7.2 | Mother Board/Card Cage Assembly |
| 7.3 | Power Supply Chassis |
| 7.4 | Auxiliary Chassis Assembly |
| 7.5 | Front Panel Assembly |
| 7.6 | Cabinet Top Assembly |
| 7.7 | Yoke Assembly |
| 7.8 | Paper Clamp Assembly |
| 7.9 | Main Frame |
| 7.10 | Hammer Bar Assembly |
| 7.11 | Character Belt Assembly |
| 7.12 | Vertical Format Unit |

## ORDERING INFORMATION

This section contains parts lists for ordering replacement parts. The parts list contents are listed in numeric order by Find Number. Replacement parts may be obtained from DATA 100 at the following address:

DATA 100 (Warwick)
Hillsgrove Industrial Park
30 Plan Way
Warwick, Rhode Island 02888
Telephone: AC (401) 738-9500

All orders must be accompanied by a valid Purchase Order. When replacement parts, please furnish the following information:

a. Model Number
b. Serial Number
c. Part Number
d. Quantity of Part(s) Desired

Parts list for PCB Assemblies and Sub Assemblies are reflected in Section 6.0 accompanying the assembly drawings and schematics.

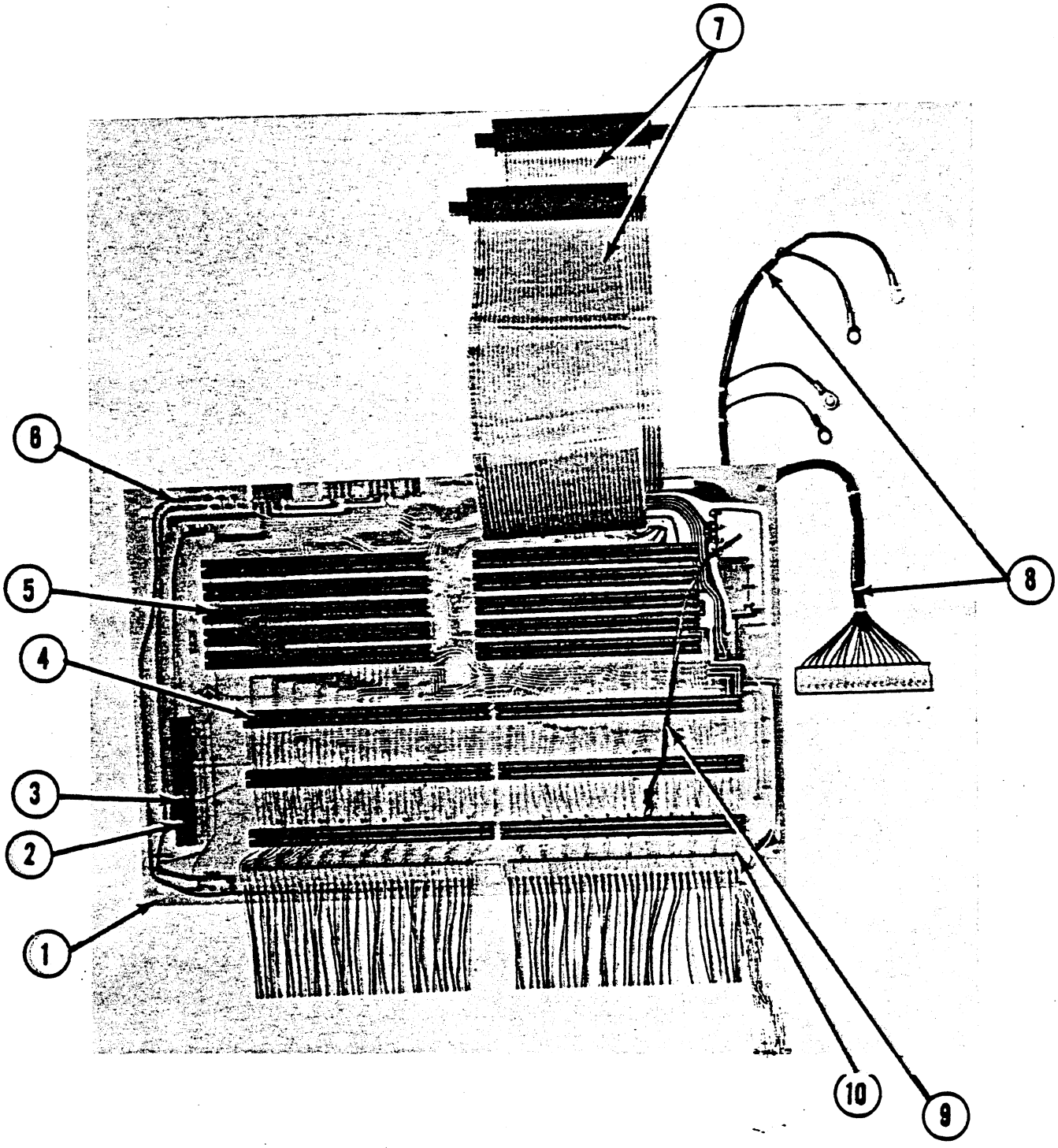


MOTHER BOARD ASSEMBLY

FIG. 7-1.1

FIG. 7-1.1

| PART № | FIND № | DESCRIPTION |
|---|---|---|
| 22284010-J005 | 1 | Mother Board Assembly |
| 56133206 | 2 | Connector |
| 56133215 | 3 | Keying Plug |
| 56133211 | 4 | Connector |
| 56133209 | 5 | Connector |
| 56235320 | 6 | Disconnect Terminal |
| 86130242 | 7 | Flatflex Cable Assembly |
| 86130294 | 8 | Harness Assembly |
| 86130375 | 9 | Ground Wire Assembly |
| 86130034 | 10 | Hammer Lead Assembly - Top |

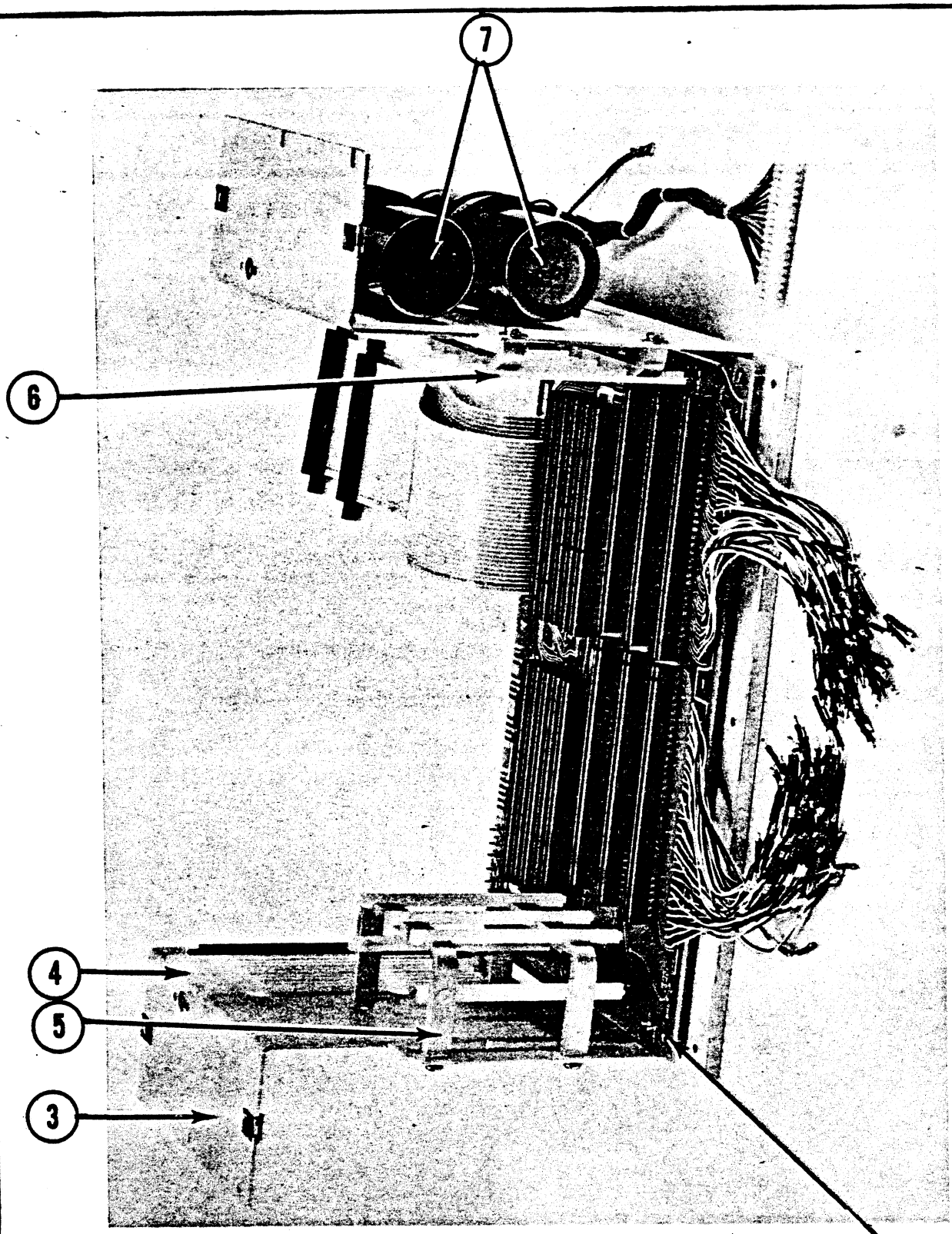


MOTHER BOARD/CARD CAGE ASSEMBLY

FIG. 7-2.1

FIG. 7-2.1

| PART Nº | FIND Nº | DESCRIPTION |
|---|---|---|
| 22284010-J005 | 2 | Mother Board Assembly |
| 86160107 | 3 | Card Cage Assembly |
| 61882134 | 4 | Card Guide |
| 67640512 | 5 | Card Guide Assembly - Left |
| 67640510 | 6 | Card Guide Assembly - Right |
| 52312379 | 7 | Capacitors |

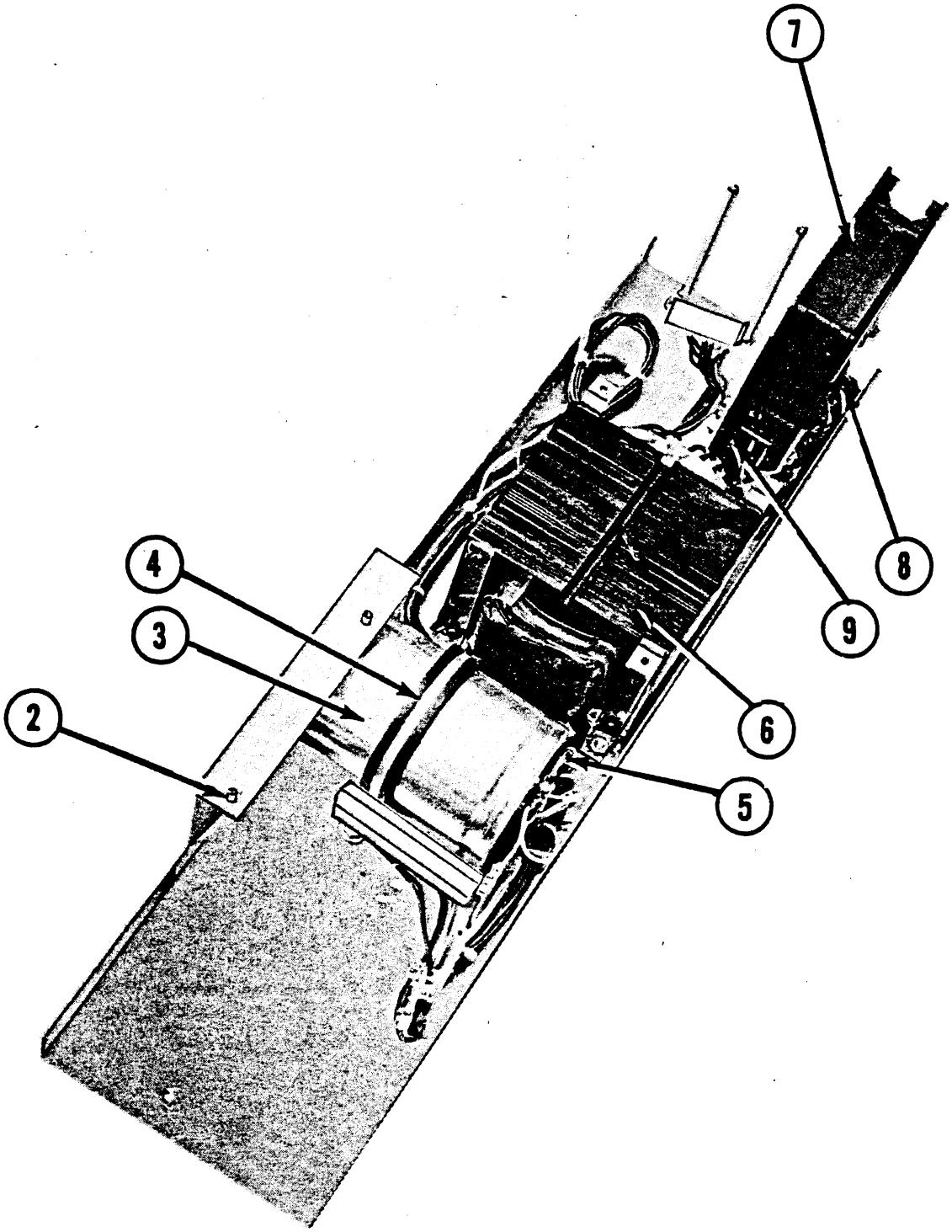


*POWER SUPPLY CHASSIS

FIG. 7-3.1

FIG. 7-3.1

| PART Nº | FIND Nº | DESCRIPTION |
|---|---|---|
| 86150040 | 1 | Power Supply and Chassis Assembly |
| 67640558 | 2 | Power Supply Chassis |
| 52312398 | 3 | Capacitor |
| 61824000 | 4 | Capacitor Clamp |
| 67640514 | 5 | Resistor Assembly |
| 86130327 | 6 | Transformer and Harness Assembly |
| 76311025 | 7 | Fan |
| 56247532 | 8 | Terminal Block Assembly TB3 |
| 56247533 | 9 | Terminal Block Assembly TB4 |

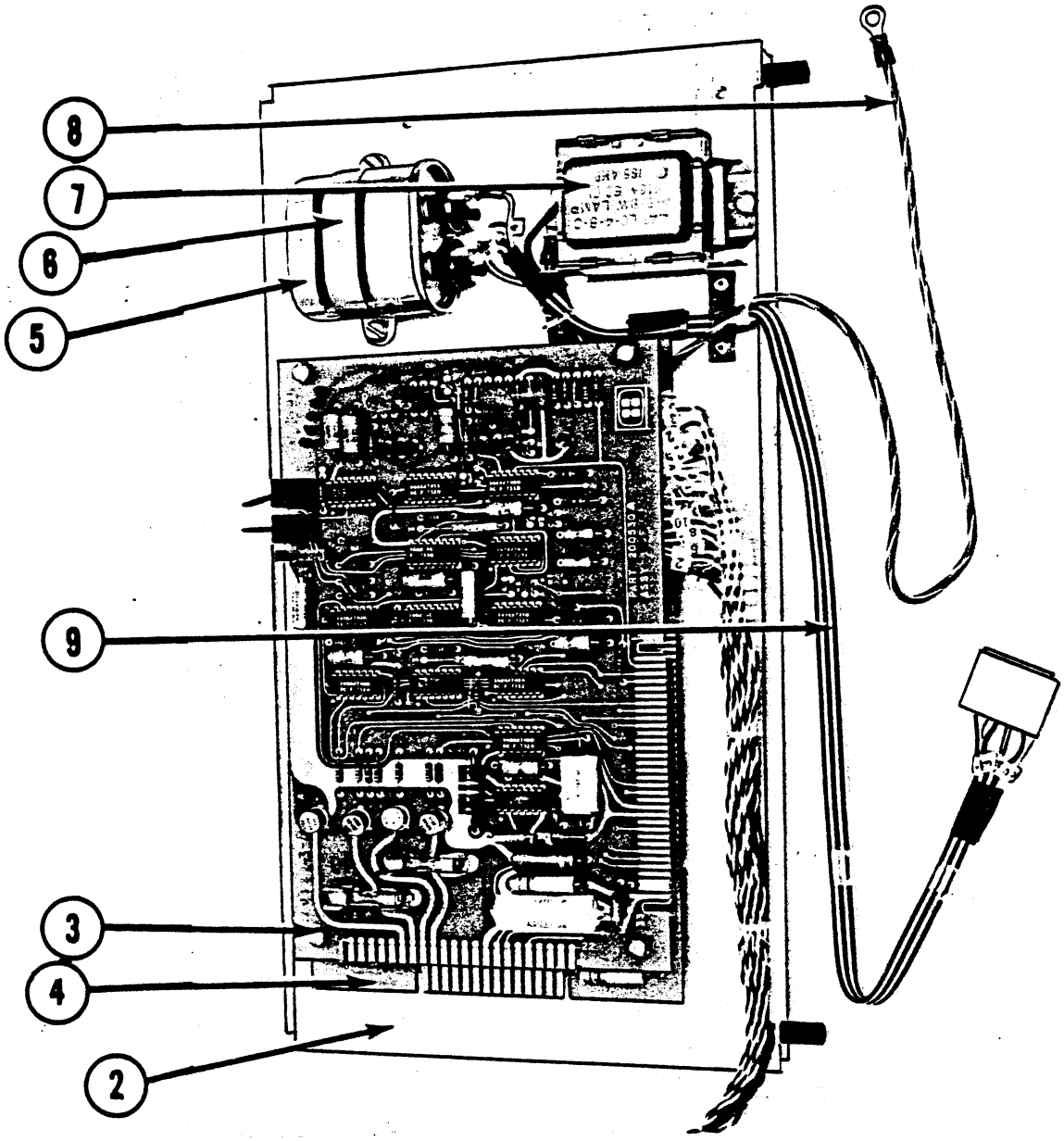


AUXILIARY CHASSIS ASSEMBLY

FIG. 7-4.1

FIG. 7-4.1

| PART № | FIND № | DESCRIPTION |
|---|---|---|
| 86160157 | 1 | Auxiliary Chassis Assembly |
| 67640464 | 2 | Chassis |
| Ref.Sect.6.10.1 | 3 | Auxiliary PCB Assembly |
| Ref.Sect. 6.2.1 | 4 | Interface PCB Assembly |
| 52154210 | 5 | Motor Phasing Capacitor 3UF |
| 61831262 | 6 | Capacitor Mounting Clamp |
| 57581000 | 7 | Ballast Transformer |
| 86130032 | 8 | Ground Wire Assembly |
| 86160154 | 9 | Harness Assembly |

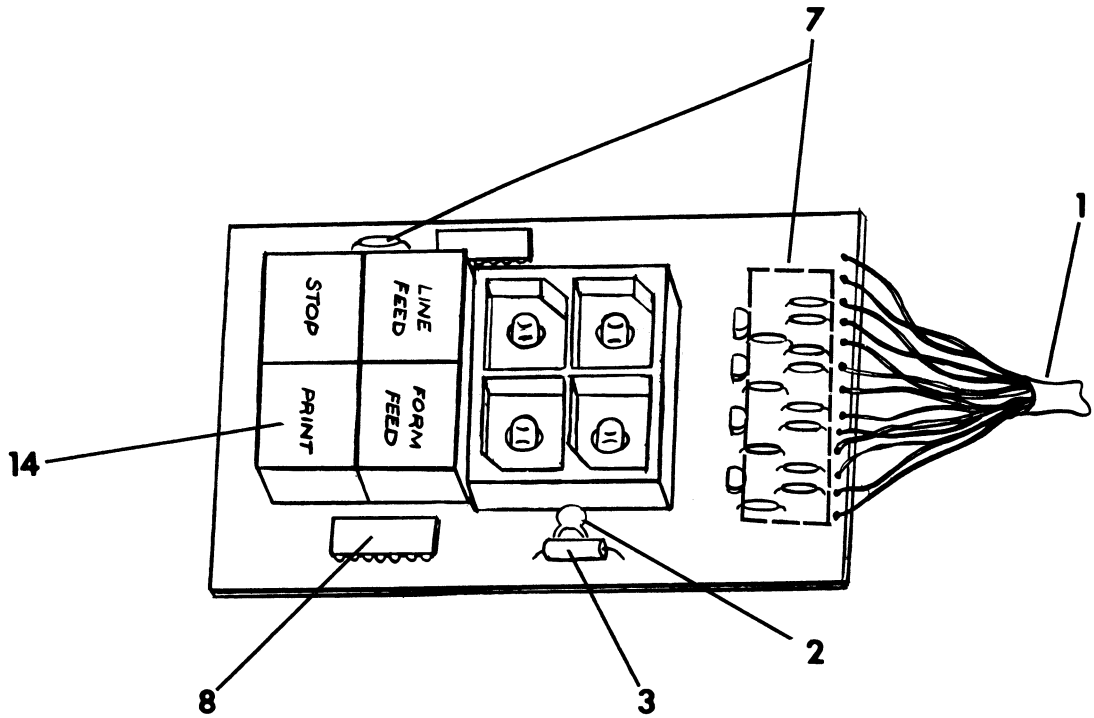


PUSHBUTTON BOARD AND HARNESS ASSY.

FIG. 7-5.1

FIG. 7-5.1

| PART № | FIND № | DESCRIPTION |
|---|---|---|
| 66040960 | -- | P.W. Board; Pushbutton (Annunciator); PH. II (bare board) |
| 86130313 | 1 | Cable Assembly; Pushbutton Board (W/connector installed) |
| 52252265 | 2 | Capacitor, .05 ufd, 12V; 20% |
| 52325127 | 3 | Capacitor, 40 ufd, Elect., Tantalum; 10WVDC, 10% |
| 67640552 | 4 | Contact; Lamp Pushbutton; Spring Copper (1 of 4) (Beaneath board assy) |
| 51320035 | 5 | I.C., Type SN74279 (S/R Latches) |
| 67640550 | 6 | Reflector, Lamp; Pushbutton |
| 54400271 | 7 | Resistor, 270 ohms, 1/4 W., 5% |
| 54400283 | 7 | Resistor, 820 ohms, 1/4 W., 5% |
| 54400285 | 7 | Resistor, 1.0K, 1/4 W., 5% |
| 54400481 | 7 | Resistor. 10.0K. 1/4 W., 5% |
| 54820046 | 8 | Resistor Network (DIP-PACK R); 1.0K |
| 61336258 | 9 | Screw, P.H., Tapping "F", 4-40X.312 inch |
| 67640551 | -- | Spacer, Lamp Pushbutton |
| 62511765 | 10 | Spring; LL-022C-4SS (1 of 8) |
| 71647214 | 11 | Switch; limit (micro-type) (1 of 4) |
| 51122330 | 12 | Transistor, Type 2N5369 (1 of 4) |
| 61221250 | 13 | Washer, flat., No. 4, Nylon |
| 61251106 | -- | Washer, lock, External tooth, No. 4 |
| (REF. ONLY) | 14 | Pushbutton (key top); 1 of 4 (Colors and legends vary depending upon configuration) |

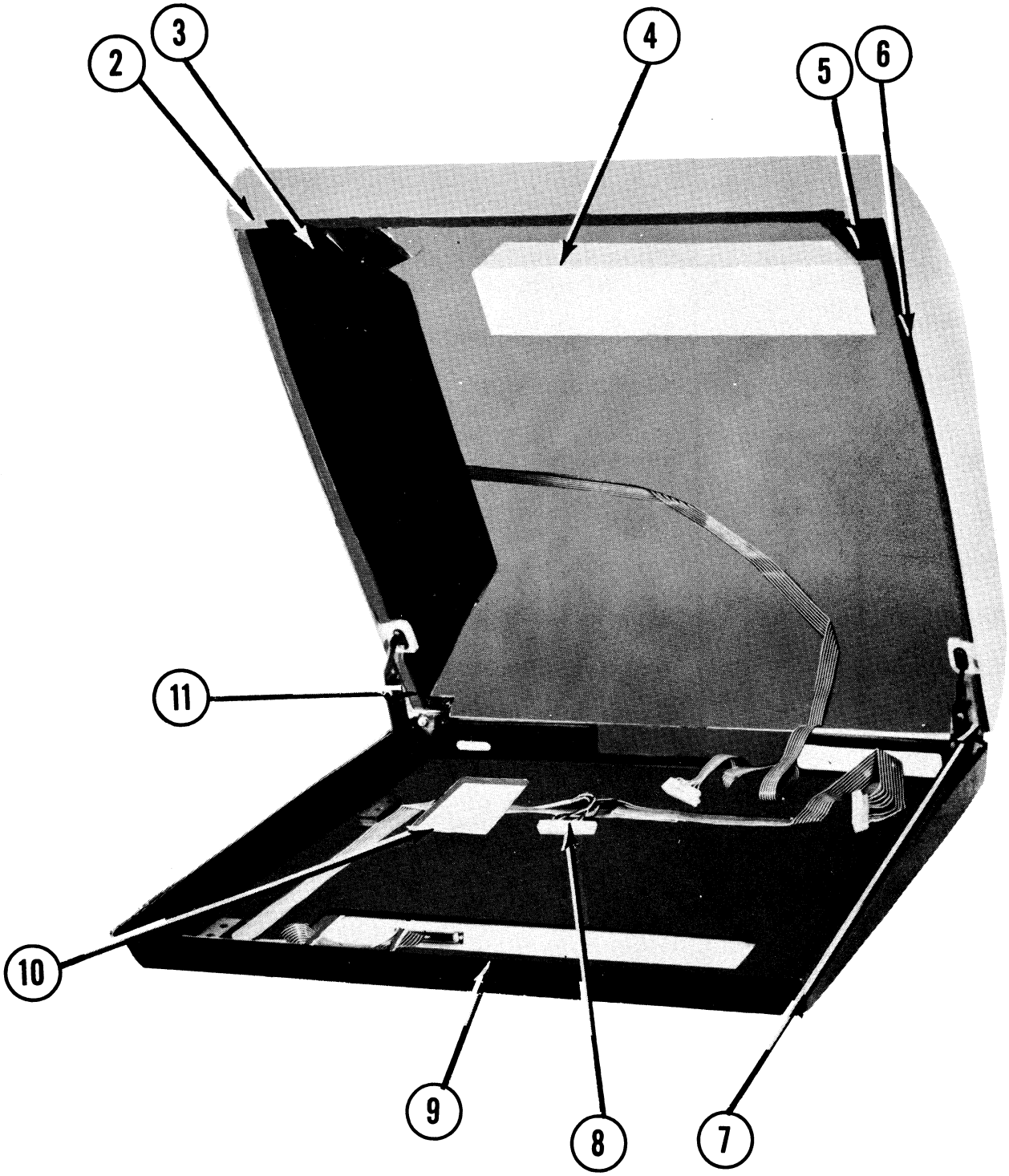


CABINET TOP ASSEMBLY

FIG. 7-6.1

FIG. 7-6.1

| PART Nº | FIND Nº | DESCRIPTION |
|---|---|---|
| 100953 | 1 | Cabinet Top Assembly |
| 67640890 | 2 | Cabinet Top |
| 67640826 | 3 | Foam, Left Side |
| 67640723 | 4 | Window |
| 67640529 | 5 | Cover, Push Button Board |
| 67640827 | 6 | Foam, Right Side |
| 67640005 | 7 | Lid Support (Right Side) |
| 86130268 | 8 | Yoke to Frame Cable |
| 67640831 | 9 | Cabinet Base |
| 76311025 | 10 | Fan |
| 67640006 | 11 | Lid Support, Left Side |

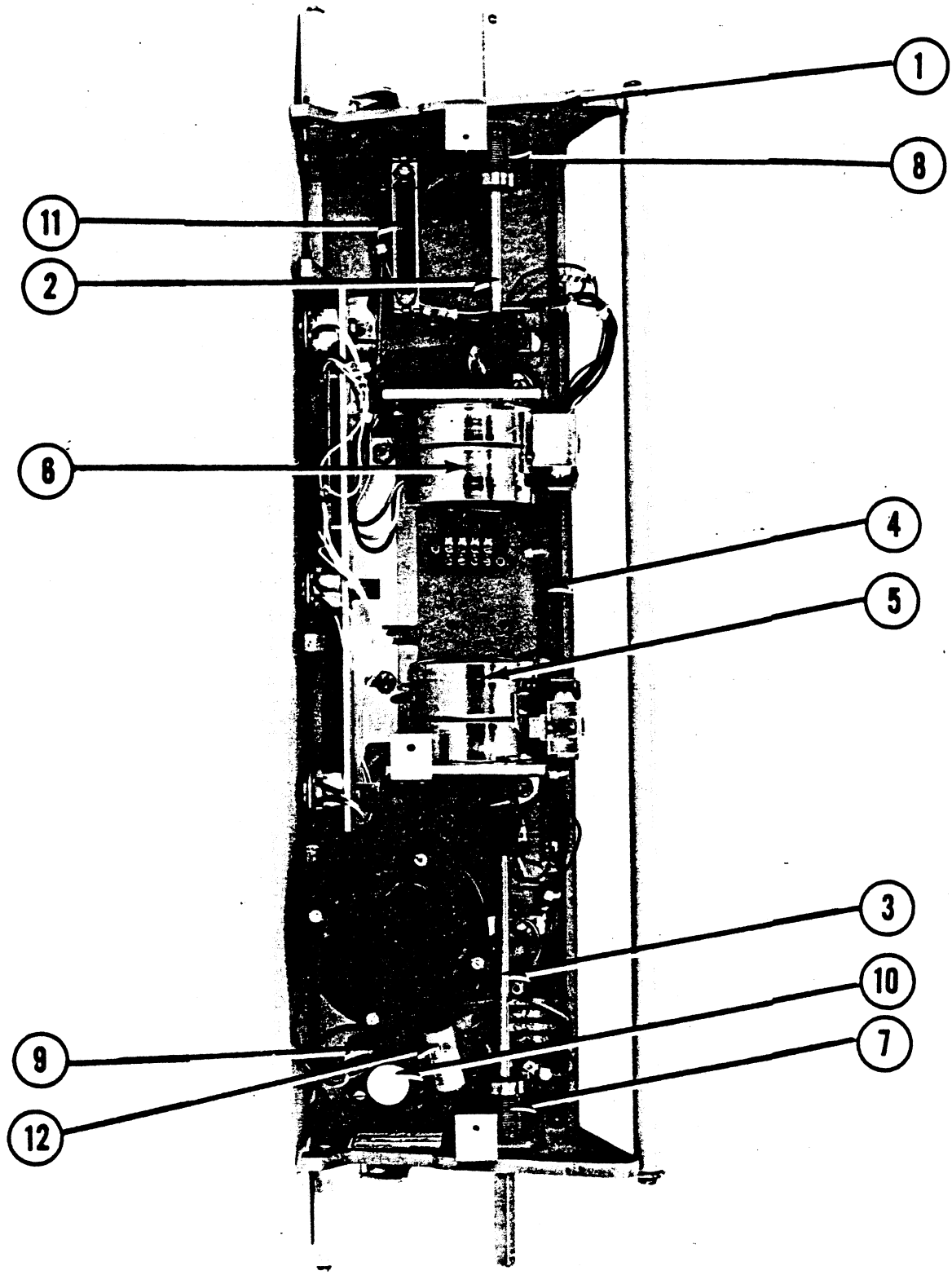


YOKE ASSEMBLY
FIG. 7-7.1

FIG. 7-7.1

| PART № | FIND № | DESCRIPTION |
|---|---|---|
| 31822021 | 1 | Yoke Assembly 60 Hz |
| 31822022 | 1 | Yoke Assembly 50 Hz |
| 86160198 | 2 | Shaft Assembly, Ribbon Drive (L.H.) |
| 86160197 | 3 | Shaft Assembly, Ribbon Drive (R.H.) |
| 86130385 | 4 | Yoke Harness Assembly |
| 86160192 | 5 | Ribbon Motor and Bracket Assembly (R.H.) |
| 86160193 | 6 | Ribbon Motor and Bracket Assembly (L.H.) |
| 86160195 | 7 | Ribbon Brake Assembly (R.H.) |
| 86160196 | 8 | Ribbon Brake Assembly (L.H.) |
| 57487200 | 9 | Socket, Starter |
| 57581001 | 10 | Starter |
| 56150727 | 11 | Pin Connector |
| 86160032 | 12 | Choke Assembly |

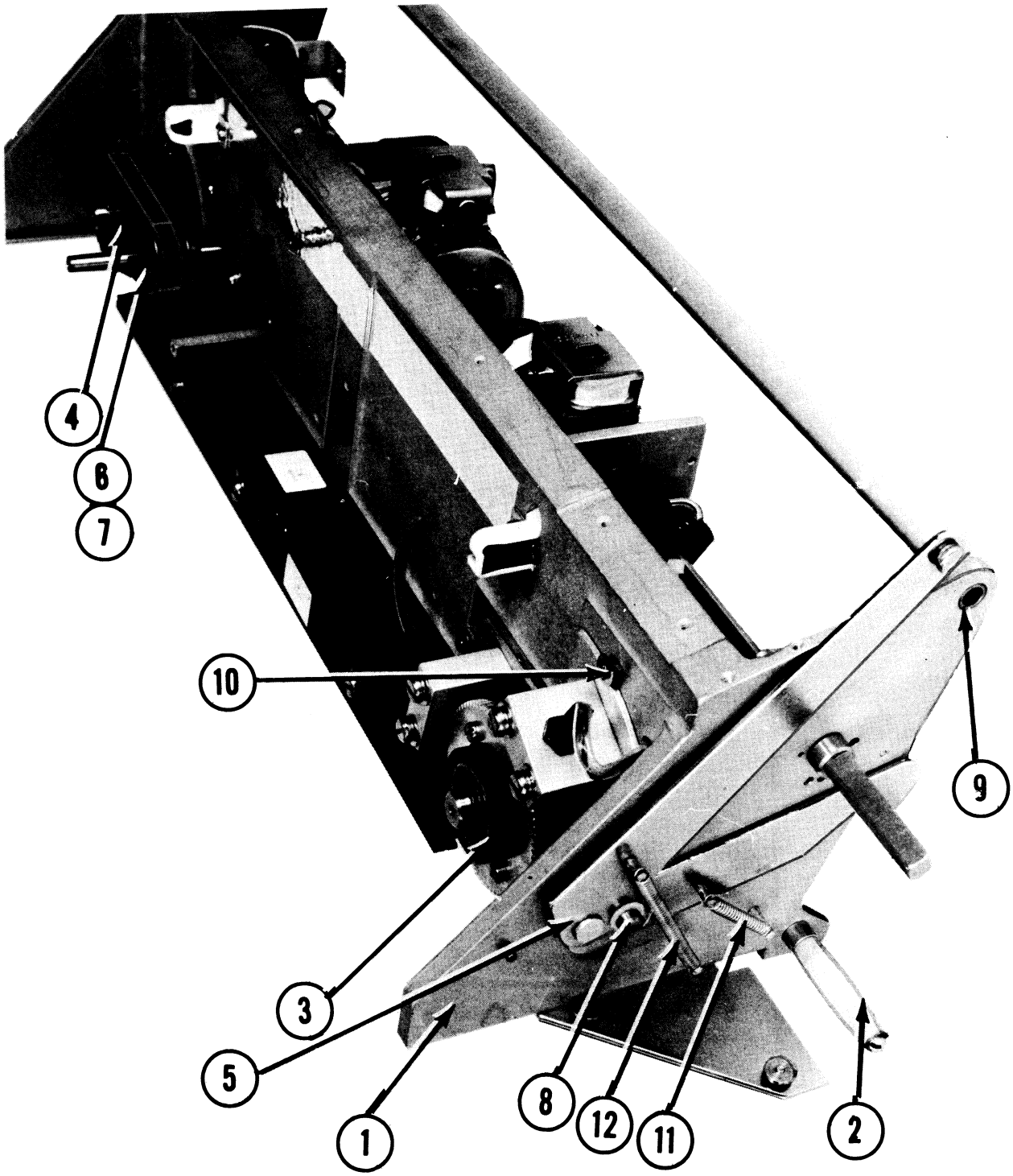


YOKE ASSEMBLY

FIG. 7-7.3

FIG. 7-7.3

| PART № | FIND № | DESCRIPTION |
|---|---|---|
| 31822021 | 1 | Yoke Assembly 60 Hz |
| 31822022 | 1 | Yoke Assembly 50 Hz |
| 86160043 | 2 | Ribbon Idler Assembly |
| 86160095 | 3 | Pulley Assembly, Character Belt (L.H.) |
| 86160094 | 4 | Pulley Assembly, Character Belt (R.H.) |
| 67640499 | 5 | Latch Arm and Pin Assembly (L.H.) |
| 62551106 | 6 | Pulley (60 Hz), 16XL |
| 62551109 | 7 | Pulley (50 Hz), 20XL |
| 615224002 | 8 | Shoulder Screw #PL-7 |
| 62322002 | 9 | Bearing Sleeve |
| 61843356 | 10 | Synclamp - Pickup Plate |
| 62511320 | 11 | Spring, Sm. Latch |
| 62511322 | 12 | Spring, Lg. Latch |

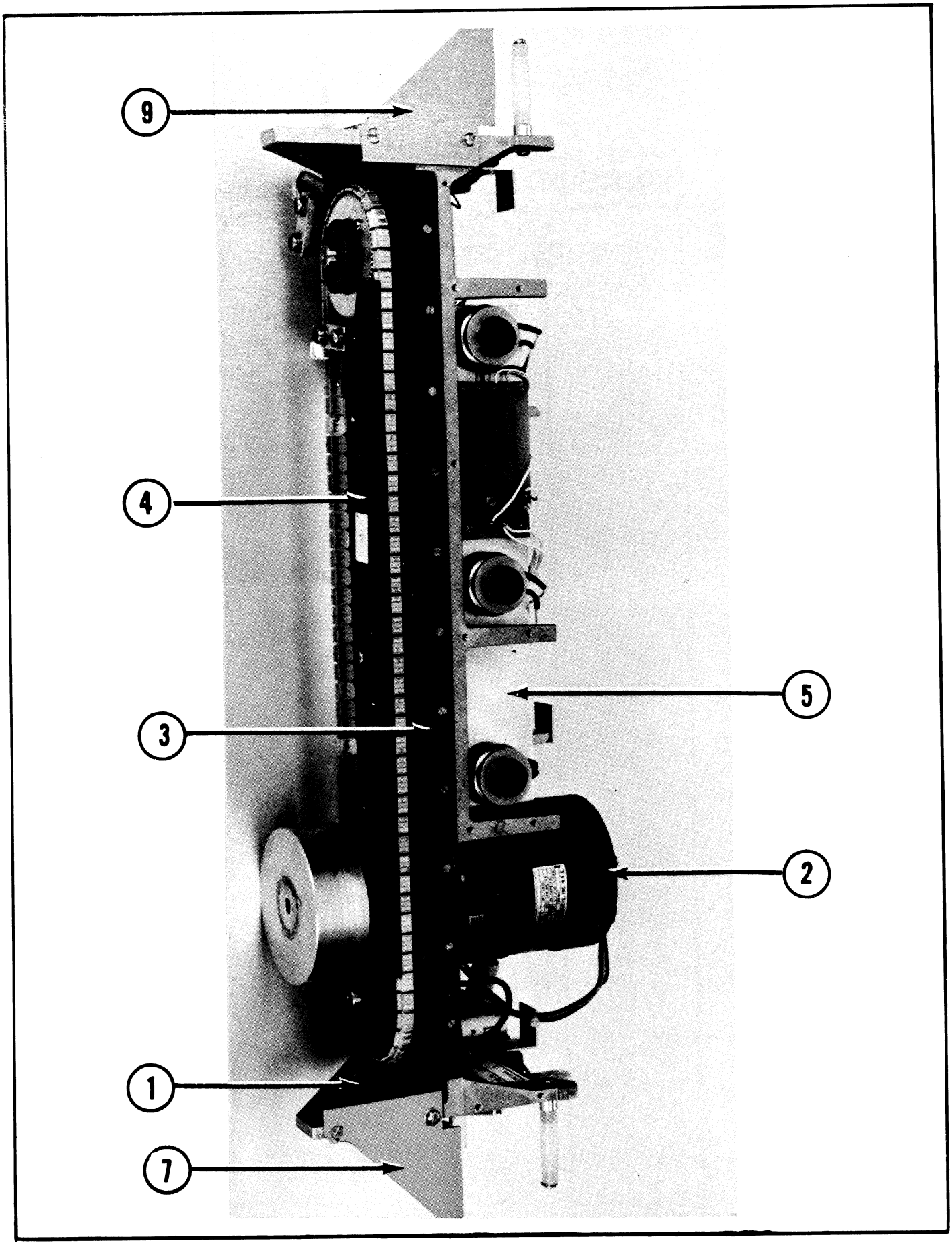


YOKE ASSEMBLY
FIG. 7-7.5

7511

FIG. 7-7.5

| PART № | FIND № | DESCRIPTION |
|---|---|---|
| 31822021 | 1 | Yoke Assembly 60 Hz |
| 31822022 | 1 | Yoke Assembly 50 Hz |
| 86160151 | 2 | Character Belt Motor Assembly |
| 67640246 | 3 | Guide, Belt (Front) |
| 67640435 | 4 | Top Guide, Belt |
| 86160191 | 5 | Paper Clamp Assembly |
| 86160030 | 6 | Ribbon Guide Assembly (L.H.) |
| 86160029 | 7 | Ribbon Guide Assembly (R.H.) |

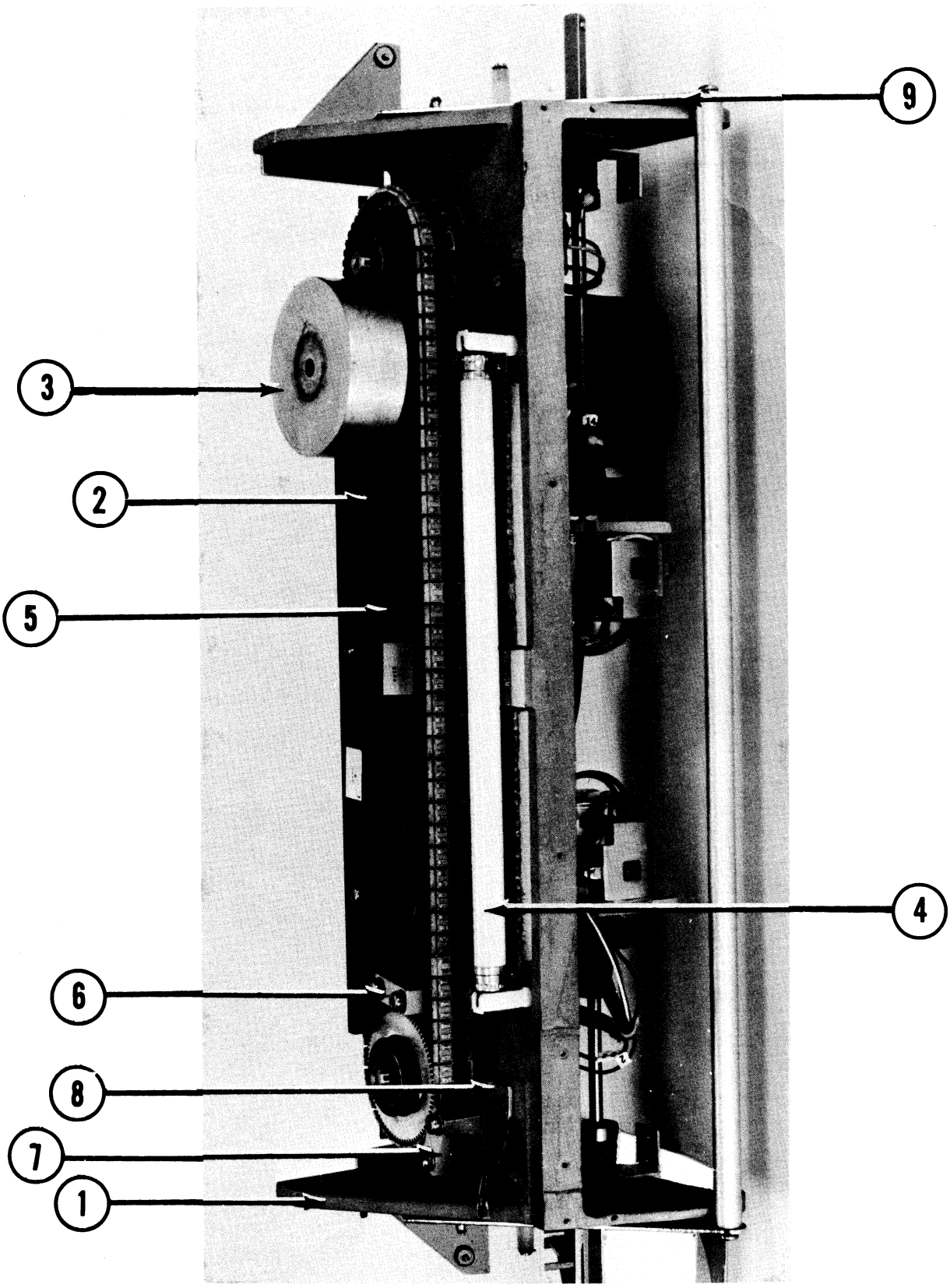


YOKE ASSEMBLY
FIG. 7-7.7

FIG. 7-7.7

| PART № | FIND № | DESCRIPTION |
|---|---|---|
| 31822021 | 1 | Yoke Assembly (60 Hz) |
| 31822022 | 1 | Yoke Assembly (50 Hz) |
| 67640241 | 2 | Standoff, Cover Support |
| 67640429 | 3 | Flywheel |
| 57182000 | 4 | Lamp |
| 67640433 | 5 | Guide, Bottom Belt |
| 86160203 | 6 | Magnetic Pickup Assembly - Gear |
| 86160203 | 7 | Magnetic Pickup Assembly - Belt |
| 67640232 | 8 | Pickup Plate |
| 67640498 | 9 | Latch Arm and Pin Assembly (R.H.) |
| 86160031 | 10 | Character Belt Static Eliminator (Not Shown) |

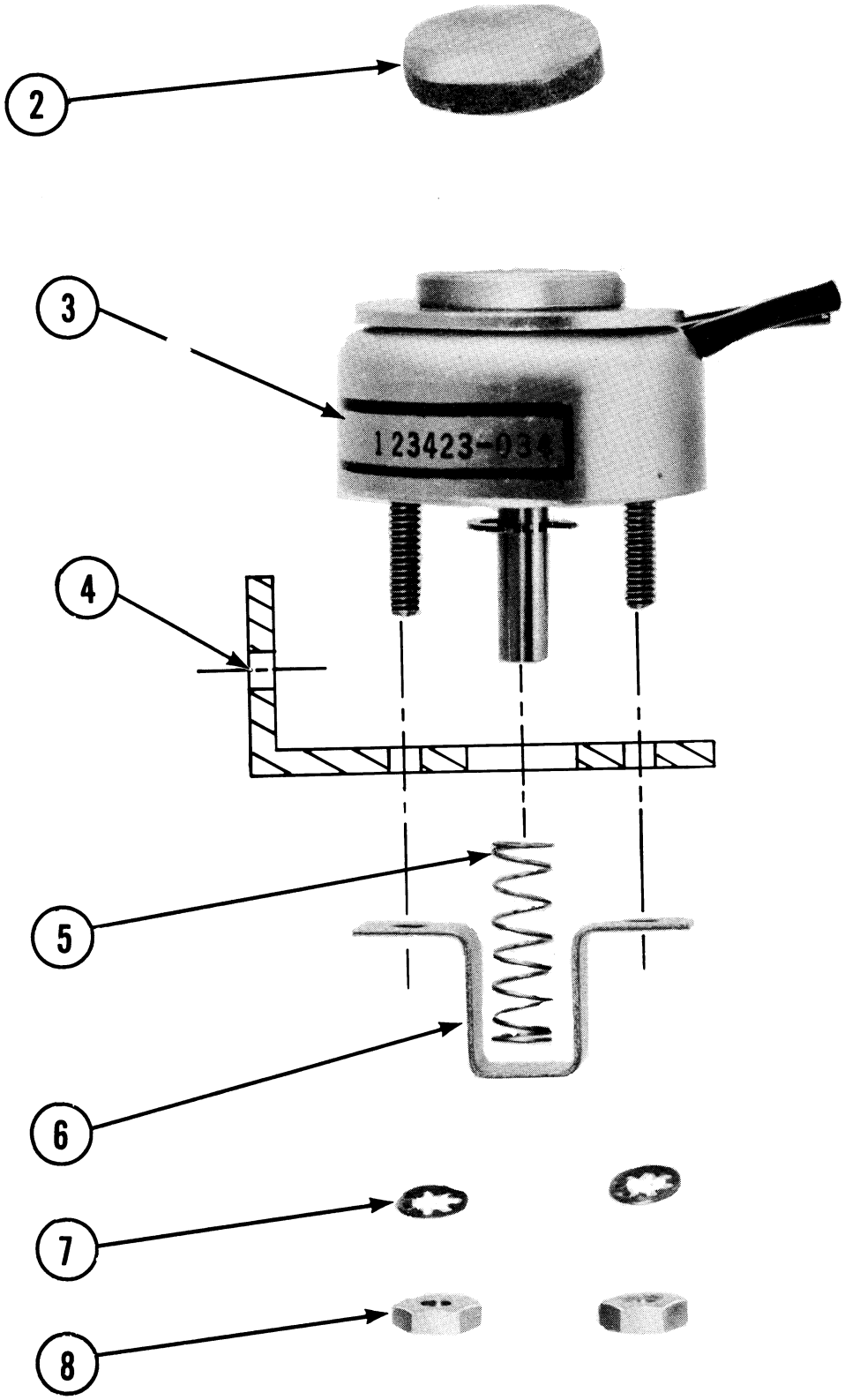


PAPER CLAMP ASSEMBLY
FIG. 7-8.1

FIG. 7-8.1

| PART № | FIND № | DESCRIPTION |
|---|---|---|
| 86160191 | 1 | Paper Clamp Assembly |
| 67640750 | 2 | Pad |
| 86160194 | 3 | Actuator Assembly |
| 67640747 | 4 | Mounting Bracket - Solenoid |
| 62511768 | 5 | Spring |
| 67640746 | 6 | Bracket - Spring Retainer |
| 61241108 | 7 | Lockwasher #5 |
| 61532007 | 8 | Hex nut 5-40 |

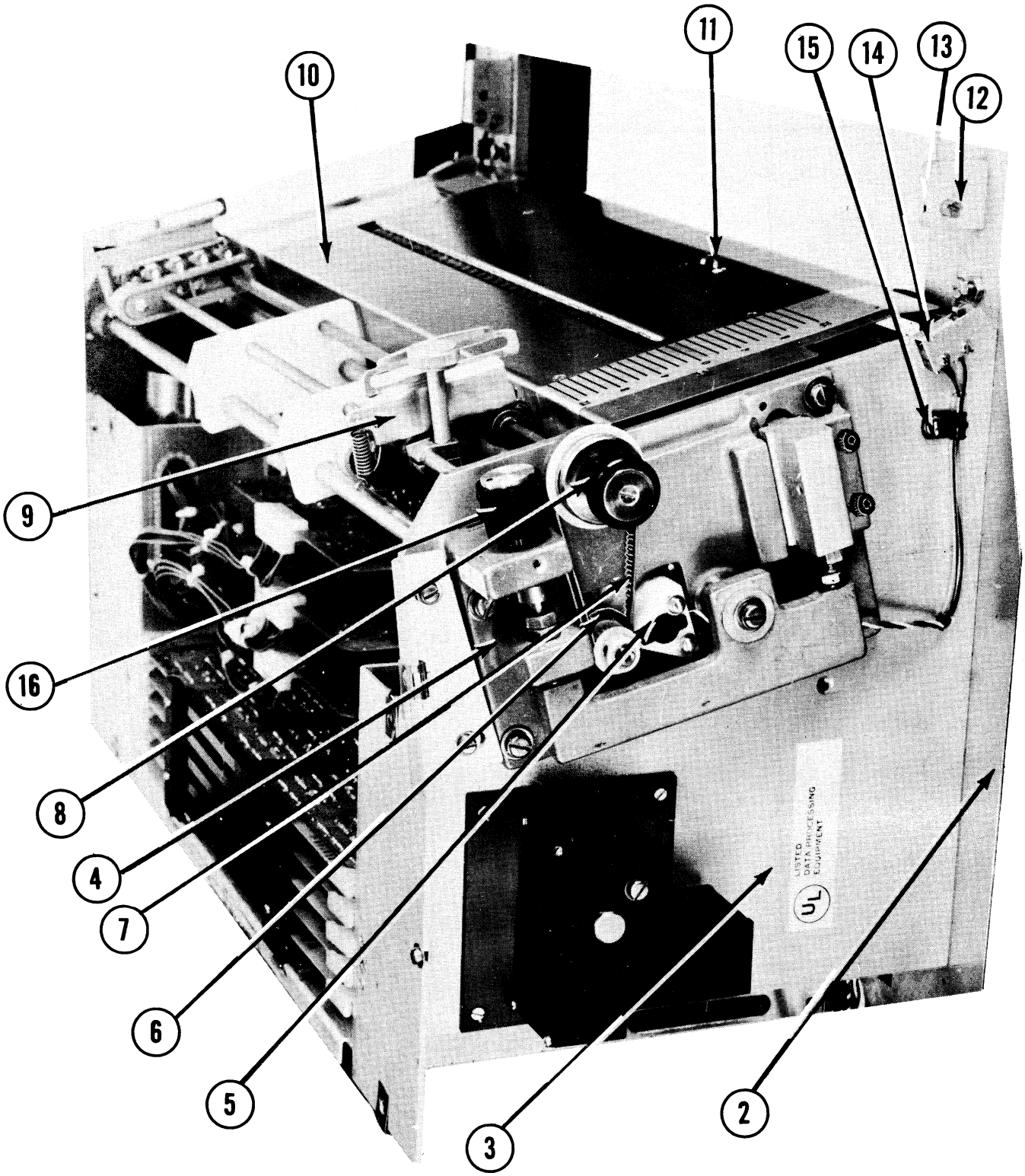


MAIN FRAME
FIG. 7-9.1

FIG. 7-9.1

| PART № | FIND № | DESCRIPTION |
|---|---|---|
| N/A | 1 | Main Frame Assembly |
| 67640647 | 2 | Machine Base Plate |
| 67640404 | 3 | End Plate - Left |
| 86160105 | 4 | Pivot Plate Assembly - Left |
| 86160236 | 5 | Line Marker Assembly |
| 86160236 | 6 | Disc Assembly - Line Marker |
| 62532150 | 7 | Timing Belt |
| 72428361 | 8 | Form Adjust Clutch |
| 62581018 | 9 | Paper Tractor - Left |
| 86160243 | 10 | Hammer Cover Assembly |
| 86160146 | 11 | Paper Detect Switch Assembly |
| 67640721 | 12 | Eccentric Pin |
| 61375003 | 13 | Set Screw - No Mar |
| 86160103 | 14 | Ribbon Reverse Switch Assembly |
| 61821403 | 15 | Clamp |
| 62581422 | 16 | Knob - Density Adjust |

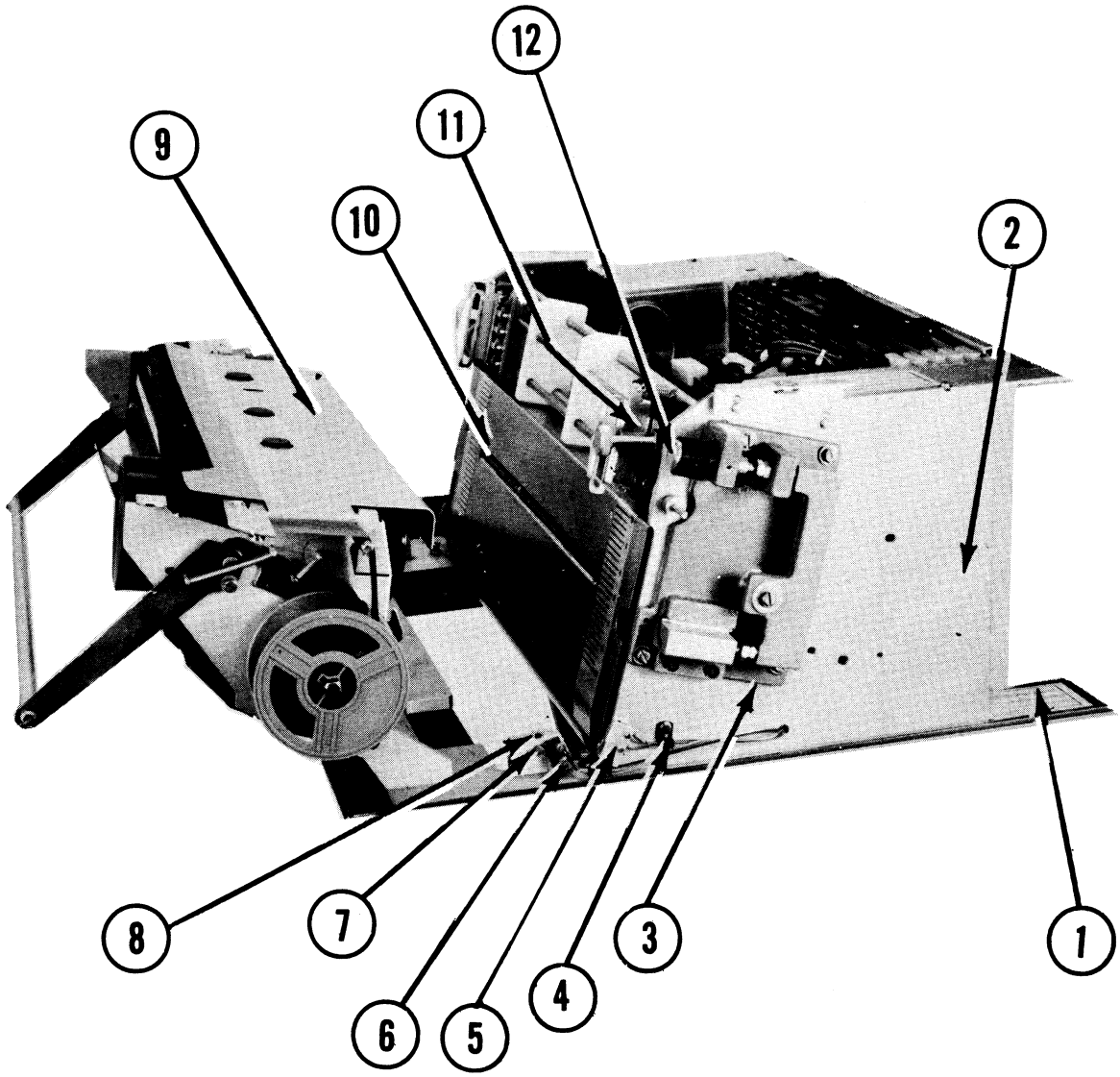


MAIN FRAME
FIG. 7-9.3

FIG. 7-9.3

| PART № | FIND № | DESCRIPTION |
|---|---|---|
| N/A | 1 | Main Frame |
| 67640402 | 2 | End Plate - Right |
| 86160106 | 3 | Pivot Plate Assembly - Right |
| 61821403 | 4 | Clamp |
| 86160103 | 5 | Ribbon Reverse Switch Assembly |
| 86160104 | 6 | Yoke Interlock Switch Assembly |
| 67640721 | 7 | Eccentric Pin |
| 61375003 | 8 | Set Screw - No Mar |
| 67640744 | 9 | Yoke Cover Plate |
| 67640745 | - | Front Ribbon Guide - Mylar (P/O Find No. 9) |
| 86160243 | 10 | Hammer Bar Cover Plate |
| 62581017 | 11 | Paper Tractor - Right |
| 62581422 | 12 | Knob - Density Adjust |

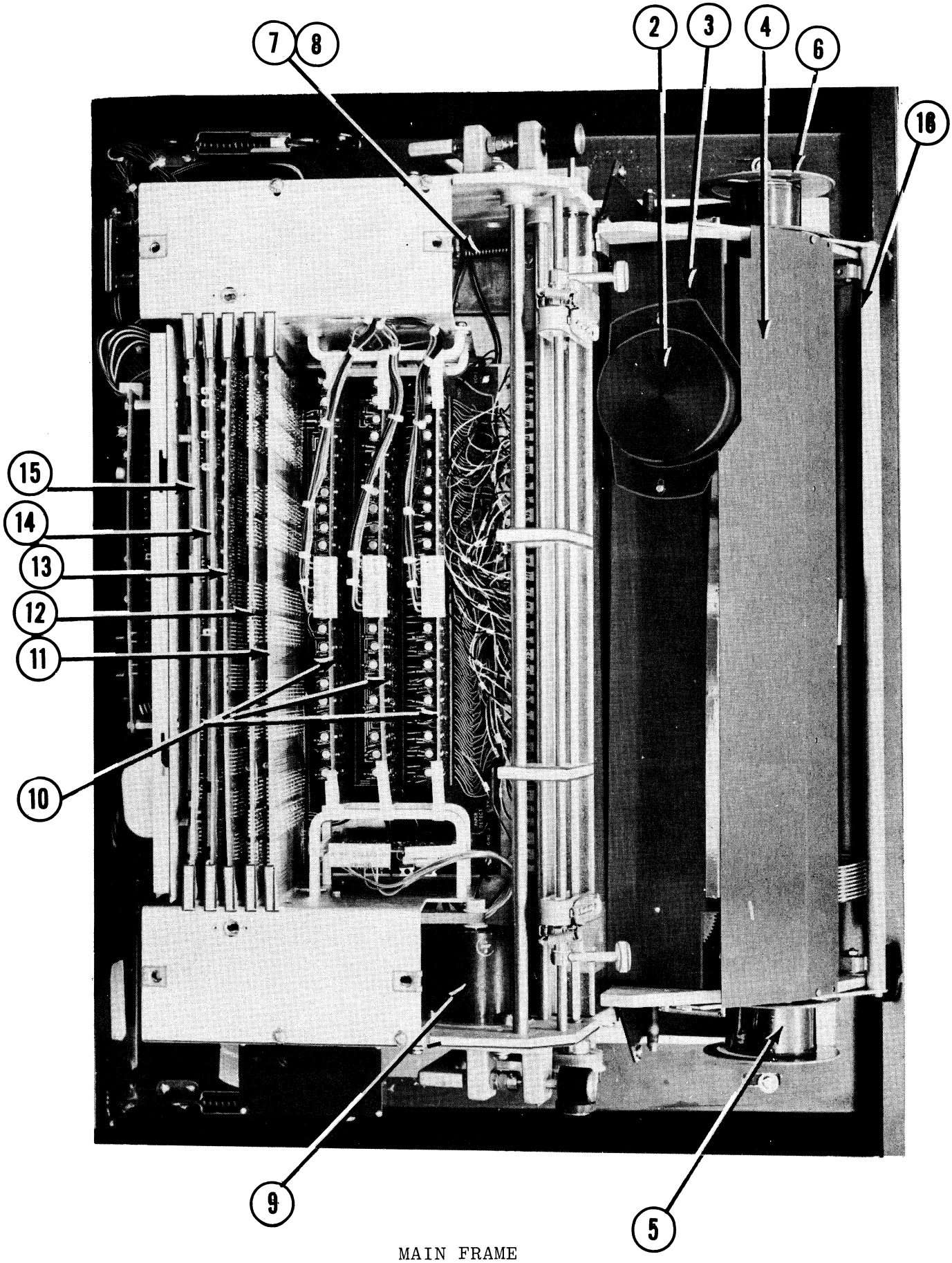


MAIN FRAME
FIG. 7-9.5

FIG. 7-9.5

| PART № | FIND № | DESCRIPTION |
|---|---|---|
| N/A | 1 | Main Frame |
| 67640016 | 2 | Flywheel Cover |
| 67640012 | 3 | Belt Cover |
| 67640014 | 4 | Lamp Cover |
| 31812105 | 5 | Ribbon R-2 Intense |
| 62511239 | 7 | Spring |
| 61131748 | 8 | Grooved Pin |
| 75661001 | 9 | Motor Assembly - Paper Drive |
| Ref. Sect. 6.7 | 10 | Hammer Driver |
| Ref. Sect. 6.6 | 11 | Hammer Buffer |
| Ref. Sect. 6.6 | 12 | Hammer Buffer |
| Ref. Sect. 6.5 | 13 | Register |
| Ref. Sect. 6.4 | 14 | Print and Paper Advance |
| Ref. Sect. 6.3 | 15 | Control Buffer |
| 67640244 | 16 | Bar Latch |

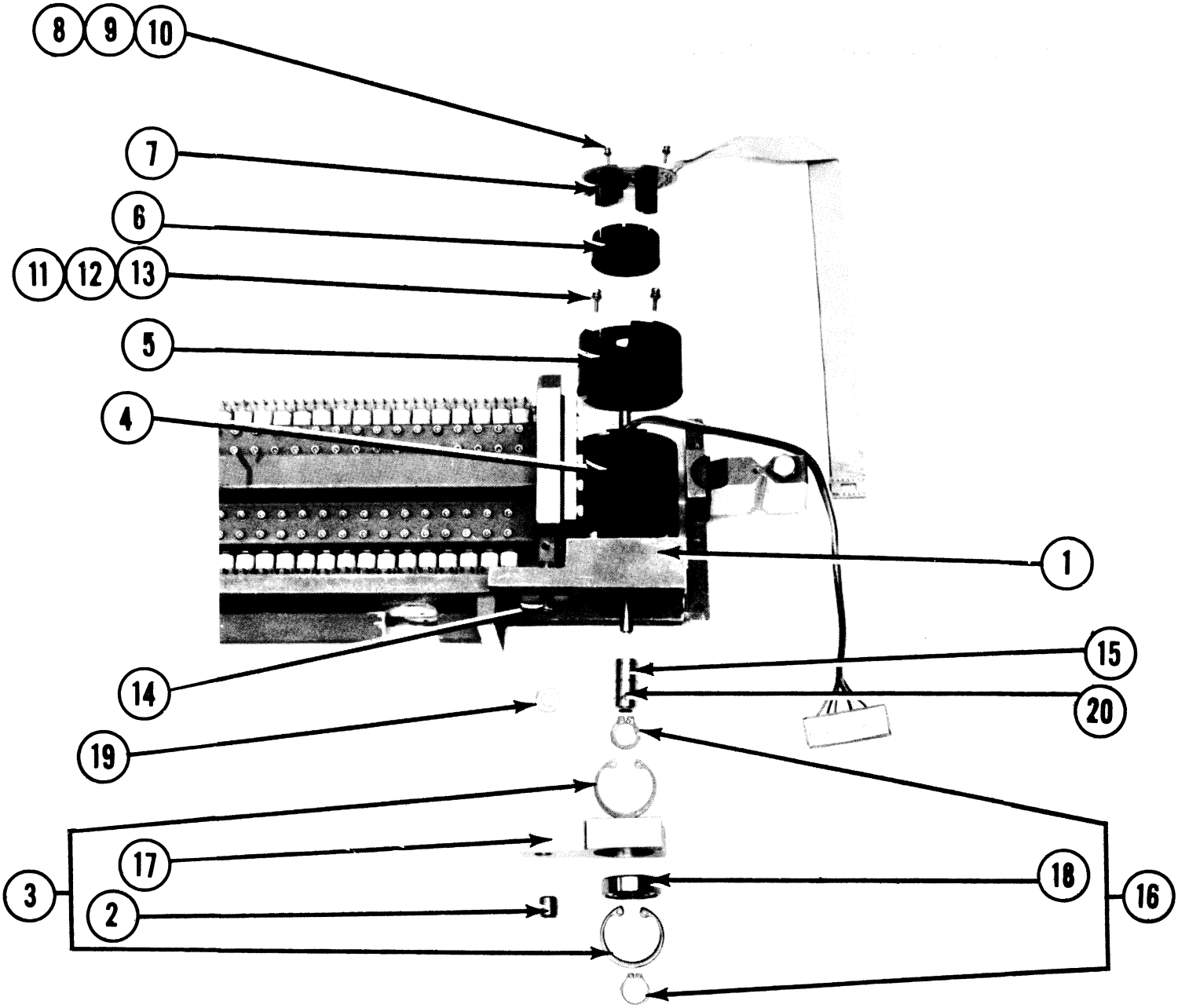


HAMMER BAR ASSEMBLY

FIG. 7-10.1

FIG. 7-10.1

| PART № | FIND № | DESCRIPTION |
|---|---|---|
| 31822043 | 1 | Oscillating Hammer Bar Assembly |
| 62362050 | 2 | Bearing (Bushing w/nylon insert) |
| 61817914 | 3 | Retainer Ring, Lg. |
| 86160083 | 4 | Motor Assembly |
| 67640399 | 5 | Housing, Feedback |
| 67640400 | 6 | Wheel, Feedback |
| 81040170 | 7 | Feedback P.C. W/Cable |
| 61432815 | 8 | Screw, Pan Head #2-56 x 3/8" Long |
| 61212004 | 9 | Washer, Flat #2 |
| 61231002 | 10 | Washer, Lock #2 Split |
| 61432827 | 11 | Screw, Pan Head #4-40, 7/16" Long |
| 61212008 | 12 | Washer, Flat #4 |
| 61231004 | 13 | Washer, Lock #4 Split |
| 67640027 | 14 | Eccentric Pin - Hammer Bar |
| 67640028 | 15 | Eccentric Pin - Stepping Motor |
| 61817856 | 16 | Retainer Ring, Sm. |
| 67640430 | 17 | Tie Bar |
| 62415360 | 18 | Bearing |
| 61221364 | 19 | Washer 1/2" O.D. x 9/32" I.D. x .031 Nylon |
| 61375030 | 20 | Screw, Cup Pt. Allen #8-32 x .188-inch |
| 61817205 | 21 * | Grip Nut (Retains Find No. 6 to Motor Shaft, Find No. 4) |
| 61278101 | 22 * | Nylon Retaining Standoff (Holds Find No. 23 to Find No. 7) |
| 67640401 | 23 * | Dust Cover (Prevents dust/chad/ink from contaminating Feedback P.C. unit) |

(*) Parts shown in Addendum S-1, only!

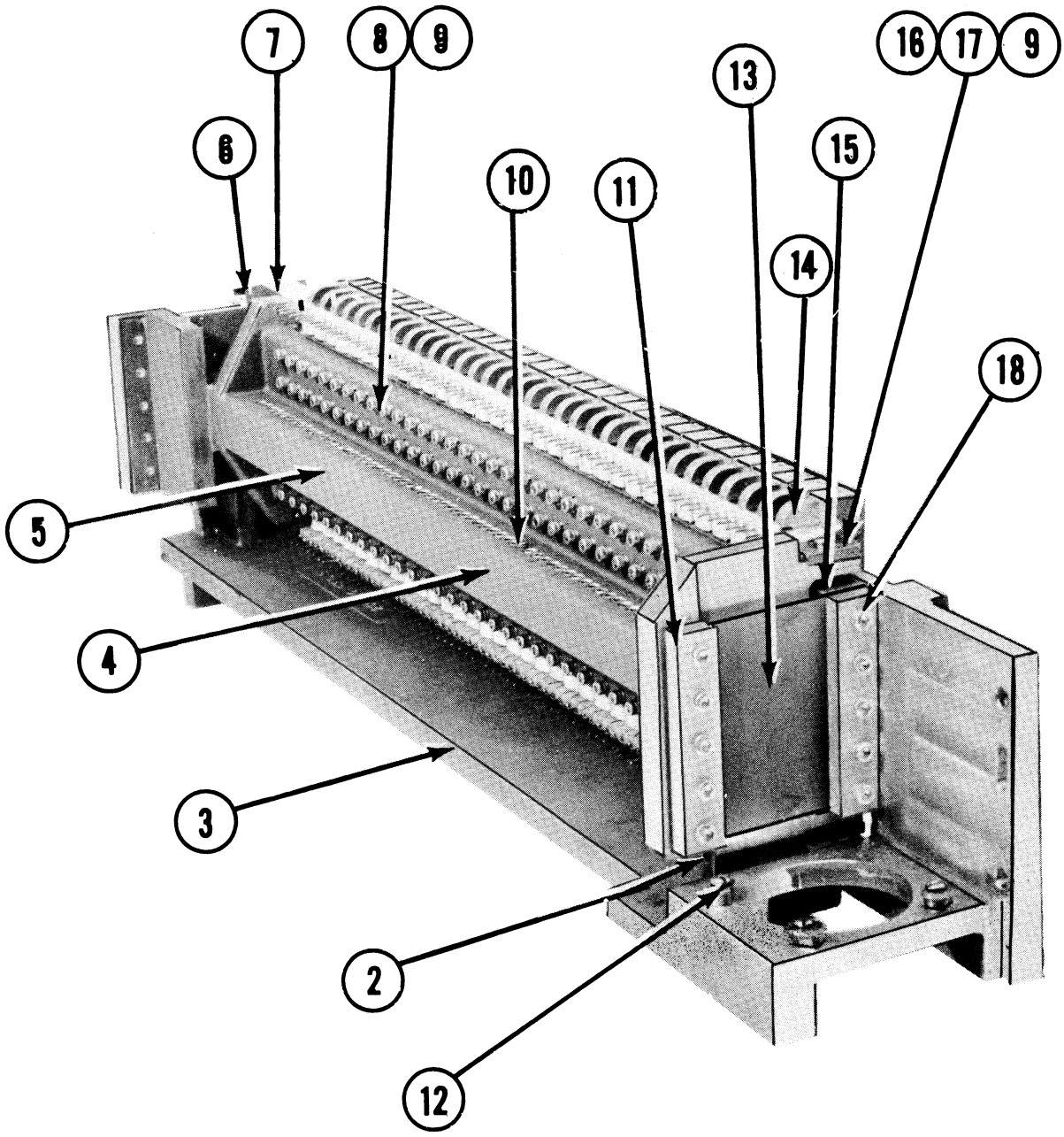


HAMMER BAR ASSEMBLY

FIG. 7-10.3

FIG. 7-10.3

| PART № | FIND № | DESCRIPTION |
|---|---|---|
| 31822043 | 1 | Oscillating Hammer Bar Assembly |
| 61372154 | 2 | Set Screw, 8-32 x 1/4 (Cone Pt.) |
| 613738838 | 2 | Set Screw, Locking (Backup); 8-32 x 1/4 in. |
| 67640451 | 3 | U Frame - Oscillating Hammer Bar |
| 67640451 | 4 | Hammer Mounting Bar |
| 67640555 | 5 | Adjusting Pin, Hammer (not shown) |
| 67640418 | 6 | Spring, Mylar |
| 86160079 | 7 | Mylar, Hammer Gap |
| 61511010 | 8 | Screw, Socket Head #4-40 x 5/8 |
| 61231004 | 9 | Washer, #4 Split Lock |
| 61372150 | 10 | Screw, Hammer Adjust (flight-time) |
| 67640454 | 11 | Clamp, Flexure |
| 61843355 | 12 | Synclamp |
| 67640509 | 13 | Flexure |
| 86160078 | 14 | Hammer Assembly |
| 67640455 | 15 | Mounting Plate, Flexure |
| 67640420 | 16 | Spring, (L.H.) Mylar |
| 61432824 | 17 | Screw, Pan Head 4-40 x 1/4 |
| 61511323 | 18 | Screw, Socket Head 6-32 x 5/8 (Cad. Pl.) |

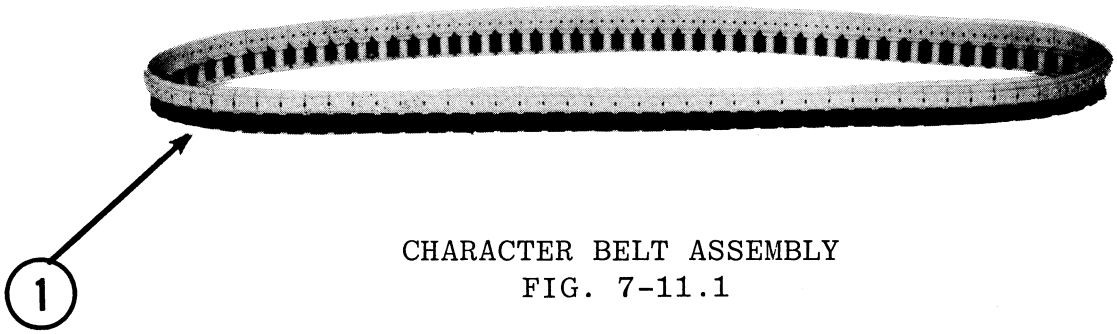


CHARACTER BELT ASSEMBLY
FIG. 7-11.1

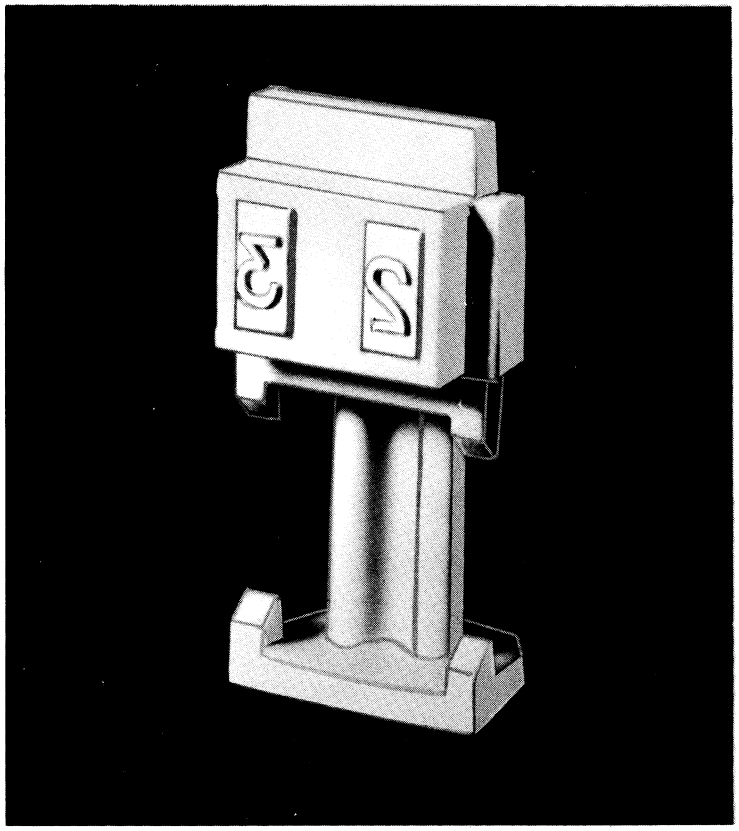

CHARACTER CLIP
FIG. 7-11.2

FIG. 7-11.2

| PART № | FIND № | DESCRIPTION |
|---|---|---|
| 82842150 | 1 | Character Belt Assembly ANSCII 64 Character Double Molded |
| 86122001 | 2 | Character Clip Assy (Space, !) |
| 86122018 | 3 | Character Clip Assy ( ", # ) |
| 86122019 | 4 | Character Clip Assy ($ , %) |
| 86122020 | 5 | Character Clip Assy (& , ') |
| 86122021 | 6 | Character Clip Assy ( ( , ) ) |
| 86122022 | 7 | Character Clip Assy (* , +) |
| 86122023 | 8 | Character Clip Assy (, , -) |
| 86122024 | 9 | Character Clip Assy (. , /) |
| 86122025 | 10 | Character Clip Assy (0 , 1) |
| 86122026 | 11 | Character Clip Assy (2 , 3) |
| 86122027 | 12 | Character Clip Assy (4 , 5) |
| 86122028 | 13 | Character Clip Assy (6 , 7) |
| 86122029 | 14 | Character Clip Assy (8 , 9) |
| 86122030 | 15 | Character Clip Assy (: , ;) |
| 86122031 | 16 | Character Clip Assy (<, =) |
| 86122032 | 17 | Character Clip Assy (>, ?) |
| 86122033 | 18 | Character Clip Assy (@ , A) |
| 86122003 | 19 | Character Clip Assy (B , C) |
| 86122004 | 20 | Character Clip Assy (D , E) |
| 86122005 | 21 | Character Clip Assy (F , G) |
| 86122006 | 22 | Character Clip Assy (H , I) |
| 86122007 | 23 | Character Clip Assy (J , K) |

FIG. 7-11.2

| PART № | FIND № | DESCRIPTION |
|---|---|---|
| 86122008 | 24 | Character Clip Assy (L , M) |
| 86122009 | 25 | Character Clip Assy (N , O) |
| 86122009 | 26 | Character Clip Assy (P , Q) |
| 86122011 | 27 | Character Clip Assy (R , S) |
| 86122012 | 28 | Character Clip Assy (T , U) |
| 86122013 | 29 | Character Clip Assy (V , W) |
| 86122014 | 30 | Character Clip Assy (X , Y) |
| 86122015 | 31 | Character Clip Assy (Z ,[ ) |
| 86122016 | 32 | Character Clip Assy ( \ , ]) |
| 86122017 | 33 | Character Clip Assy ( ↑ ,←) |
| 62532050 | 34 | Belt |
| 61118100 | REF | Ferromagnetic Clip |

NOTE: The above character clip sequence is repeated (3) times in consecutive order for a complete 64 character belt assembly.

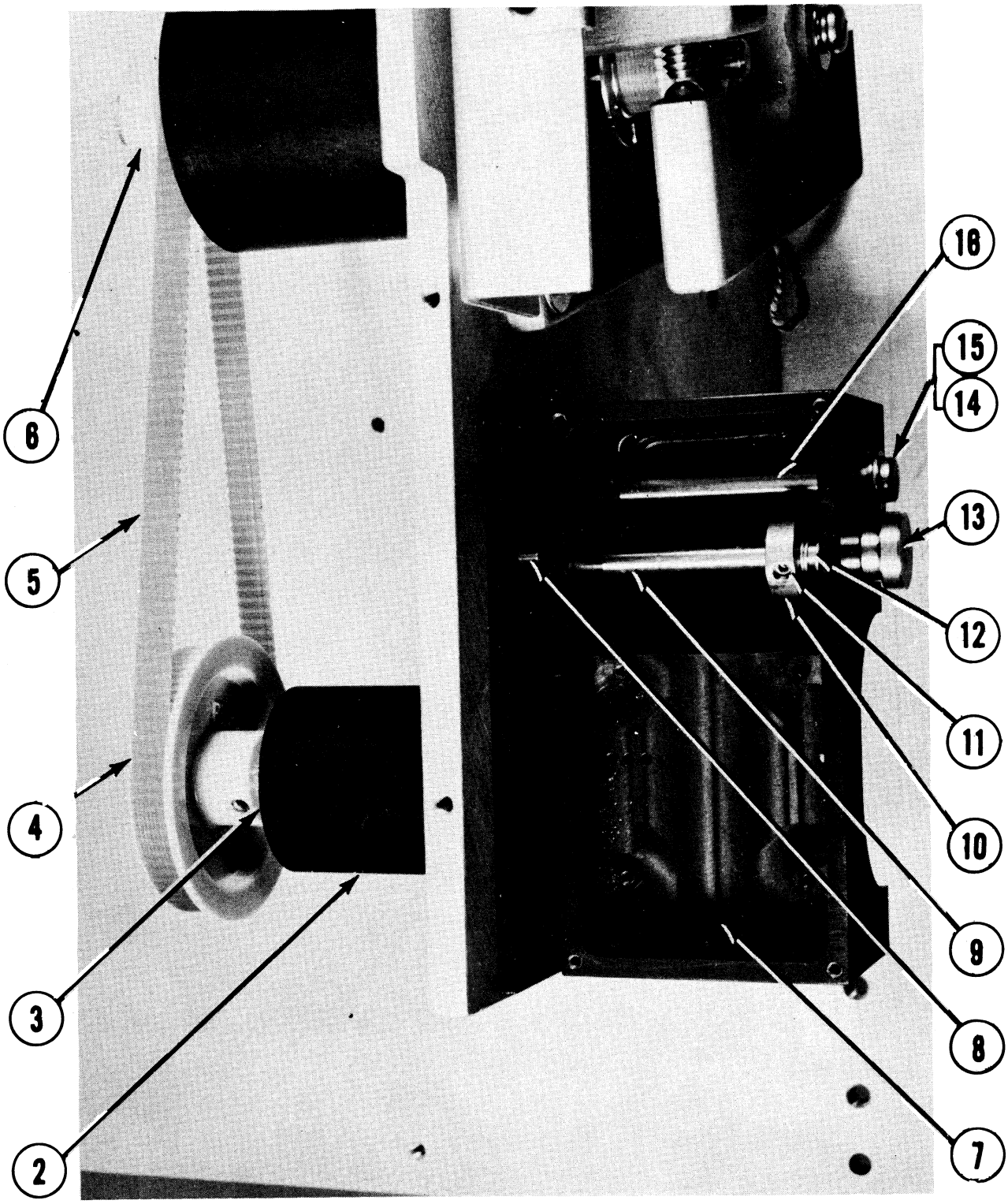


VERTICAL FORMAT UNIT

FIG. 7-12.1

FIG. 7-12.1

| PART № | FIND № | DESCRIPTION |
|---|---|---|
| 86160188 | 1 | Vertical Format Unit (2 Channel) |
| 67640610 | 2 | Bearing Housing |
| 61817962 | 3 | Retaining Ring |
| 86160123 | 4 | Pulley Assembly |
| 62532155 | 5 | Belt |
| 86160124 | 6 | Pulley Assembly |
| 81040400 | 7 | Phototrans P.C. Assembly - 2 Channel (Not shown) |
| 61124355 | 8 | Spring Pin |
| 67640388 | 9 | Detent Shaft |
| 67640389 | 10 | Collar - Shaft Detent |
| 61373836 | 11 | Set Screw Cup 8-32 x 1/8 |
| 62511764 | 12 | Spring |
| 67640390 | 13 | Knob |
| 61432854 | 14 | Screw Pan Head 8-32 x 1/4 |
| 61212014 | 15 | Washer, Flat #8 |
| 67640738 | 16 | Shaft, Pivot |

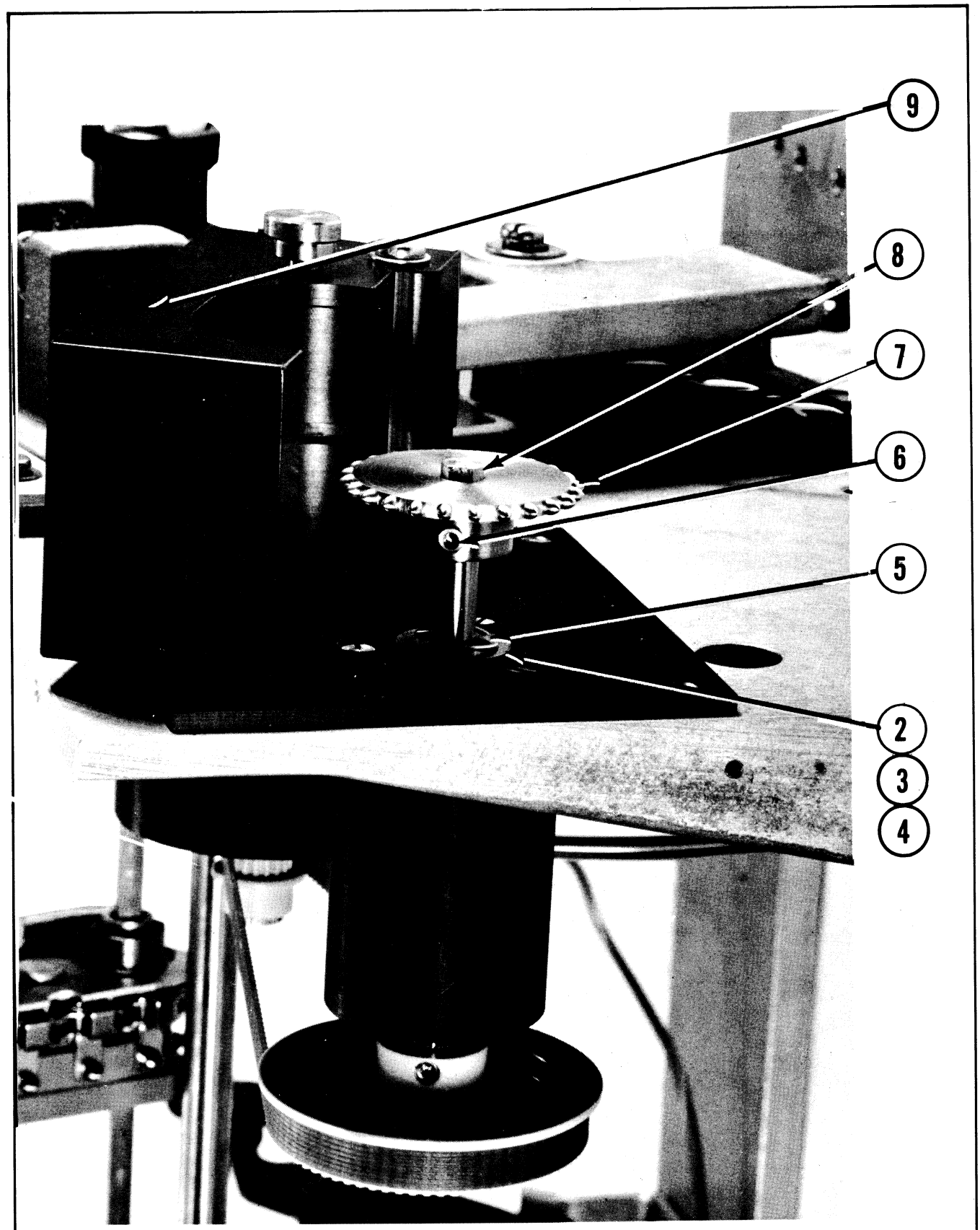


VERTICAL FORMAT UNIT
FIG. 7-12.3

FIG. 7-12.3

| PART № | FIND № | DESCRIPTION |
|---|---|---|
| 86160188 | 1 | Vertical Format Unit (2 Channel) |
| 62415260 | 2 | Bearing |
| 61212114 | 3 | Washer, Flat 11/16 O.D. |
| 61212120 | 4 | Washer, Flat .468 o.d. X .255ID X .032THK |
| 61817934 | 5 | Retaining Ring |
| 61373836 | 6 | Set Screw |
| 62581405 | 7 | Sprocket |
| 67640737 | 8 | Shaft - Sprocket |
| 67640740 | 9 | Cover |

# ADDENDUM S-1

4.3.5.9 HAMMER BAR DRIVE MECHANISM

| FIG. REF. NO. | DESCRIPTION |
|---|---|
| 1 | MOTOR, 3Ø (Hammer Bar Drive) |
| 2 | HOUSING |
| 3 | SLOTTED WHEEL |
| 4 | FEEDBACK PCA |
| 5 | 4-40 PAN-HEAD SCREW (One of four) |
| 6 | NO. 4 SPLIT LOCKWASHER (One of two) |
| 7 | NO. 4 FLAT WASHER (One of two) |
| 8 | GRIP-NUT |
| 9 | NO. 4 FLAT WASHER, NYLON (One of two) |
| 10 | DUST CAP |
| 11 | SPACER (Required on Eastern Air Devices Inc., motors only) |
| P2 | Hammer Bar Drive Motor Connector |
| P3 | Feedback PCA Connector |
| | (SEE FIGURE 4-32) |

TABLE 4-1. HAMMER BAR DRIVE MOTOR ASSEMBLY--- COMPONENT IDENTIFICATION

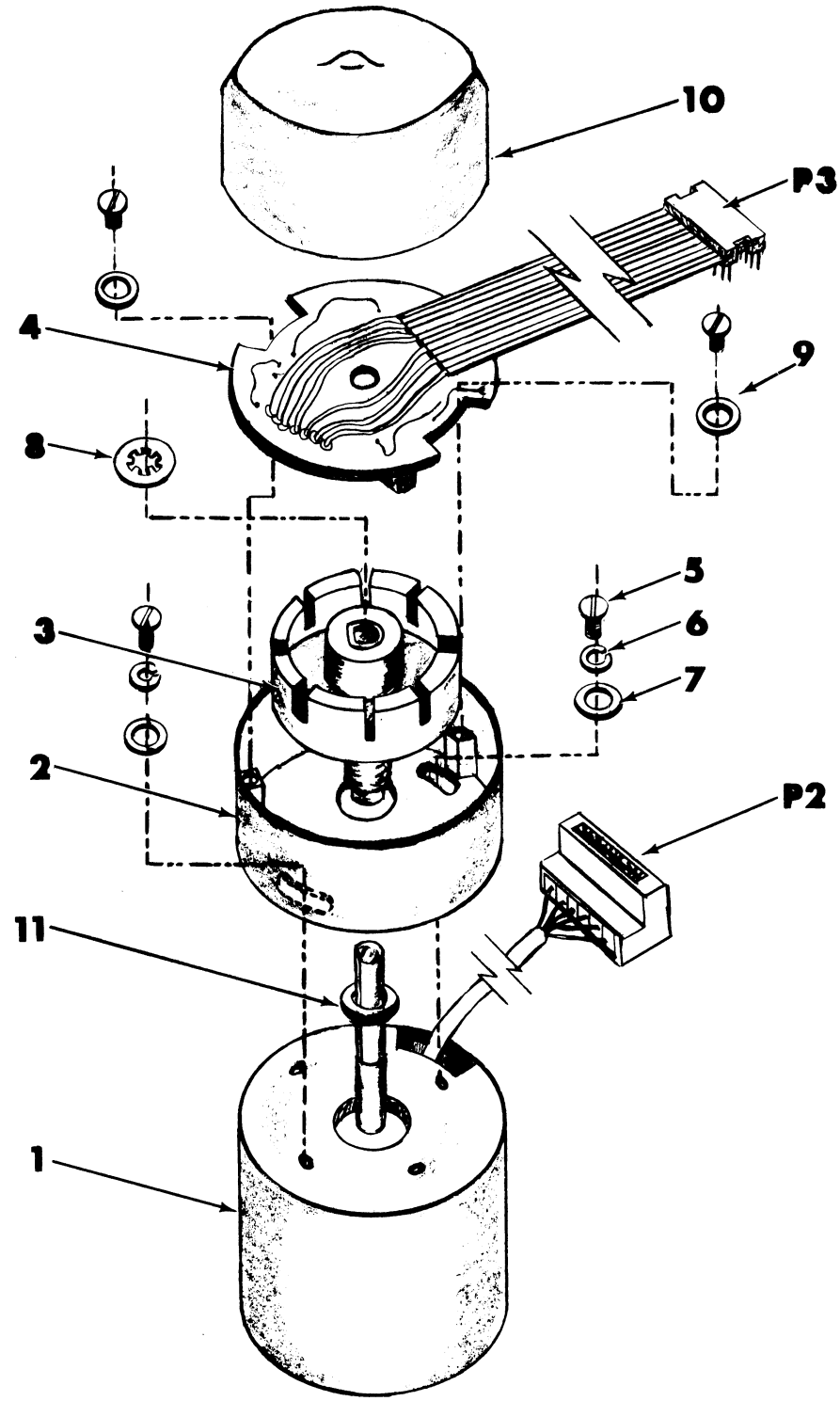


FIGURE 4-32. HAMMER BAR DRIVE MOTOR-ASSEMBLY/DISASSEMBLY

### 4.3.5.9 HAMMER BAR DRIVE MECHANISM

The hammer bar drive mechanism moves the hammer bar to the appropriate position so that the character to be printed will be impacted by the center of the hammer face. This is accomplished by moving the hammer bar .050" to the left of its neutral position so that all odd column characters will be impacted by the center of the hammers. Then, prior to printing the even columns, the hammer bar is moved .100" to the right of the odd columns Home position. Subsequent print cycles will involve shuttling the bar between odd and even Home positions. Proper performance of the mechanism controlling this motion depends on correct adjustment of the critical parts comprising the motor housing assembly.

#### 4.3.5.9.1 REPLACEMENT OF FEEDBACK BOARD ASSEMBLY (Figure 4-32)

A. REMOVAL OF FEEDBACK BOARD

1. Remove the UL cover (Paragraph 4.3.5.2.a).

2. Disconnect the paper advance motor and the hammer bar drive motor from J1 and J2 of the Paper Advance and Hammer Bar Drive PCA. Remove the PCA and disconnect the Feedback PCA ribbon cable.

3. Remove the hammer bar as described in section 4.3.5.1.

4. Remove the dust cap by sliding it up and off the Feedback Housing.

5. Remove the two No. 4 pan-head screws with associated flat washers from the Feedback PCA, and lift the PCA from the motor housing.

B. REPLACEMENT OF FEEDBACK PCA

1. Position the Feedback PCA in the housing ensuring that the ribbon cable is folded over the PCA as shown in Figure 4-32.

2. Seat the Feedback PCA in the top of the motor housing and loosely fasten the PCA with the two No. 4 pan-head mounting screws and the associated washers.

3. Return the hammer bar to its original position and fasten the four No. 10 pan-head holding screws.

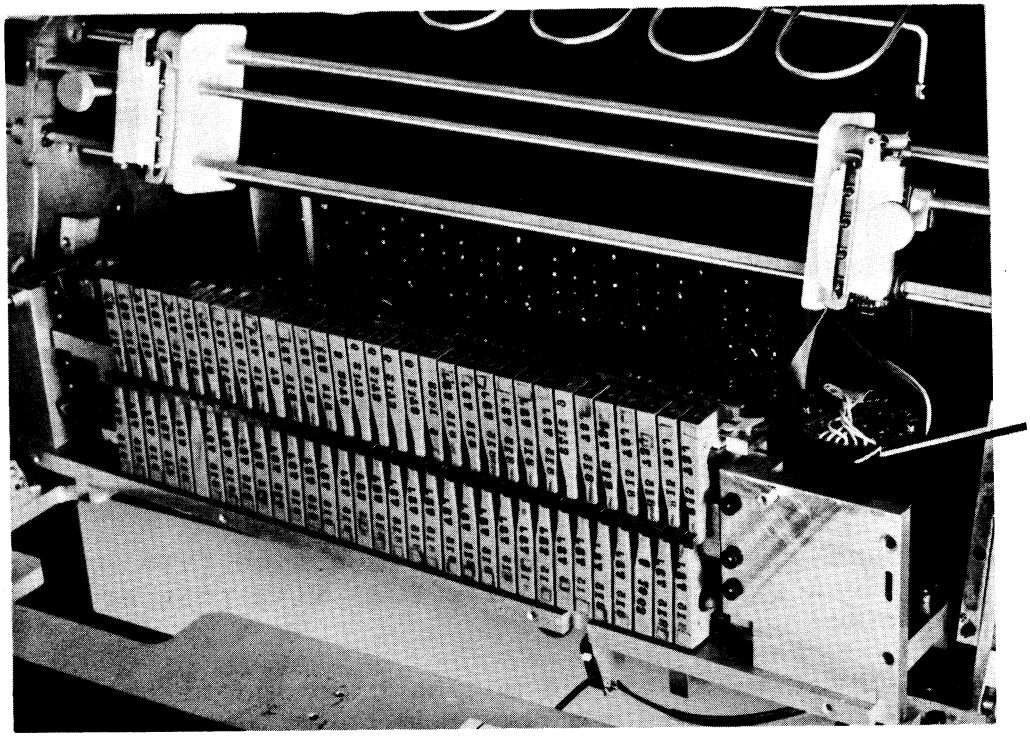


HAMMER BAR REMOVED
FIGURE 4-35

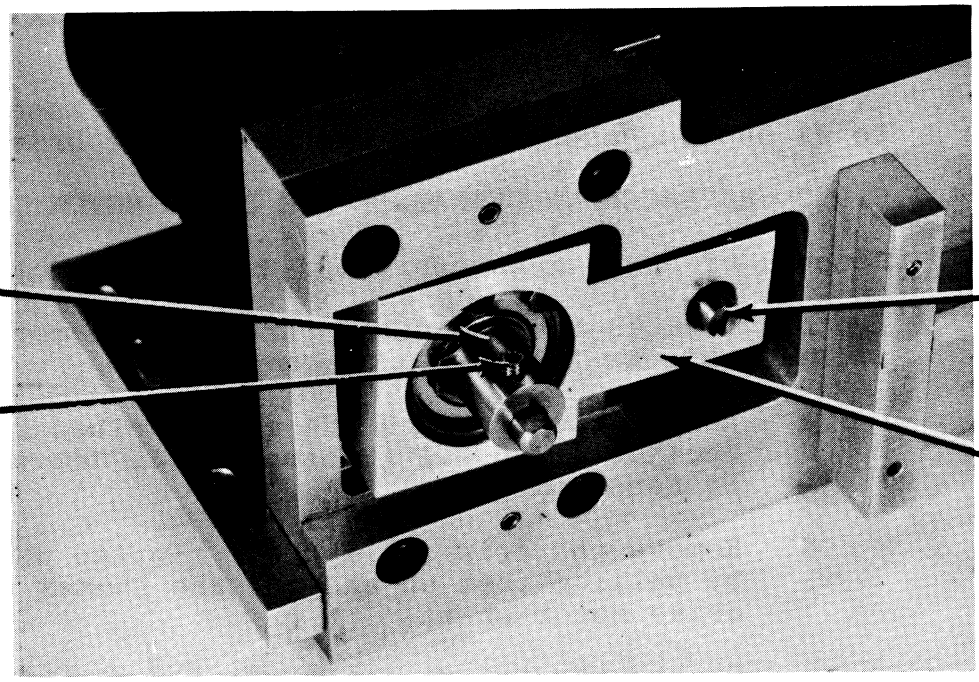


ECCENTRIC AND TIE BAR ASSEMBLY
FIGURE 4-36

4. Connect the cables from the Feedback PCA, and the hammer bar drive motor, to the Paper Advance and Hammer Bar Drive PCA. Install the PCA in the motherboard connector J-12 as in Figure 1-7.

C. ALIGNMENT OF FEEDBACK BOARD

The final positioning of the Feedback PCA will be determined by rotating the PCA to obtain the correct motion time. The motion time must be adjusted to 30 milliseconds ± 1 msec. A clockwise rotation of 2 degrees will yield about a 5 millisecond increase in motion time. Likewise, a counterclockwise rotation will yield a decrease in motion time. Motion time measurement is made at TP6 of the Paper Advance and Hammer Bar Drive PCA, during a print cycle.

1. Turn power on and check motion time (TP6 on Paper Advance/Hammer Bar Drive PCA) with printer in TEST mode.

2. Adjust to specified motion time and tighten the two No. 4 pan-head screws.

3. Recheck and readjust if necessary.

4. Return the dust cap to its original position.

5. Return the hammer bar cover plate to its original position.

6. Return connector from paper advance motor assembly to J1 on the Paper Advance and Hammer Bar Drive PCA.

4.3.5.9.2 REPLACEMENT OF HAMMER BAR DRIVE MOTOR

A. Removal of Housing Assembly and Hammer Bar Motor

1. Disassemble the component parts of the motor assembly as follows:

a. Remove the Feedback PCA as described in Section 4.3.5.9.1 (Subsection A: Removal of Feedback Board)

b. Remove the grip-nut and the slotted wheel by pulling them up and off the hammer bar drive motor shaft.

c. Remove the two No. 4 pan-head screws (5) with associated flat washers and lock washers (6) and (7), at the base of the housing and remove the housing from the motor.

FLAT OF SHAFT POSITIONED DIRECTLY TO LEFT SIDE OF PRINTER

MOTOR WIRES TO REAR OF PRINTER

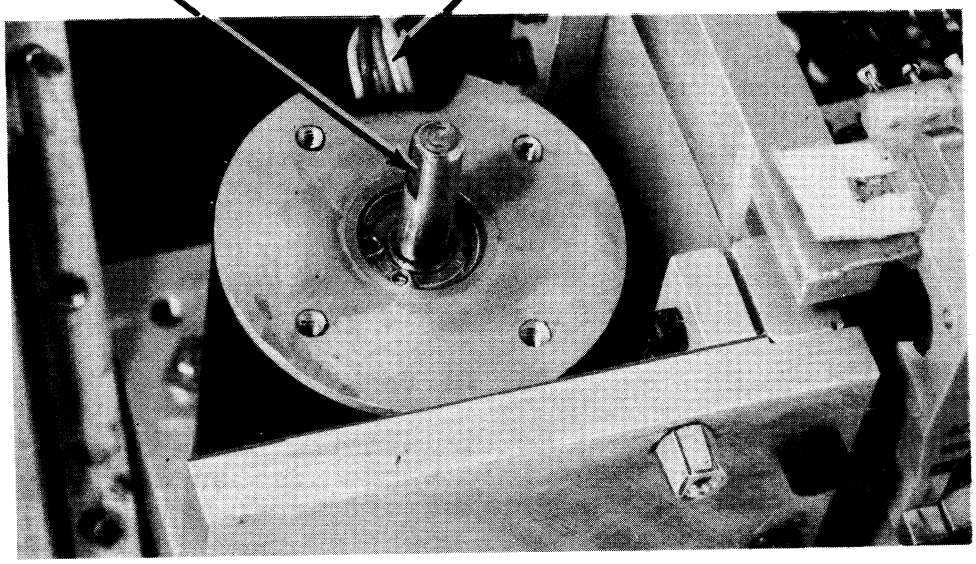

INSTALLATION OF HAMMER BAR DRIVE MOTOR

FIGURE 4-37

MOTOR MOUNTING CLAMPS

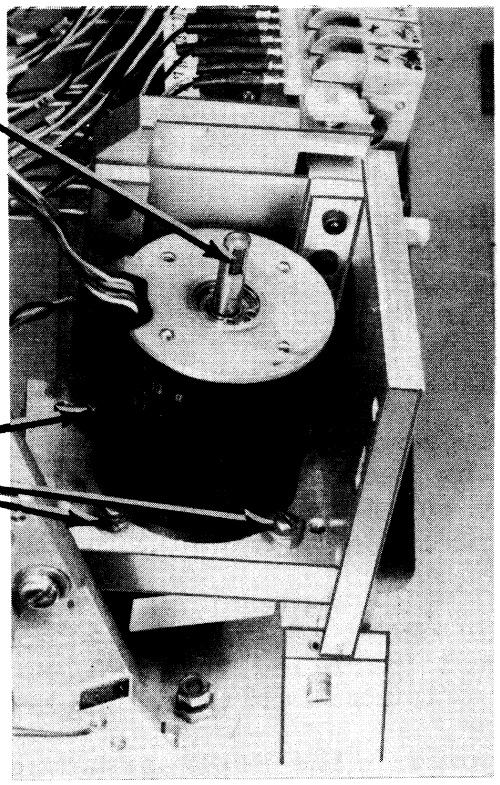

FIGURE 4-38

d. Remove the spacer (11) from the hammer bar drive motor shaft, if it is present, by sliding it up and off the motor shaft. (If a spacer is <u>not</u> present disregard this instruction).

2. Position the hammer bar as shown in Figure 4-35 for removal of motor.

   a. Loosen the Allen set screw which fastens the tie bar assembly at the lower end of the motor shaft (Reference Figure 4-36).

   b. Loosen the three motor mounting clamps at the base of the motor, (Reference Figure 4-38)

B. Installation of Hammer Bar Drive Motor

1. Insert the replacement motor into the hammer bar assembly with the motor lead wires dressed directly toward the rear of the printer (Figure 4-37)---do not tighten the three motor mounting clamp hold-down screws at this time.

NOTE

There are eight (8) angular shaft positions where the motor will stop on the Phase A (ØA) field winding (every 45 degrees of shaft rotation)---the following steps serve to align the motor precisely, s that the hammer bar will stop only on ØA ("Home" position).

2. Connect the cables from the Feedback PCA and the hammer bar drive motor to the Paper Advance and Hammer Bar Drive PCA. Install the PCA in the motherboard connector J-12 as in Figure 1-7.

CAUTION

Do not apply power at this time! Also, make sure that the Feedback PCA's artwork side does not contact any metal parts in the printer; failure to do this may result in damage to the P.C.A.!

3. Rotate the motor shaft so that the shaft-flat is positioned toward (parallel to) the left-hand side of the U-frame (Figures 4-37 and 4-38).

4. Enable system power---the motor armature (shaft)

will automatically increment to the nearest ØA position. Rotate the complete motor assembly such that the shaft-flat is returned to the position shown in Figure 4-36. Securely tighten the motor mounting clamp hold-down screws, and deenergize system power.

5. If the replacement hammer bar drive motor unit is one which has been produced by Eastern Air Devices, Inc., it will be necessary to install a Spacer (11) on the motor shaft: install Spacer (11) by sliding it down on the motor shaft (see Figure 4-32) until the device is fully seated within the shaft bearing recess contained in the motor case.

NOTE

Hammer bar drive motor units produced by manufacturers other than Eastern Air Devices, Inc., do not require spacer (item 11); when installing a motor produced by these manufacturers, disregard Step 5., above (discard the Spacer)!

6. Install the plastic Feedback PCA housing on top of the hammer bar drive motor (Figure 4-32), being certain to carefully "center" the housing on the motor shaft---the Feedback PCA mounting holes ("posts") should be oriented 15 degrees offset (clockwise) from the longitudinal axis of the hammer bar assembly, (mounting post holes located between 9 and 10 o'clock and 3 and 4 o'clock, respectively). Tighten the housing in position---DO NOT OVERTIGHTEN screws (5), as the plastic housing may crack under stress.

7. Carefully install the slotted wheel on the motor shaft; position the slotted wheel such that the motor shaft flat matches up with the wheel flat---(do not force the parts together), see Figure 4-32; slide the slotted wheel down as far as possible. Install the grip-nut by pushing it down on the motor shaft until it is flush with the top of the slotted wheel.

8. Position the Feedback PCA in the housing ensuring that the grey ribbon cable is folded over the PCA (see Figure 4-32)---place a finger atop the center of the PCA, and press down slightly, while rotating the motor shaft with the other hand; a lack of friction should be observed. If friction (drag) is detected, one of two problems exist:

   a. the plastic Feedback housing is off-center (with respect to the motor shaft).

b. slotted wheel mounted too high on motor shaft (not installed as in step No. 7 and/or spacer is not needed).

In either event, correct the situation (remove the cause of the friction), prior to proceeding with this installation sequence; if allowed to exist, the slotted wheel may rub against one of the interrupter modules on the Feedback PCA, damaging the unit. Once the source of friction is removed (or if none existed), insert the Feedback PCA mounting screws with associated washers, but do not tighten at this time.

9. Install the tie bar assembly between the motor shaft and the vernier eccentric pin on the hammer bar assembly (Figure 4-34)---position the tie bar assembly on the motor shaft to provide 1/8-inch clearance to the U-frame; securely tighten the tie bar set-screw to the motor shaft-flat.

10. Install the complete hammer bar assembly into the printer with its weight supported by the two mounting bracket roll pins---a coarse adjustment of the Feedback PCA may now be accomplished, as detailed below.

11. Enable printer system power---the hammer bar should initialize into the left-hand position (hammers deflected .050-inch to the left).

NOTE

If the hammer bar does not immediately initialize (deflect) to the left, rotate the Feedback PCA, in small increments, while energizing/deenergizing system power, until application of system power does result in the desired left-hand deflection of the hammer bar.

12. Defeat (wedge closed, or jumper connections) the yoke safety switch, to energize the character belt drive motor. Disable the hammer driver circuits, by removing the three plug/cable combinations from the top surfaces of the three hammer driver PCA's (one plug/cable, per PCA).

13. Energize the printer, in the TEST mode---the hammer bar assembly should oscillate, back-and-forth, by .100-inch. Should the unit fail to oscillate, rotate the Feedback PCA to that position which causes oscillation.

14. Utilizing an oscilloscope, set for a sweep rate of 5 ms/division, (internal triggering and positive slope), monitor the MOTION TIME waveform present at TP6 of the Paper Advance and Hammer Bar Drive PCA---the actual pulse-width displayed is unimportant; however, the trailing-edge of the waveform will appear to be unstable---to correct this instability rotate the vernier eccentric pin (part of hammer bar assembly ---Figure 4-34), until the trailing-edge of the waveform stabilizes. The odd/even mechanical throw of the hammer bar is now in balance.

15. With the oscilloscope still connected to TP6 of the Paper Advance/Hammer Bar Drive PCA, adjust MOTION TIME to 30 msec, ±1 msec, by rotating the Feedback PCA unit for this value. (Check to ensure that the trailing-edge of the waveform remains stable---if instability is evidenced, rotate the vernier eccentric pin as directed in Step 14., above).

16. As a final alignment check, shift the oscilloscope probe first, to TP5, then TP4 on the Paper Advance/Hammer Bar Drive PCA---Observe the negative going ODD and EVEN MOTION signals displayed at these test points. Both waveforms should equal 30 msec, ±1 msec in width, and should be equal to each other in width, ±1 msec.

17. Assuming that all signals monitored are within tolerances, disconnect the oscilloscope from the Paper Advance/Hammer Bar Drive PCA, and very securely tighten the cone-tipped set-screw holding the vernier eccentric pin in position---tighten the small cup screw. Carefully tighten the two screws securing the Feedback PCA to the Feedback housing, and install the dust cap.

18. Secure the hammer bar assembly within the printer by means of the four attaching screws, and install hammer bar cover.

# ATTENTION!

Page S-5, Step C: ALIGNMENT OF FEEDBACK BOARD

MOTION TIME must be initially adjusted for a displayed value (at TP6) of 30, ± 1 msec, using the internal TEST mode of operation as explained in step C, 1 through 6. However, once properly adjusted, MOTION TIME may vary during the course of normal printer operation, by as much as ± 4 msec from the nominal center value.

THIS NORMALLY ACCEPTABLE VARIATION IN MOTION TIME may be produced during the printing of different data messages (not internal Self-Test), or by slight mechanical differences occurring as the printer settles into a fully warmed-up running situation.

During routine operations (or when exercising the printer with other than the internal Self-Test pattern), MOTION TIME (at TP6) may be observed to be 30 ± 4 msec, with no degradation in print quality!