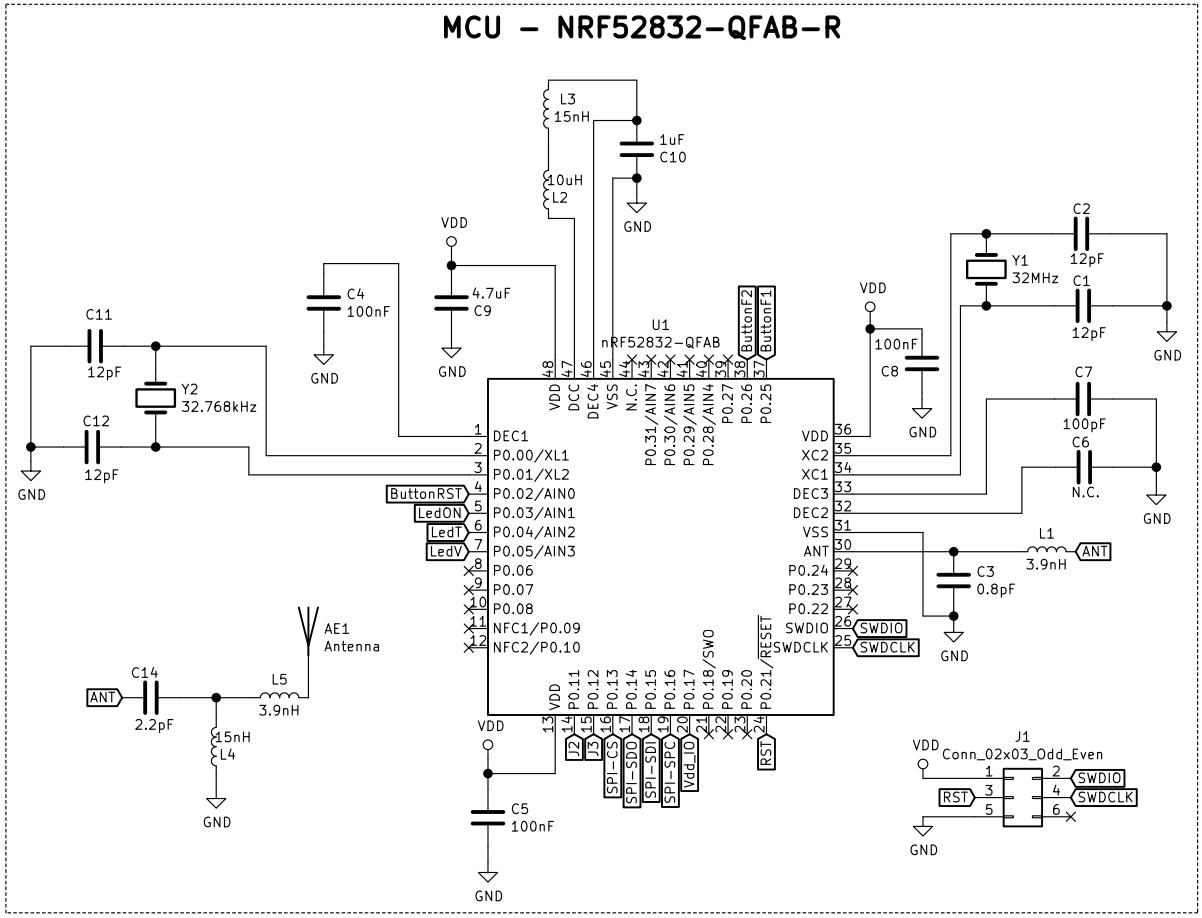

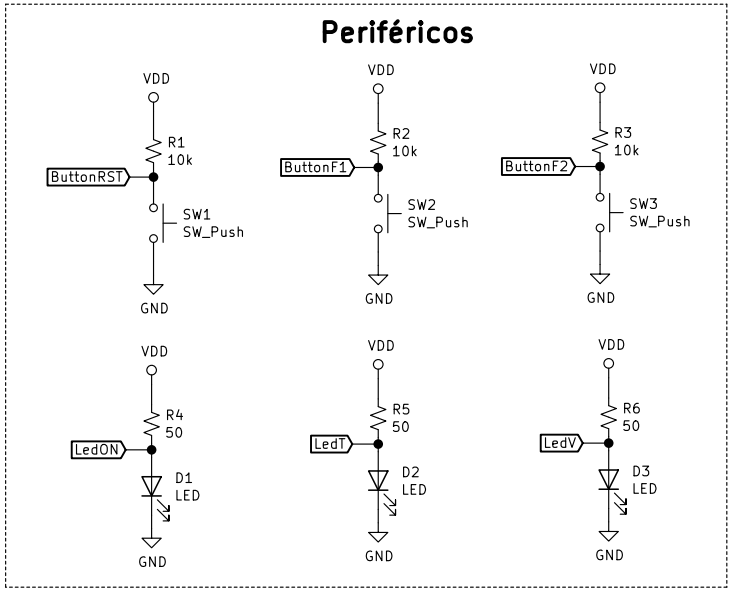

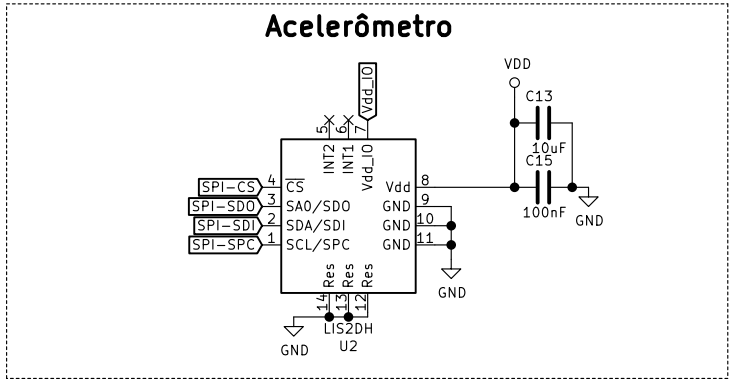

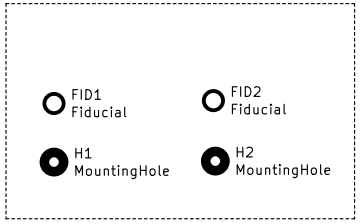

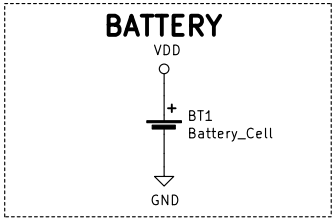

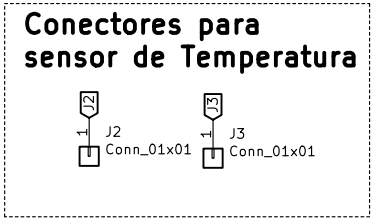

ECOM087.2019.2

Sheet: /
File: bkr01at.sch

Title: **Sensor de vibrações e temperatura BKR:01AT**

Size: A4	Date: 26-02-2020	**Rev:**
KiCad E.D.A. kicad 5.1.4-e60b26684ubuntu16.04.1		Id: 1/1