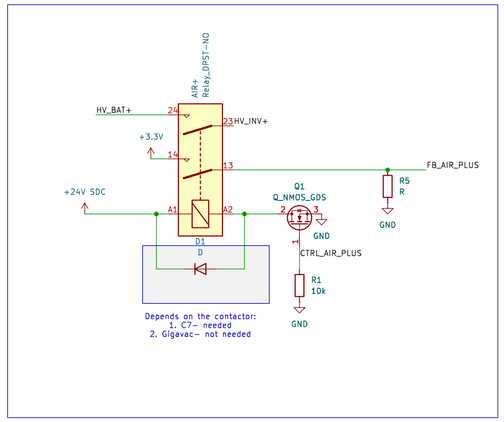

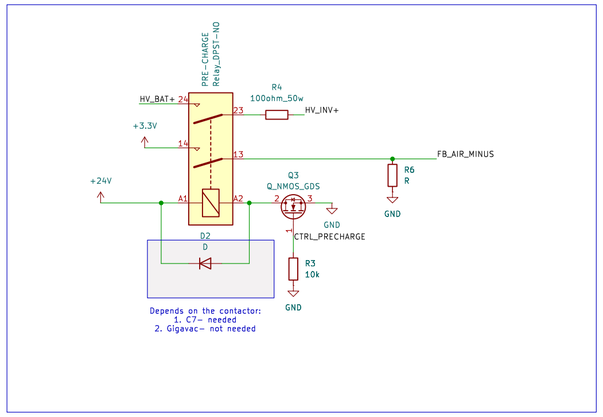

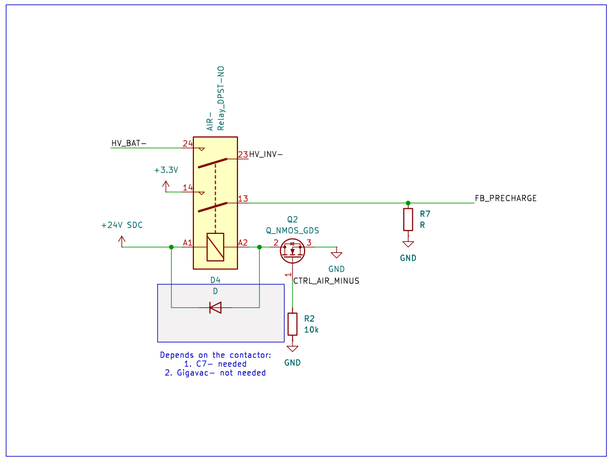

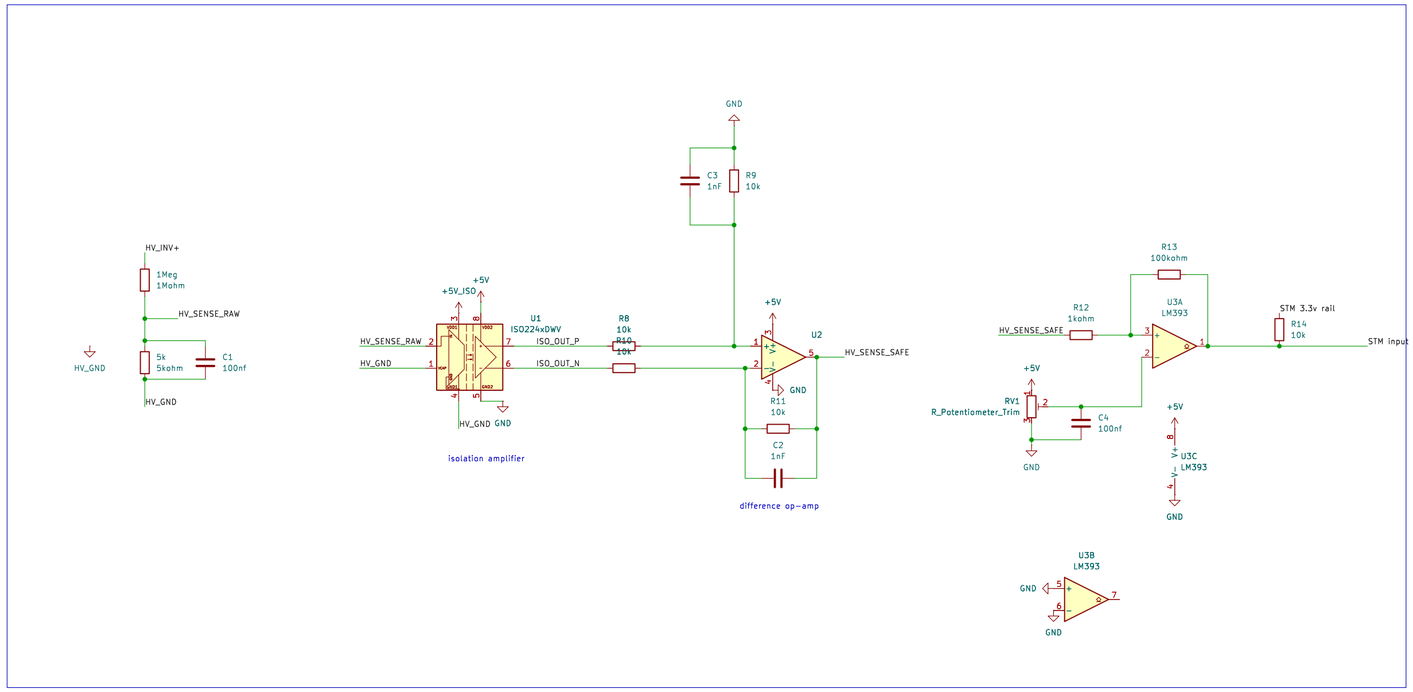

==========

HV PRECHARGE SENSING & HARDWARE THRESHOLD CIRCUIT

Overview:
This circuit safely steps down, isolates, and monitors the High Voltage (HV) traction bus. It provides both a continuous analog telemetry signal and a hardware-level digital trigger to the MCU for executing the Make-Before-Break precharge contactor sequence.

Stage 1: HV Attenuation
A 1MΩ / 5kΩ resistive voltage divider reduces the raw HV pack voltage down to a safe, measurable low-voltage range suitable for the isolation amplifier.

Stage 2: Galvanic Isolation (ISO224)
The stepped-down HV signal passes through an ISO224 precision isolation amplifier. This safely bridges the high-voltage and low-voltage domains, outputting a proportional differential signal while protecting the low-voltage control electronics from deadly potentials.

Stage 3: Differential to Single-Ended Conversion
An operational amplifier (U2) configured as a difference amplifier converts the ISO224's differential output into a clean, single-ended, ground-referenced analog voltage (HV_SENSE_SAFE).

Stage 4: Hardware Schmitt Trigger (LM393)
A dedicated voltage comparator (U3A) monitors HV_SENSE_SAFE against an adjustable reference voltage set by trimmer RV1.

RV1 is tuned to represent 95% of the maximum HV pack voltage.

R13 (100kΩ) provides positive feedback (hysteresis) to prevent signal chatter.

When the bus reaches 95%, the open-collector output releases, allowing an external 3.3V pull-up resistor to snap the STM32 input line HIGH. This hardware trigger commands the MCU to immediately close the Main AIR and subsequently open the Precharge relay.

Note: Unused comparator inputs (U3B) are tied to GND to prevent parasitic oscillation from EV powertrain EMI.

Sheet: /		
File: control_contactor_v2.kicad_sch		
Title:		
Size: A2	Date:	**Rev:**
KiCad E.D.A. 9.0.7		Id: 1/1