An efficient ECG signals denoising technique based on the combination of particle swarm optimisation and wavelet transform

Introduction

- Electrocardiogram (ECG) signals represent the electrical activity of the heart
- ECG signals are non-stationary in nature
- They are often corrupted by noise during acquisition
- Noise affects diagnosis accuracy
- Therefore, effective noise removal is essential

Problem Statement

- The main problem is to effectively remove noise from non-stationary ECG signals without distorting important cardiac features by optimally selecting wavelet denoising parameters.

Objectives

- Main Objective:
  - To reduce noise in ECG signals using Wavelet Transform
- Sub Objectives:
  - Decompose ECG signal into multiple levels
  - Apply thresholding to remove noise
  - Reconstruct denoised ECG signal

Noise Model

- When a signal is acquired or transmitted over a distance, it is frequently contaminated by noise due to environmental and system-related factors.

- According to the additive noise model, the observed (contaminated) signal is expressed as:

$$ECGnoisy(n)=s(n)+\delta e(n)$$

- $s(n)$ represents the clean ECG signal
- $e(n)$ represents the noise
- δ represents the amplitude of the noise,
- n is the sample number

Methodology

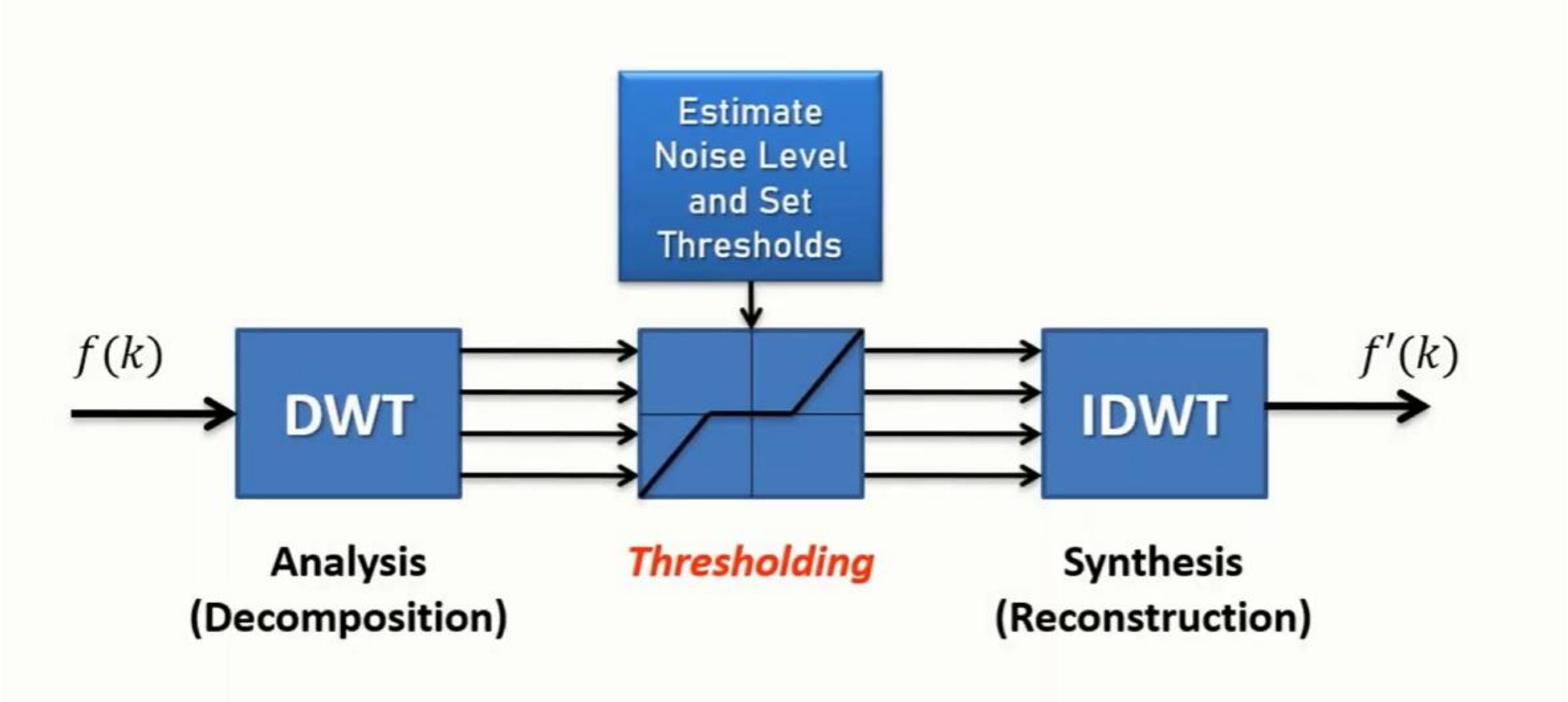

Decomposition

- The decomposition phase aims to separate the ECG signal into different frequency sub-bands:

  1. Approximation Coefficients(cA) - (Low-Frequency Component)
  2. Detail Coefficients(cD) - High-Frequency Component

- The ECG signal is decomposed into L levels.
  - At each level i, the signal is divided into two components:
    1. Approximation coefficients cA_i
    2. Detail coefficients cD_i
  - Only the approximation coefficients are further decomposed in the next level.

Decomposition

APPROXIMATION COEFFICIENTS (cA_i)

$$\boldsymbol{cA_i(t) = \sum_{k=-\infty}^{\infty} cA_{i-1}(K)\phi_i(t-K)}$$

- cA_i(t): Approximation coefficients at decomposition level i
- cA_i −1(k): Approximation coefficients from the previous level
- $\phi_i(t)$:shifiting function at level i
- K: summation index

DETAIL COEFFICIENTS (cD_i)

$$\boldsymbol{cD_i(t) = \sum_{k=-\infty}^{\infty} cD_{i-1}(K)\Psi_i(t-K)}$$

- $cD_i(t)$:Detail coefficients at decomposition level i
- $cD_i - 1(k)$:Approximation coefficients from the previous level
- *ψi(t):* scaling function at level i
- K: summation index

Total workflow

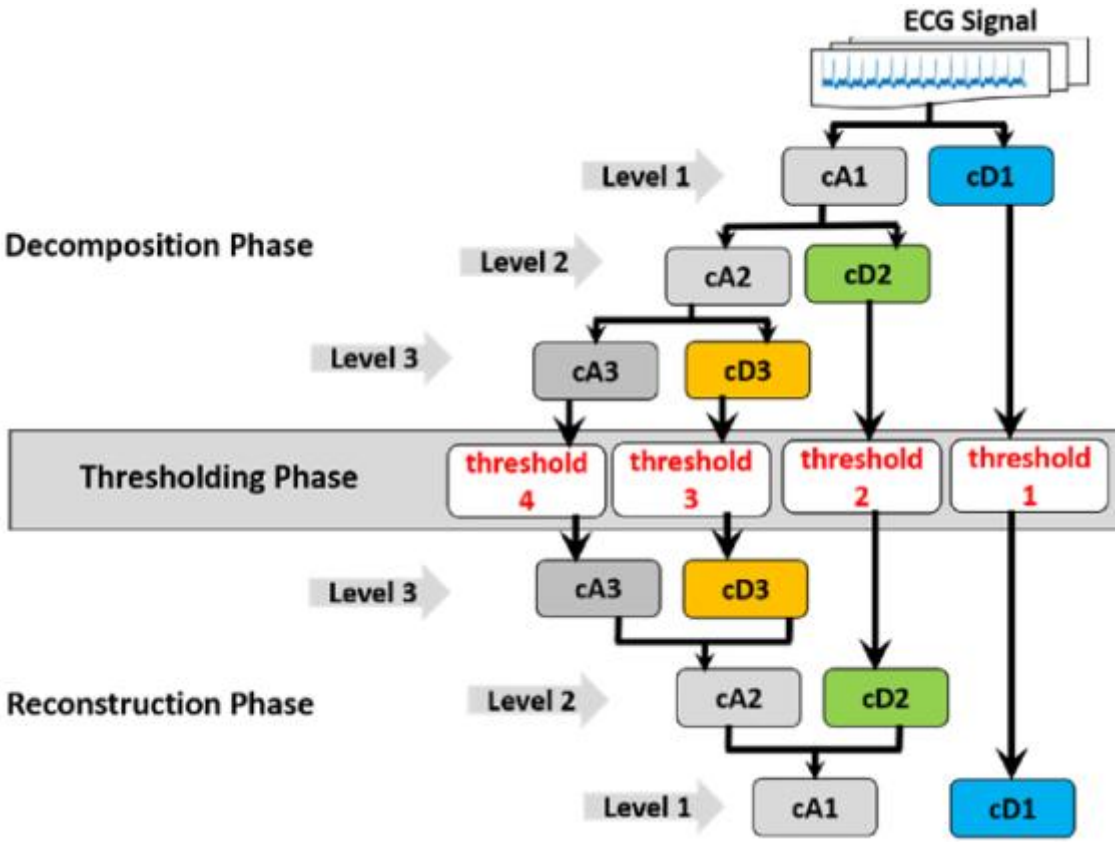

Thresholding

- The threshold values $\lambda$are calculated using the universal threshold (square-root log) method

$$\boldsymbol{\lambda_j = \sigma_j \sqrt{2\log(N_j)}}$$

λ_j →Threshold value at the j^{th}wavelet scale

Nj → Length of the noisy signal at the j^{th}scale

σ_j →Estimated noise standard deviation at scale j

$$\boldsymbol{\sigma_j = \frac{\mathrm{MAD}_j}{0.6745} = \frac{\mathrm{median}(|c|)}{0.6745}}$$

MAD_j →Median Absolute Deviation

c→ Wavelet coefficients at scale j

Thresholding

SOFT THRESHOLDING

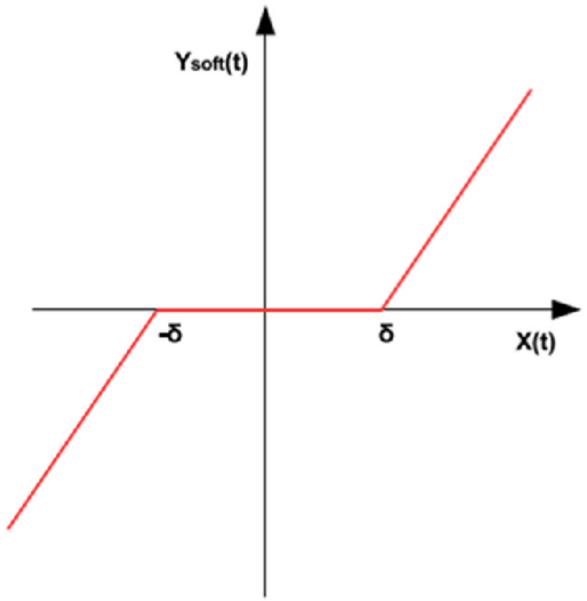

$$\widehat{x}_{di}(l) = \begin{cases} \widehat{x}_{di}(l) & |\widehat{x}_{di}(l)| \geq \delta_l \\ 0 & |\widehat{x}_{di}(l)| < \delta_l \end{cases}$$

HARD THRESHOLDING

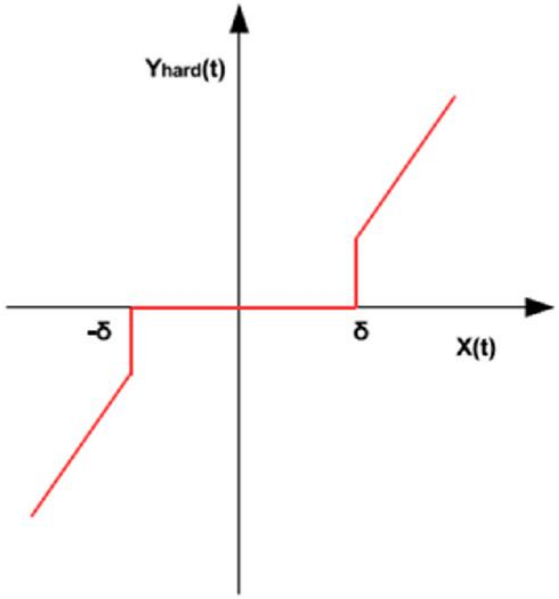

$$\widehat{x}_{di}(l) = \begin{cases} \widehat{x}_{di}(l) - |\delta_l| & |\widehat{x}_{di}(l)| \geq \delta_l \\ 0 & |\widehat{x}_{di}(l)| < \delta_l \end{cases}$$

Reconstruction

$$\boldsymbol{ECG_{\text{denoised}}(t) = \sum_{k=-\infty}^{\infty} cA_L(k)\ \phi(t-k)\ + \sum_{i=1}^{L}\sum_{=-\infty}^{\infty} \widehat{cD}_i(k)\ \psi_i(t-k)}$$

- $ECG_{denoised}(t)$ →Reconstructed (denoised) ECG signal
- $cA_L(k) \rightarrow$ Approximation coefficients at final level L
- $\widehat{cD}_i(k) \rightarrow$ Thresholded detail coefficients at level i
- ϕ(t) → Scaling (low-pass) function
- $\psi_i(t)$ →Wavelet (high-pass) function
- L → Total number of decomposition levels

Downsampling and Upsampling

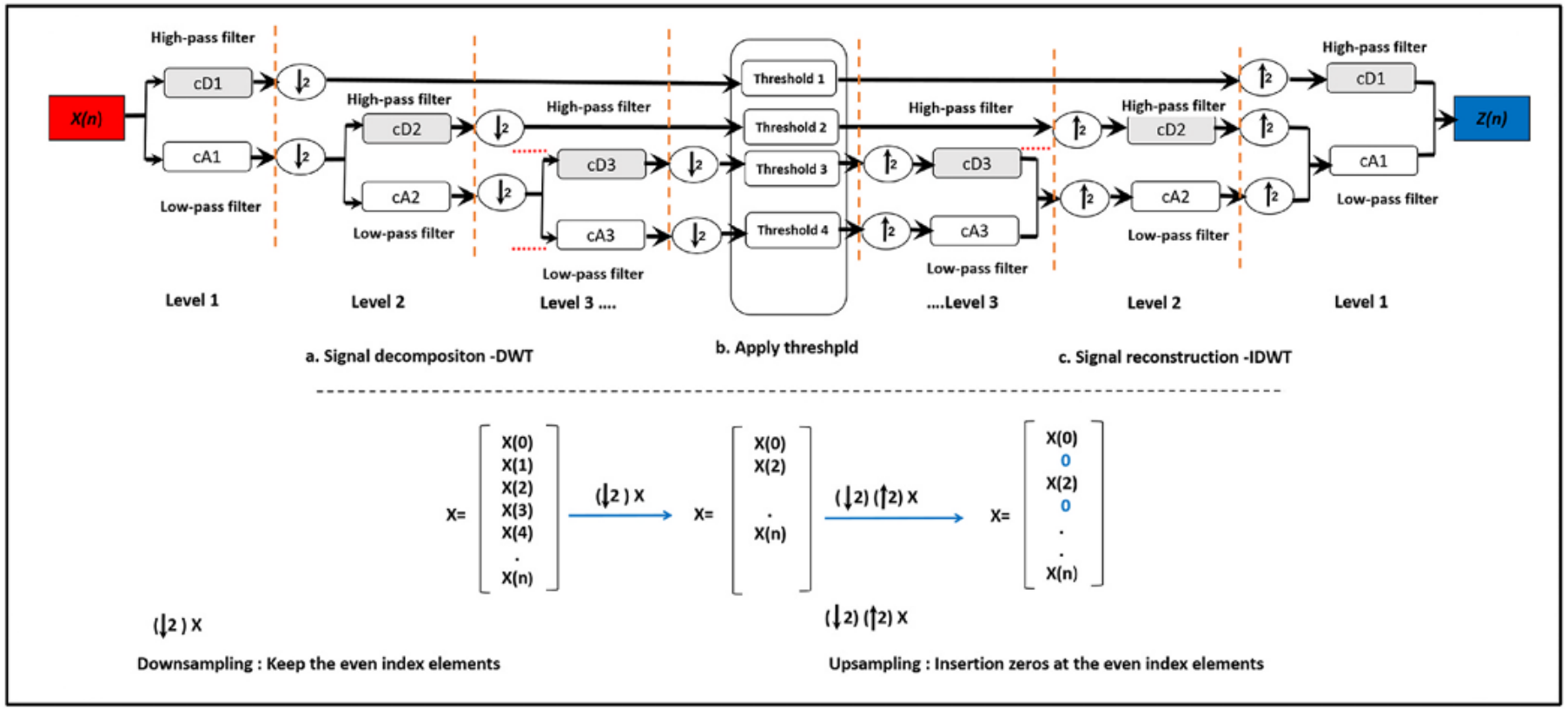

Fig. 5. ECG denoising procedure.

Conclusion

- ECG signals are affected by noise like WGN and Power Line Interference
- Wavelet Transform is good for ECG denoising.
- The method improves ECG quality by giving higher SNR and lower PRD
- The approach performs and removes both PLI and WGN noise effectively

Thank You