2024 1st International Conference on Innovative Sustainable Technologies for Energy, Mechatronics, and Smart Systems (ISTEMS) | 979-8-3503-8424-6/24/$31.00 ©2024 IEEE | DOI: 10.1109/ISTEMS60181.2024.10560100

Design of Controller for three-phase Grid-Connected Inverter Using Reinforcement Learning

Raj kumar Mahto
Department of Electrical and Electronics Engineering
BIT, Mesra
Ranchi,Jharkhand
mtee10003.22@bitmesra.ac.in

Pankaj Mishra
Department of Electrical and Electronics Engineering
BIT, Mesra
Ranchi,Jharkhand
pankajmishra@bitmesra.ac.in

Aftab Alam
Department of Electrical and Electronics Engineering
BIT, Mesra
Ranchi,Jharkhand
aftabalam5555@bitmesra.ac.in

***Abstract*— This paper introduces a method for designing a controller for a voltage source inverter (VSI) using Reinforcement Learning (RL). The proposed controller is based on RL Deep Deterministic Policy Gradient (RL-DDPG) algorithm, which independently updates its control gain online by the actor-critic structure without the knowledge of exact system model. The traditional controllers have a problems of model dependence, inadequate compromise between steady-state (SS) precision and dynamic responsiveness, resulting in complexity in controller gain tuning. The RL-DDPG agent is trained, tested, and validated. Following its implementation in the control system, it can furnish correction signals for robust control, leading to superior performance in minimizing SS error, ripple, and Total Harmonic Distortion (THD). Through simulation, the dynamic and SS performance of the RL-DDPG controller is compared with conventional proportional-Integral (PI) control. The simulation results show a reduction in THD and an improvement in current tracking performance.**

Keywords—Reinforcement Learning (RL), Neural Network, Voltage Source Inverter, Model-free control, DDPG algorithm, Actor-Critic, PI controller.

I. INTRODUCTION

Voltage Source Inverters (VSI) have been extensively used to integrate renewable energy sources into the grid and to power AC loads. To effectively reduce harmonic content while achieving an excellent output response, an appropriate control method is required to regulate the Voltage Source Inverter. Traditionally, inverters utilized in microgrids, when connected to the grid act as current sources and as voltage sources when operating autonomously [1]. Currently, the predominant configuration for inverters in microgrids is the voltage source inverter topology supplemented by a current controller to manage the current fed into the grid [2]. Current-controlled inverters offer several advantages, including precise control over instantaneous current, protection against peak currents, and excellent dynamic response. The effectiveness of the VSI relies heavily on the quality of the employed current control approach. In order to satisfy power quality standards, inverters must possess a robust capability for rejecting harmonics. Various current-controlled strategies, such as proportional-integral (PI), proportional-resonant (PR), deadbeat (DB), and hysteresis controllers, have been proposed [2], [3]. The classical PI controller has been extensively utilized for controlling VSIs. Nevertheless, current approaches for tuning PI controller gains still necessitate knowledge of system model parameters, highlighting the susceptibility of the PI controller to variations in system parameters. Moreover, the majority of PI controllers utilize constant control gains across all operating conditions. This inflexibility means that significant changes in system operating conditions can impact the desired output. Also, it inherently has difficulty balancing steady-state and transient control performance [3]. The PR-control scheme is popular because of its ability to eliminate steady-state errors while regulating sinusoidal signals effectively [4]. However, it still uses constant controller gains, which are tuned based on the system's model. For the best performance of the resonant controller, the controller's resonant frequency must match that of the grid frequency. Therefore, it necessitates adaptive adjustment of the controller frequency in response to any variations in grid frequency detected within the utility network [4]. DB predictive control is commonly employed for current-error compensation and provides high performance for current-controlled VSIs. However, its control actions are computed directly based on the system's model, rendering DB control highly responsive to variations in system parameters [5]. Hysteresis control offers a straightforward approach to managing systems and yields fast response, but it often leads to high and variable switching frequencies, resulting in increased current ripple, diminished current quality, and challenges in designing the output filter. Achieving a fixed switching frequency requires increasing the complexity of the controller, especially if employing an adaptive band hysteresis controller [6]. Model Predictive Control (MPC), which necessitates a system model to forecast the subsequent behavior of variables over a specified time horizon, has limited applications in power converter control. This is primarily due to the extensive computational requirements for addressing the optimization problem online, a feature that is incompatible with the short sampling times typically employed in converter control [7]. To tackle the challenges posed by existing control methods, such as reliance on models, compromise between dynamic and SS performance, and the complexity of controller gain adjustments, this paper introduces a reinforcement learning controller based on the RL-DDPG algorithm. In recent years, many researchers have proposed new intelligent control technologies using artificial intelligence (AI) and machine learning (ML) [8],[9]. Fuzzy logic control offers advantages in handling complex systems with uncertain inputs through its reliance on fuzzy set theory [10], but designing and implementing fuzzy rules can be challenging due to its subjective nature, rule base size, parameter tuning requirements, computational complexity, and integration challenges [11]. The primary drawback of a neural network (NN)-based controller lies in its dependence on supervised learning, which demands a large amount of labeled data for training [12],[13]. Additionally, these controllers may lack

Authorized licensed use limited to: University of Tokyo. Downloaded on February 08,2026 at 07:36:33 UTC from IEEE Xplore. Restrictions apply.

the ability to adapt and learn online, as they typically require retraining on new data to accommodate changes in the environment or task requirements. On the other hand, the RL-DDPG controller can learn from experience through direct interaction with the environment via actions and rewards [14]. The training of the RL-DDPG is relies upon the interaction between the controller and the system, eliminating the need for an offline dataset [15].

II. SYSTEM MODELLING

Grid-connected inverters are fundamental components responsible for transmitting power into the grid. In general, having inverter's dynamic model is essential to evaluate its dynamic behavior for studying overall system stability and designing the controller. Figure 1 represents the configuration of a grid-tied three-phase $(3-\emptyset)$ VSI with an RL-DDPG controller. Equations (1)-(6) shows the average equations for the output inductor voltage $u_{L(a,b,c)}$ and current $i_{L(a,b,c)} = i_{o(a,b,c)}$.

$$\langle u_{La}\rangle = d_A\langle u_{in}\rangle - r_{eq}\langle i_{La}\rangle - \langle u_{an}\rangle - \langle u_{nN}\rangle \tag{1}$$

$$\langle u_{Lb}\rangle = d_B\langle u_{in}\rangle - r_{eq}\langle i_{Lb}\rangle - \langle u_{bn}\rangle - \langle u_{nN}\rangle \tag{2}$$

$$\langle u_{Lc}\rangle = d_B\langle u_{in}\rangle - r_{eq}\langle i_{Lc}\rangle - \langle u_{cn}\rangle - \langle u_{nN}\rangle \tag{3}$$

$$\langle i_{oa}\rangle = \langle i_{La}\rangle \tag{4}$$

$$\langle i_{ob}\rangle = \langle i_{Lb}\rangle \tag{5}$$

$$\langle i_{oc}\rangle = \langle i_{Lc}\rangle \tag{6}$$

The angle bracket in the above relationship denotes average values, where $r_{eq} = r_{sw} + r_L$ and $r_L = r_{L(a,b,c)}$. The equivalent resistance encompasses both the on-state switch resistance (r_{sw}) and the resistance of inductor (r_L) .Additionally, $d_{A,B,C}$ represents the duty ratio. Space vector theory enables the transformation of a $3-\emptyset$ variable $x_{a,b,c}(t)$ into a single complex value $x_{\alpha,\beta}(t)$ as shown in equation (7).

$$\left.\begin{aligned} x(t) &= \tfrac{2}{3}\left(x_a(t)e^{j0} + x_b(t)e^{j2\pi/3} + x_c(t)e^{j4\pi/3}\right) \\ &= |x(t)|e^{j\emptyset} = x_\alpha(t) + jx_\beta(t) \end{aligned}\right\} \tag{7}$$

Multiplying the transformation by 2/3 results in the space vector's magnitude becoming equal to the maximum value of the variables in the balanced and symmetrical $3-\emptyset$ system. Multiply (1) with $\frac{2}{3}e^{j0}$, (2) with $\frac{2}{3}e^{j2\pi/3}$, and (3) with $\frac{2}{3}e^{j4\pi/3}$ and then summing them together using (7).

$$\langle u_L\rangle = \boldsymbol{d}\langle u_{in}\rangle - r_{eq}\langle \boldsymbol{i_L}\rangle - \langle \boldsymbol{u_0}\rangle - \langle u_{nN}\rangle - \tfrac{2}{3}\left(e^{j0} + e^{j2\pi/3} + e^{j4\pi/3}\right)\langle u_{nN}\rangle \tag{8a}$$

$$\langle u_L\rangle = \boldsymbol{d}\langle u_{in}\rangle - r_{eq}\langle \boldsymbol{i_L}\rangle - \langle \boldsymbol{u_0}\rangle \tag{8b}$$

Where $\left(e^{j0} + e^{j2\pi/3} + e^{j4\pi/3} = 0\right)$

Equation (8b) and (8b) represents the average equation in stationary reference frame (α-β). Rewriting equation 8(b) we get (9).

$$\frac{d\langle \boldsymbol{i_L}\rangle}{dt} = \frac{1}{\boldsymbol{L}}\left[\boldsymbol{d}\langle u_{in}\rangle - r_{eq}\langle \boldsymbol{i_L}\rangle - \langle \boldsymbol{u_0}\rangle\right] \tag{9}$$

Where

$$\boldsymbol{L} = L_{abc}$$

$$\boldsymbol{d} = \frac{2}{3}\left(d_A e^{j0} + d_B e^{j2\pi/3} + d_C e^{j4\pi/3}\right)$$

$$\langle \boldsymbol{i_L}\rangle = \frac{2}{3}\left(\langle i_{La}\rangle e^{j0} + \langle i_{Lb}\rangle e^{j2\pi/3} + \langle i_{Lc}\rangle e^{j4\pi/3}\right)$$

$$\langle \boldsymbol{u_0}\rangle = \frac{2}{3}\left(\langle u_{an}\rangle e^{j0} + \langle u_{bn}\rangle e^{j2\pi/3} + \langle u_{cn}\rangle e^{j4\pi/3}\right)$$

Once the three-phase variables are converted into stationary reference frame (α-β), these space-vectors are further converted to (d-q) synchronous reference frame. This transformation from AC quantities to constant DC quantities proves advantageous for the SS stability analysis of power electronics converters. Equation (11) represents the space-vector in synchronous reference frame (SRF) and d-q subscript denotes the real and imaginary components.

$$x^s(t) = x(t)e^{-j\omega t} = x_d + jx_q \tag{11}$$

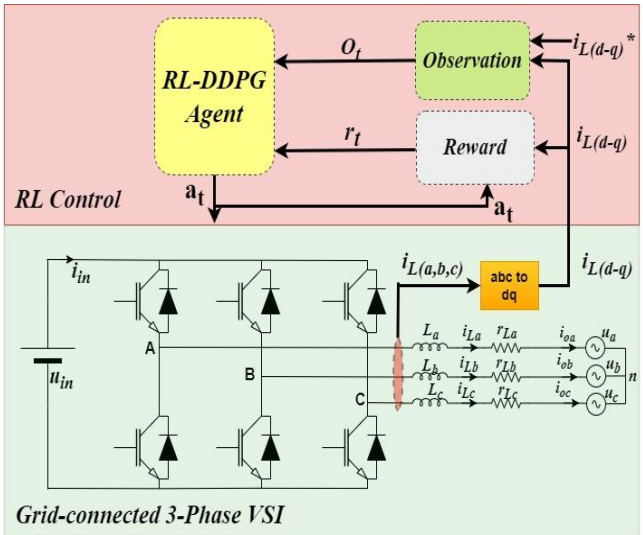

Fig. 1 Architecture of Reinforcement Learning control

In (11), ω_s represents the grid frequency and superscripts denote the synchronous reference frame. Transforming equation (9) into the synchronous (d-q) frame using equation (11):

$$\begin{aligned} \frac{d(\langle i_L^s\rangle e^{j\omega_s t})}{dt} &= \frac{1}{L}d^s\langle u_{in}\rangle e^{j\omega_s t} - \frac{r_{eq}}{L}\langle i_L^s\rangle e^{j\omega_s t} - \frac{1}{L}\langle u_0^s\rangle e^{j\omega_s t} \\ &= \tfrac{1}{L}\left(d^s\langle u_{in}\rangle e^{j\omega_s t} - \left(r_{eq} + j\omega L\right)\langle i_L^s\rangle e^{j\omega_s t} - \tfrac{1}{L}\langle u_0^s\rangle e^{j\omega_s t}\right) \end{aligned} \tag{12}$$

Consequently, from equation (12), we derived (13) as:

$$\frac{d\langle i_L^s\rangle}{dt} = \tfrac{1}{L}\left(d^s\langle u_{in}\rangle - \left(r_{eq} + j\omega L\right)\langle i_L^s\rangle - \langle u_0^s\rangle\right) \tag{13}$$

$$\frac{d\langle i_{Ld} + ji_{Lq}\rangle}{dt} = \tfrac{1}{L}\left[\left(d_d + jd_q\right)\langle u_{in}\rangle - \left(r_{eq} + j\omega_s L\right)\langle i_{Ld} + ji_{Lq}\rangle - \langle u_{od} + ju_{oq}\rangle\right] \tag{14}$$

Finally, we separate (14) along d-axis and q-axis component as:

$$\frac{d\langle i_{Ld}\rangle}{dt} = \tfrac{1}{L}\left[d_d\langle u_{in}\rangle - r_{eq}\langle i_{Ld}\rangle + \omega_s L\langle i_{Lq}\rangle - \langle u_{od}\rangle\right] \tag{15}$$

Authorized licensed use limited to: University of Tokyo. Downloaded on February 08,2026 at 07:36:33 UTC from IEEE Xplore. Restrictions apply.

$$\frac{d\langle i_{Lq}\rangle}{dt} = \frac{1}{L}\left[d_q\langle u_{in}\rangle - r_{eq}\langle i_{Lq}\rangle - \omega_s L\langle i_{Ld}\rangle - \langle u_{od}\rangle\right] \quad (16)$$

$$\langle i_{od}\rangle = \langle i_{Ld}\rangle \quad (17)$$

$$\langle \mathrm{i_{oq}}\rangle = \langle \mathrm{i_{Lq}}\rangle \quad (18)$$

Equations (15)-(18) comprise the large-signal model of the inverter in SRF. In the selected control approach of grid voltage-oriented control, the alignment of the d-axis with the inverter's output voltage space vector is pivotal, as it ensures that active power is determined exclusively by the d-axis current, while the q-axis component dictates reactive power. Moreover, to keep unity power factor operation for the converters, the SS value of the grid current and voltage in the q-channel should be zero. Under these circumstances, inverter injects only active power into the grid.

$$P = U_{od} I_{Ld} \quad (19)$$

Equation (19), signifies that only active power is supplied into the grid. The VSI's large-signal average model equations encompass a nonlinear term. Developing a linear model requires the derivation of small-signal equations centered on a predefined operating point [16].

$$\frac{d\hat{\imath}_{Ld}}{dt} = \frac{1}{L}\left[\hat{d}_d U_{in} + D_d \hat{u}_{in} - r_{eq}\hat{\imath}_{Lq} + \omega_s L\hat{\imath}_{Ld} - \hat{u}_{od}\right] \quad (20)$$

$$\frac{d\hat{\imath}_{Lq}}{dt} = \frac{1}{L}\left[\hat{d}_q U_{in} + D_q \hat{u}_{in} - r_{eq}\hat{\imath}_{Lq} + \omega_s L\hat{\imath}_{Ld} - \hat{u}_{oq}\right] \quad (21)$$

$$\hat{\imath}_{od} = \hat{\imath}_{Lq} \quad (22)$$

$$\hat{\imath}_{oq} = \hat{\imath}_{Lq} \quad (23)$$

(20) – (23) express the small-signal equations centered on a SS operating point.

$$\left.\begin{aligned} \frac{d\hat{x}(t)}{dt} &= A\hat{x}(t) + B\hat{u}(t) \\ \hat{y}(t) &= C\hat{x}(t) + D\hat{u}(t) \end{aligned}\right\} \quad (24)$$

Equation (24) illustrates the state space equations.

$$\hat{x}(t) = \begin{bmatrix}\hat{\imath}_{Ld} & \hat{\imath}_{Lq}\end{bmatrix}^T \quad (25)$$

$$\hat{u}(t) = \begin{bmatrix}\hat{u}_{in} & \hat{u}_{od} & \hat{u}_{oq} & \hat{d}_d & \hat{d}_q\end{bmatrix}^T \quad (26)$$

$$\hat{y}(t) = \begin{bmatrix}\hat{\imath}_{od} & \hat{\imath}_{oq}\end{bmatrix}^T \quad (27)$$

(25), (26) and (27) represents the state vector, input vector and output vector of the system, respectively. The state matrices A, B, C and D can be obtained from (20)-(23) as:

$$A = \begin{bmatrix} \frac{-r_{eq}}{L} & \omega_s \\ -\omega_s & \frac{-r_{eq}}{L} \end{bmatrix}, \quad B = \begin{bmatrix} \frac{D_d}{L} & \frac{-1}{L} & 0 & \frac{-U_{in}}{L} & 0 \\ \frac{D_q}{L} & 0 & \frac{-1}{L} & 0 & \frac{-U_{in}}{L} \end{bmatrix}$$

$$C = \begin{bmatrix} 1 & 0 \\ 0 & 1 \end{bmatrix}, \quad D = \begin{bmatrix} 0 & 0 & 0 & 0 & 0 \\ 0 & 0 & 0 & 0 & 0 \end{bmatrix}$$

III. INTRODUCTION TO RL

Reinforcement Learning (RL) is an algorithm that operates within the framework of Markov Decision Processes (MDP). In an MDP, the state at the next time step is solely determined by the present state, independent of the previous state, and the environment is fully observable. The agent is provided with observations and a reward, which are generated based on a predefined function, serving as its inputs [17].

A. *Observation*

The observation module retrieves the observation value o_t from the environment and transfers it to the agent, as illustrated in Figure 2. In this paper, the observation module is $\left[i_d, i_q, i_{dref}, i_{qref}\right]^T$, where i_d, i_q, are components along the dq-axis of the output current at time t, and i_{dref}, i_{qref} are the output current reference along dq-axis.

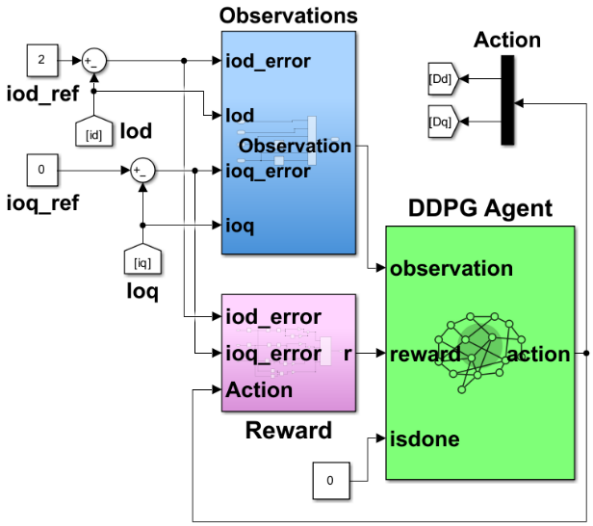

Fig. 2 Implementation of the DDPG agent in Simulink

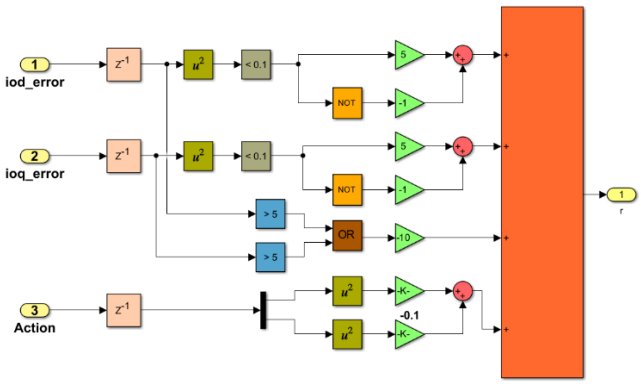

Fig.3 Implementation of reward function in Simulink

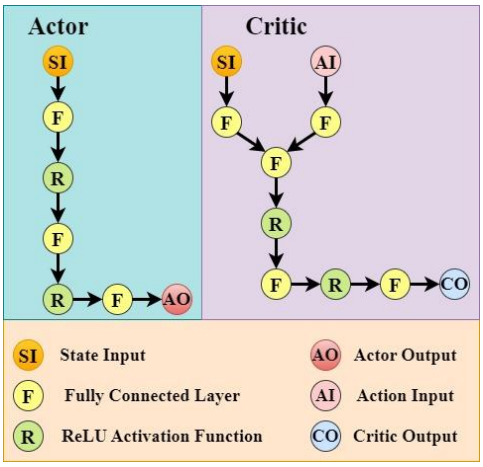

Fig.4 Configuration of Actor-Critic Deep Neural Network

Authorized licensed use limited to: University of Tokyo. Downloaded on February 08,2026 at 07:36:33 UTC from IEEE Xplore. Restrictions apply.

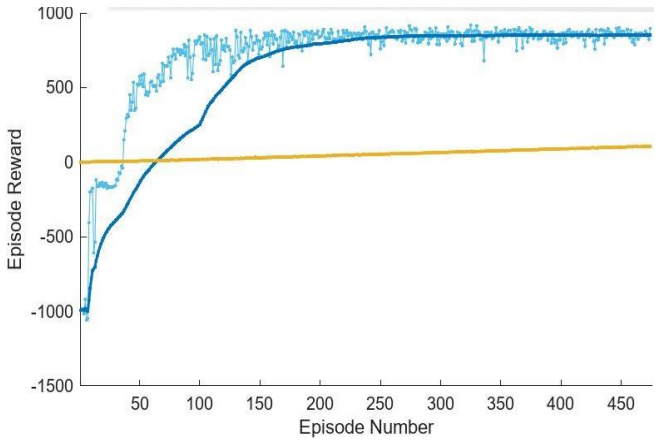

Fig. 5 Training result of DDPG algorithm

B. *Reward*

The core principle of RL is to strive for maximum reward, which serves as the fundamental metric for evaluating actions. To enhance the achievement of zero current tracking error and increase the sensitivity of the inverter's dynamic response, a reward function for the inverter is formulated in equation (30) as:

$$r = -\left(p_1 i_{derror}^2 + p_2 i_{qerror}^2 + p_3 \sum (u_{t-1})^2\right) \tag{30}$$

Where u_{t-1} is the actions from the previous step, $p_1, p_2, \& \, p_3$ represent weighting factors, by adjusting these factors can refine the reward function to more accurately reflect the actual performance condition of the inverter. The reward serves as an immediate measure of the success of the preceding action (taken from the preceding state) in accomplishing the task goal.

C. *Agent*

The agent consists of two main components: a policy, responsible for mapping current observations to a probability distribution of possible actions, and a learning algorithm. The learning algorithm iteratively adjusts the parameters of policy, with the objective is to identify the most favorable policy that optimizes for maximum expected combined reward over the duration of the task. Rewards and penalties are employed to train RL agents. Figure 3 illustrates the implementation of the reward function in MATLAB/Simulink, where our agent receives a reward for making a good decision and incurs a penalty for making a bad one.

IV. DDPG ALGORITHM

The RL-DDPG algorithm is an off-policy actor-critic based learning method that operates online, without requiring a model [18]. A DDPG agent, functioning as an actor-critic RL agent, aims to discover most favorable policy that maximizes the expected combined reward.

A. *Actor-Critic*

The DDPG algorithm leverages deep learning technology and actor-critic architecture to establish deterministic policies. In this algorithm, both the critic and actor utilize deep neural networks to approximate functions. DDPG merges the advantages of both policy-based and value-based methods. The actor selects actions, while the critic evaluates the action's quality and advises adjustments. The critic assesses the value function, which may pertain to either action-value or state value. The actor updates the policy according to the output value provided by the critic network.

B. *Configuration of the Neural Network (NN)*

The convergence speed of the agent is significantly influenced by the architecture of Deep NN. Therefore, selecting an appropriate neural network structure during training is crucial, as it can impact the training process and cause the results to deviate from the desired goal. Figure 4 illustrates the configuration of the deep NN for both the actor and critic. The Rectified Linear Unit (ReLU) activation function employed in this network is a non-linear. It effectively replaces negative values with zero, enabling the network to comprehend intricate patterns and enhance convergence during training. By zeroing out the output of certain neurons, the ReLU function effectively reduces parameter dependency and mitigates the occurrence of overfitting.

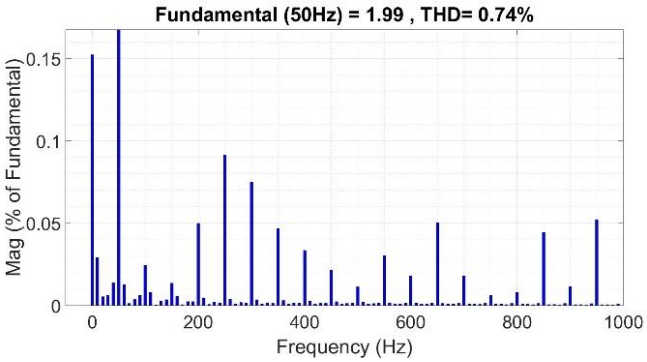

(6a) THD of RL-DDPG controller

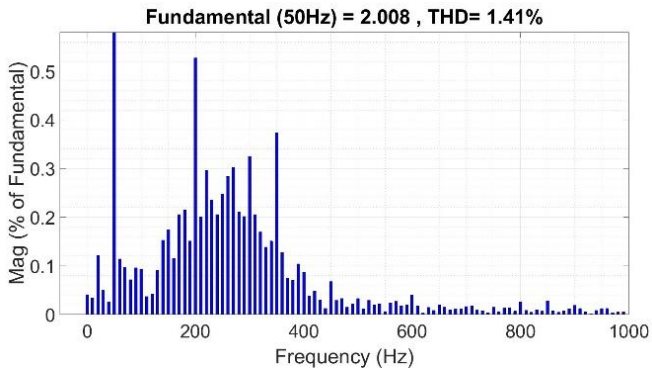

(6b) THD of PI controller

Fig.6 THD of VSI load current

Table I. SIMULATION PARAMETERS

Parameter	Value
Input voltage	35 V
System frequency	50Hz
Load inductor	0.73mH
Load resistor	1Ω
Switching frequency	10kHz
Grid voltage (peak)	8.6 V

V. SIMULATION VERIFICATION

To evaluate the effectiveness of the RL-DDPG controller, a $3-\emptyset$ inverter is constructed on Simulink. Furthermore, the

Authorized licensed use limited to: University of Tokyo. Downloaded on February 08,2026 at 07:36:33 UTC from IEEE Xplore. Restrictions apply.

traditional PI controller is employed to regulate the inverter for comparative analysis. The specific simulation parameters are provided in Table 1. Figure 5 illustrates the final training results of the DDPG algorithm. The light blue line illustrates the actual reward (Episode reward), while the dark blue line portrays the average reward, and the yellow line indicates the estimate of the discounted long-term reward (episode Q0) at the beginning of each episode during the agent training process. As training advances, if the critic is effectively designed and learns efficiently, Episode Q0 gradually converges to the average of the true discounted long-term reward, despite potential discrepancies due to discounting. In this training scenario, the termination reward is set to 900. It is evident that the termination condition is met by the 250th training episode. Furthermore, the reward remains stable until the 500th training episode, indicating that the agent has achieved its objective. To facilitate a comparison, the results of two controllers are consolidated in Table II. Figure 6 illustrates that the THD of the load current produced by the VSI controlled by RL is 47% lower than that controlled by PI. In dynamic performance, settling time of PI controller and RL-DDPG controller is almost same. However, the overshoot in PI controller is more than the RL-DDPG controller as shown in figure 7. PI controller requires more cycles to achieve steady-state and the ripple in load current also can be seen. Additionally, during transient period the load current waveform shown in figure 8, fluctuates more in PI controller than the RL-DDPG controller. The PI controller often trades off dynamic performance for improved steady-state performance, or vice versa, RL-DDPG control is trained via neural networks to achieve suitable nonlinear control of the inverter, ultimately resulting in superior performance in both dynamic and steady-state operations.

Table II. COMPARISION OF CONTROLLERS

Steady-state performance of controllers		
	RL-DDPG controller	**PI controller**
THD	0.74%	1.41%
Dynamic performance		
Settling time	0.028s	0.025s
Overshoot	8%	35%

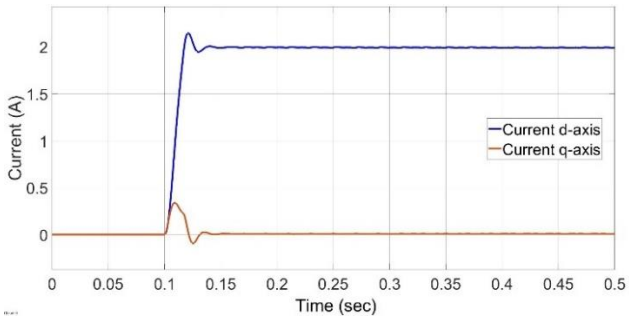

(7a) d-q axis component using RL control

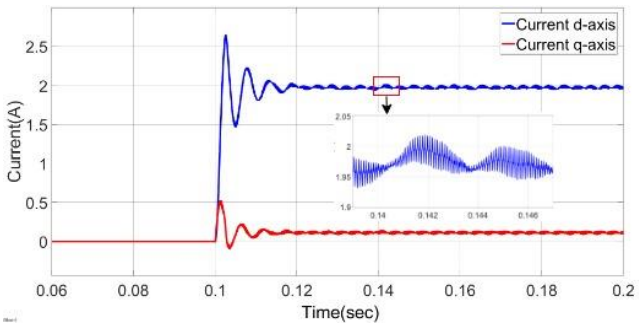

(7b) d-q axis component using PI control

Fig.7 d-q axis output current

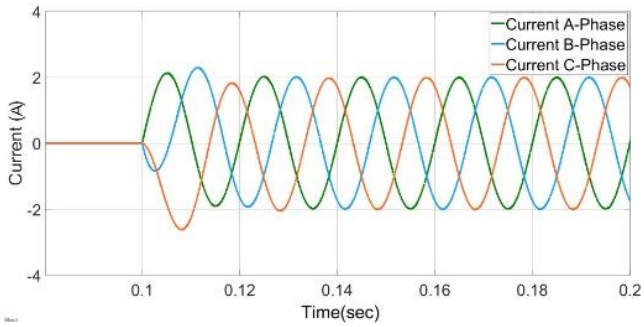

(8a) RL-DDPG controller

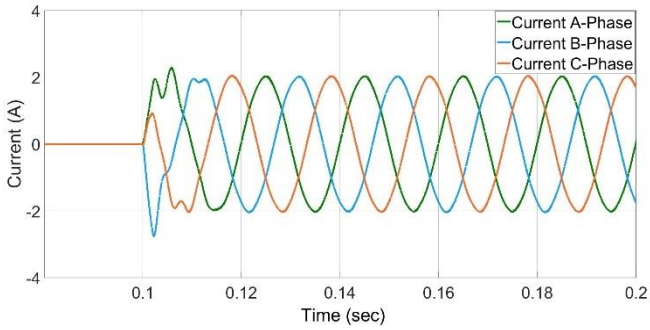

(8b) PI controller

Fig.8 Load current waveform of VSI

VI. CONCLUSION

This paper introduces a controller based on the RL-DDPG algorithm to govern the $3-\emptyset$ VSI with RL load. Compared with the conventional PI control method, the proposed control algorithm does not depend on system model, which leverages the characteristics of model-free training in RL. DDPG algorithm-based controller perform well in both steady-state and dynamic condition. However, due to the presence of deep neural network, it takes certain amount of time to train the model. Moreover, the construction of reward function is a crucial part of RL-DDPG control because system performance depends on reward function.

REFERENCES

[1] T. Hornik and Q. -C. Zhong, "A Current-Control Strategy for Voltage-Source Inverters in Microgrids Based on $H^{\infty }$ and Repetitive Control," in IEEE Transactions on Power Electronics, vol. 26, no. 3, pp. 943-952, March 2011, doi: 10.1109/TPEL.2010.2089471.

[2] F. Blaabjerg, R. Teodorescu, M. Liserre and A. V. Timbus, "Overview of Control and Grid Synchronization for Distributed Power Generation Systems," in IEEE Transactions on Industrial Electronics, vol. 53, no. 5, pp. 1398-1409, Oct. 2006, doi: 10.1109/TIE.2006.881997.

[3] A. Timbus, M. Liserre, R. Teodorescu, P. Rodriguez and F. Blaabjerg, "Evaluation of Current Controllers for Distributed Power Generation Systems," in IEEE Transactions on Power Electronics, vol. 24, no. 3, pp.

Authorized licensed use limited to: University of Tokyo. Downloaded on February 08,2026 at 07:36:33 UTC from IEEE Xplore. Restrictions apply.

654-664, March 2009, doi: 10.1109/TPEL.2009.2012527.

[4] A. V. Timbus, M. Ciobotaru, R. Teodorescu and F. Blaabjerg, "Adaptive resonant controller for grid-connected converters in distributed power generation systems," Twenty-First Annual IEEE Applied Power Electronics Conference and Exposition, 2006. APEC '06., Dallas, TX, USA, 2006, pp. 6 pp.-, doi: 10.1109/APEC.2006.1620754.

[5] J. M. Espi, J. Castello, R. García-Gil, G. Garcera and E. Figueres, "An Adaptive Robust Predictive Current Control for Three-Phase Grid-Connected Inverters," in IEEE Transactions on Industrial Electronics, vol. 58, no. 8, pp. 3537-3546, Aug. 2011, doi: 10.1109/TIE.2010.2089945.

[6] S. Buso, S. Fasolo, L. Malesani and P. Mattavelli, "A dead-beat adaptive hysteresis current control," in IEEE Transactions on Industry Applications, vol. 36, no. 4, pp. 1174-1180, July-Aug. 2000, doi: 10.1109/28.855976.

[7] S. Kouro, P. Cortes, R. Vargas, U. Ammann and J. Rodriguez, "Model Predictive Control—A Simple and Powerful Method to Control Power Converters," in IEEE Transactions on Industrial Electronics, vol. 56, no. 6, pp. 1826-1838, June 2009, doi: 10.1109/TIE.2008.2008349.

[8] S. Zhao, F. Blaabjerg and H. Wang, "An Overview of Artificial Intelligence Applications for Power Electronics," in IEEE Transactions on Power Electronics, vol. 36, no. 4, pp. 4633-4658, April 2021, doi: 10.1109/TPEL.2020.3024914.

[9] E. Mohammadi, M. Alizadeh, M. Asgarimoghaddam, X. Wang and M. G. Simões, "A Review on Application of Artificial Intelligence Techniques in Microgrids," in IEEE Journal of Emerging and Selected Topics in Industrial Electronics, vol. 3, no. 4, pp. 878-890, Oct. 2022, doi: 10.1109/JESTIE.2022.3198504.

[10] A. Habibi, B. Yousefi, A. N. Shirazi and M. Rezvani, "Adaptive Neuro-Fuzzy Damping Controller of Grid-Connected Microgrid Hybrid System Integrating Wind Farms and Batteries," in IEEE Access, vol. 12, pp. 8022-8037, 2024, doi: 10.1109/ACCESS.2023.3312272.

[11] S. N. V. B. Rao, Y. V. Pavan Kumar, M. Amir and F. Ahmad, "An Adaptive Neuro-Fuzzy Control Strategy for Improved Power Quality in Multi-Microgrid Clusters," in *IEEE Access*, vol. 10, pp. 128007-128021, 2022, doi: 10.1109/ACCESS.2022.3226670.

[12] Y. Gao, S. Wang, T. Dragicevic, P. Wheeler and P. Zanchetta, "Artificial Intelligence Techniques for Enhancing the Performance of Controllers in Power Converter-Based Systems—An Overview," in IEEE Open Journal of Industry Applications, vol. 4, pp. 366-375, 2023, doi: 10.1109/OJIA.2023.3338534.

[13] S. Yarikkaya and K. Vardar, "Neural Network Based Predictive Current Controllers for Three Phase Inverter," in IEEE Access, vol. 11, pp. 27155-27167, 2023, doi: 10.1109/ACCESS.2023.3258679.

[14] X. Wang et al., "Deep Reinforcement Learning: A Survey," in IEEE Transactions on Neural Networks and Learning Systems, 2022, doi: 10.1109/TNNLS.2022.3207346.

[15] C. Xiang et al., "A Novel Deep Deterministic Policy Gradient Assisted Learning-Based Control Algorithm for Three-Phase DC/AC Inverter with an RL Load," in IEEE Journal of Emerging and Selected Topics in Power Electronics, vol. 11, no. 6, pp. 5529-5539, Dec. 2023, doi: 10.1109/JESTPE.2022.3174638.

[16] Esfandiari, A., Hashemnia, M.N. A study on the dynamic model of a three-phase grid-connected inverter and an innovative method for its verification. Int J Syst Assur Eng Manag 13, 1508–1522 (2022).

[17] A. Rajamallaiah, S. P. K. Karri, M. L. Alghaythi and M. S. Alshammari, "Deep Reinforcement Learning Based Control of a Grid Connected Inverter With LCL-Filter for Renewable Solar Applications," in IEEE Access, vol. 12, pp. 22278-22295, 2024, doi: 10.1109/ACCESS.2024.3364058.

[18] M. Gheisarnejad, H. Farsizadeh and M. H. Khooban, "A Novel Nonlinear Deep Reinforcement Learning Controller for DC–DC Power Buck Converters," in IEEE Transactions on Industrial Electronics, vol. 68, no. 8, pp. 6849-6858, Aug. 2021, doi: 10.1109/TIE.2020.3005071.

Authorized licensed use limited to: University of Tokyo. Downloaded on February 08,2026 at 07:36:33 UTC from IEEE Xplore. Restrictions apply.