# Universal Smart Power Module (USPM) for Carbon Neutral Society

Yoshikazu Takahashi[1*], Yoshinari Ikeda[2], Hiroki Watanabe[3], and Jun-ichi Itoh[3]
1 Center for Innovative Integrated Electronic Systems, Tohoku University, Miyagi, Japan
2 Semiconductors Business Group, Fuji Electric Co., Ltd, Nagano, Japan
3 Department of Electrical, Electronics and Information Engineering,
Nagaoka University of Technology, Niigata, Japan
*E-mail: y-taka@cies.tohoku.ac.jp

***Abstract*—The concept and results of the Universal Smart Power Module (USPM), which can respond instantaneously to fluctuating power sources such as solar and wind power, and can fully address the rapidly expanding renewable energy market by combining universality and smartness, will be explained. The built-in controller of the USPM can respond (feedback) to command values received from the master controller at high speed and with high precision, thus enabling high-speed control of fluctuating power sources. In addition to a power conversion main circuit and a high-speed controller, the USPM consists of a gate driver and an EMI filter. This means that the USPM features simplified power electronics design. Conventional power electronics design requires a variety of know-how and specialized skills. USPM can simplify the design of power electronic systems because it can be configured by simply connecting variations of USPM. The core power module that consists of the USPM was made ultra-compact to create the universality that is a feature of the USPM. As the technology for ultra-miniaturization, ADB (Atomic Diffusion Bonding) was developed and applied to the drain side of the SiC-MOSFET to achieve low thermal resistance, and bumping technology to the source side of it to achieve low inductance. The newly developed core power module is approximately 1/3 the volume of a general-purpose Si-IGBT module. The USPM, which can easily configure power electronics products, and the ultra-compact core power module, which enables the realization of USPM, will contribute to the realization of a carbon-neutral society.**

**Keywords— USPM, Core power module, Energy management, Carbon neutral,**

## I. INTRODUCTION

Currently, the research and development of technologies to stabilize power supply, including the use of renewable energy sources such as solar and wind power generation as main power sources and the storage battery function of electric vehicles (EVs), as well as energy management technologies for these sources, is an urgent issue.

One of the key fundamental technologies in the realization of a carbon-neutral society is power electronics technology, and its applications range from small- and medium-capacity to large-capacity in a variety of fields, as shown in Figure 1. In such an electric energy society, there is an urgent need to build next-generation energy management systems that optimally operate power supply. under these circumstances, research and development of USPM (Universal Smart Power Module) is being conducted in "Energy System in IoE Society," one of the themes of the 2nd SIP (FY 2018-2022) of the Cabinet Office.

USPM is a new power controller that is both fast and precise, and simplifies power electronics design. It is characterized by the fact that power electronics design can be completed simply by changing the USPM connections, even without any power electronics design know-how.

For renewable energies such as solar and wind power to become the main power source, instantaneous power

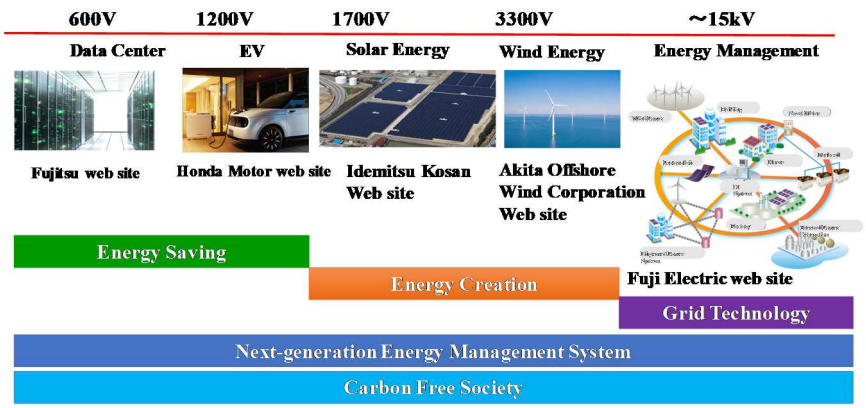


Fig.1 Next-generation Energy management Systems indispensable for a Carbon Free Society.

©2022IEEJ

Authorized licensed use limited to: University of Tokyo. Downloaded on February 17,2026 at 04:54:42 UTC from IEEE Xplore. Restrictions apply.

stabilization by combining power converters with high-speed controllers and large-capacity storage batteries or storage batteries for EVs is important for fluctuating power. Generally, such power converters are optimally designed for each application. It should be noted that circuit design requires specialized expertise in such areas as heat dissipation, noise filtering, power, and operating frequency. One of the factors hindering the spread of renewable energy and electric vehicles is the enormous amount of time and cost involved in the trial-and-error process of circuit development. Therefore, with the spread of renewable energy and electric vehicles, there is a need for faster power electronics design.

Thus, the newly developed USPM is positioned as a key technology for next-generation energy management systems in the Internet of Energy (IOE) society because it not only enables high-speed and precise control, but also simplifies the design of power electronics.

This paper describes the concept of USPM, which contributes to the realization of a next-generation energy management system essential for a carbon-neutral society, the experimental results, and the elemental technologies and experimental results of ultra-small core power modules that are important for the realization of USPM.

## II. Universal Smart Power Module (USPM)

Fig. 2 shows the schematic diagram of USPM [1]. USPM is a multifunctional building block that handles-power rating from a few hundred watts to several kilowatts. Power electronics building blocks (PEBBs) are currently being actively researched worldwide based on the same concept to achieve high scalability and reduced manufacturing costs. PEBB integrates the several feature such as the power conversion and gate driver on the standardized hardware. PEBB simplifies the power electronics design, and it provides the above benefits [2]-[7]. However, even this PEBB, like conventional system design, requires specialized skills for power electronics design.

UPSM has all fundamental components such as the main circuit, gate driver, EMI filter, detection circuit, cooling system, and high-speed controller into the module. The aim of the USPM concept is that the simplification of the power electronics design in order to develop the power electronics systems without long lead- time. USPM independently behaves as the power converter with small power rating. USPM system realizes the power electronics systems by only variation of connection of USPM without complicate hard and soft ware design. Especially, numerous power converter specifications including voltage, current, and power rating are achieved by the series or parallel connection of USPM.

The following elemental technologies have been developed to realize the above excellent functions of USPM.

1) Ultra-high-speed feedback control by a controller in USPM utilizing sampling technology of several tens of MHz.
2) Autonomous distributed control of multiple USPMs by eliminating signal lines by applying wireless communication (Bluetooth)
3) Optimization of switching waveform of ultra-high speed WBG power device by active gate drive technology and high-speed controller
4) A new control method that stabilizes the operation of independent distributed control modulus connected in series or in parallel.
5) New noise filter technology that uses both active and passive method that can attenuate wideband noise.

Fig. 3 shows the USPM system configuration. This system consists of multiple USPMs and a master controller that controls the operation of USPMs. USPM composes any power conversion systems including DC-DC, DC-AC, AC/DC, and AC/AC power conversion with simple configuration. The master controller controls all USPM,

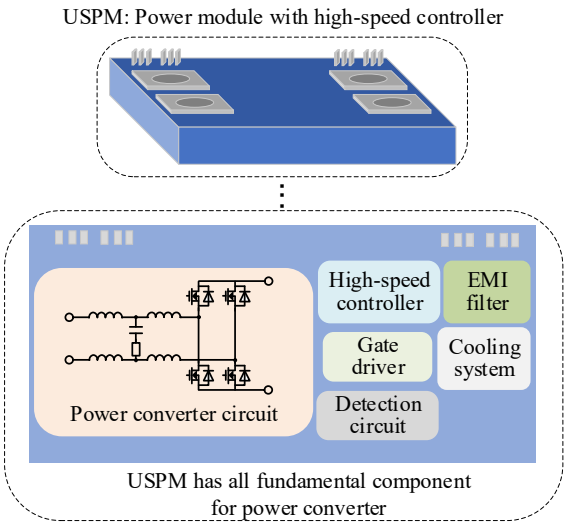


Fig.2. Schematic diagram of USPM.

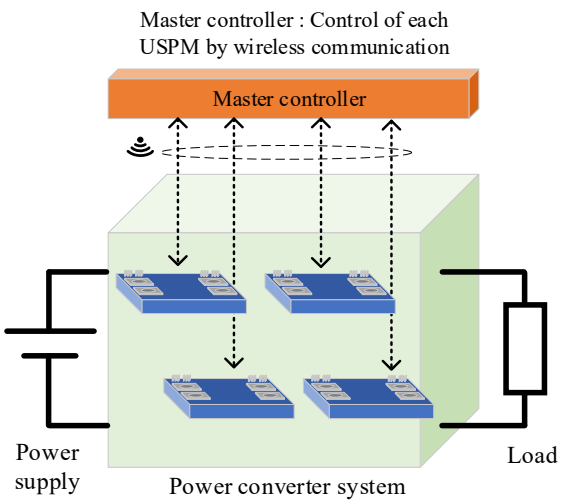


Fig.3. USPM system configuration


Authorized licensed use limited to: University of Tokyo. Downloaded on February 17,2026 at 04:54:42 UTC from IEEE Xplore. Restrictions apply.

and it transfer the signals such as the voltage or current command for the feedback control to the high-speed controller in USPMs. Each USPM receive these command value from the master controller, and generate the required waveforms for the power converter system.

In USPM systems, the communication between the master controller and high-speed controllers in each USPM is achieved by the wireless communication to reduce the signal wire in the system. This is because the power converter system using USPM requires a lot of USPM in order to implement the several kilo watt systems. In this case, many USPM has to communicate to the master controller through the high-speed controller. However, a lot of signal wire decays the system reliability. In order to solve this problem, the wireless communication such as the Bluetooth is applied for the communication between the master controller and the high-speed controller.

Fig.4 shows the example of application for USPM. Fig.4 introduces the power storage system with the renewable energy sources and the battery. The conventional system requires the several power converters such as the DC/DC converter and DC/AC converter. However, the development of each power converter requires the professional skills for the power electronics. On the other hand, USPM is applied instead of these power converters. As the result, the system design is drastically simplified compared to traditional power electronics systems. The USPM has the many possibility to improve the power electronics design, and it may become a new trend for future power electronics systems. Especially, USPM has the high-speed feedback owing to the high-speed controller. Therefore, it quickly adapts various conditions such as the instantaneous voltage fluctuation of the system.

In next chapter, the core power module of USPM is introduced.

## III. Core Power Module

The core power module, a component of the USPM, was developed to achieve low thermal resistance and low inductance in order to maximize the characteristics of WBG devices such as SiC, GaN, and $Ga_2O_3$. These low thermal resistance and low inductance enable overwhelming miniaturization compared to conventional power modules, aiming to make a significant contribution to the universality of USPM.

Figure 5 shows a comparison of the newly developed core power module (SiC-MOSFET applied) and a conventional IGBT module. The volume of the newly developed core power module is about 1/3 of that of the conventional IGBT module, making it very suitable for the USPM configuration.

Figure 6 shows the outline of the core power module and the applied technology [9]. The core power module has 2 in 1 structure (which constitutes the upper and lower arms of the inverter) and has a capacity of 600V/100A (the device used is SiC-MOSFET). This prototype core module has high heat dissipation forced-air cooling fins. By bump connection between the source side of the SiC-MOSFET

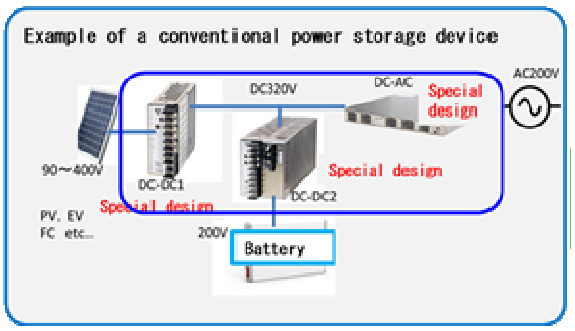


(a) Conventional power storage device

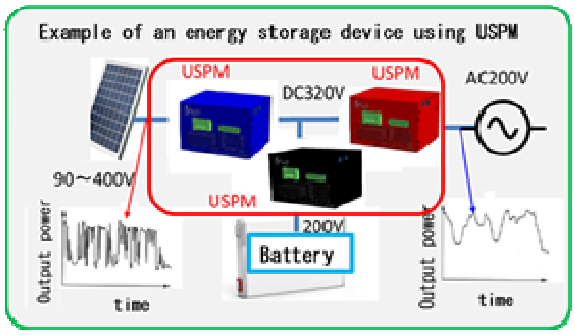


(b) Energy storage device using USPM.

Fig.4. Example of application for USPM.

and the copper circuit pattern, low inductance is achieved without wire bonding [10].

ADB (atomic diffusion bonding) as a direct joining technology was applied between the drain side of the SiC-MOSFET and the copper circuit pattern to achieve low thermal resistance [11]. This is the first attempt in the power module field. In fig.10 it also shows a TEM image of the ADB layer, confirming an ideal bond without voids.

Figure 7 shows an infrared temperature measurement result IR view (IR camera: AVIONICS R300SR-H) when a current is applied. It has been confirmed that the thermal resistance (Rth) of the core power module when bonded by ADB is about 33% lower than that when bonded by solder bonding.

Moreover, the core power module parasitic inductance, which is very important for high-frequency operation and USPM controllability. Figure 8 shows the inductance evaluation circuit diagram. With reference to the JEC-2407 standard, we calculated the inductance from the differential voltage and current change (di/dt) on the P-side and N-side of the core power module when the device was switched (turn-off). To measure the parasitic inductance of the core power module, Tektronix's MSO58 as an oscilloscope and TIVH08 as a probe were used. Then the core power module had achieved 10 nH or less as shown in fig.9 [12]. This 10 nH of core power module inductance is decreased about 80% compared with the conventional module as shown in fig.10.

The new elemental technologies described above enable a significant miniaturization of the core power module, which is very useful when configuring the USPM.


Authorized licensed use limited to: University of Tokyo. Downloaded on February 17,2026 at 04:54:42 UTC from IEEE Xplore. Restrictions apply.

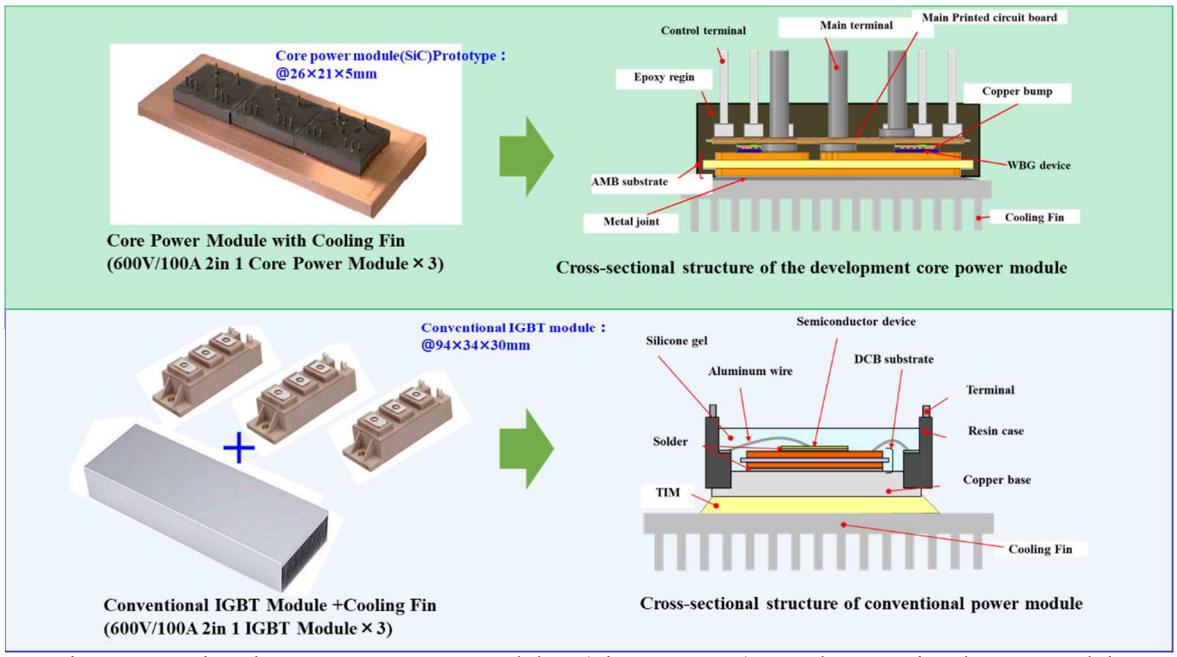


Fig.5 Comparison between core power module (SiC-MOSFET) and conventional IGBT module

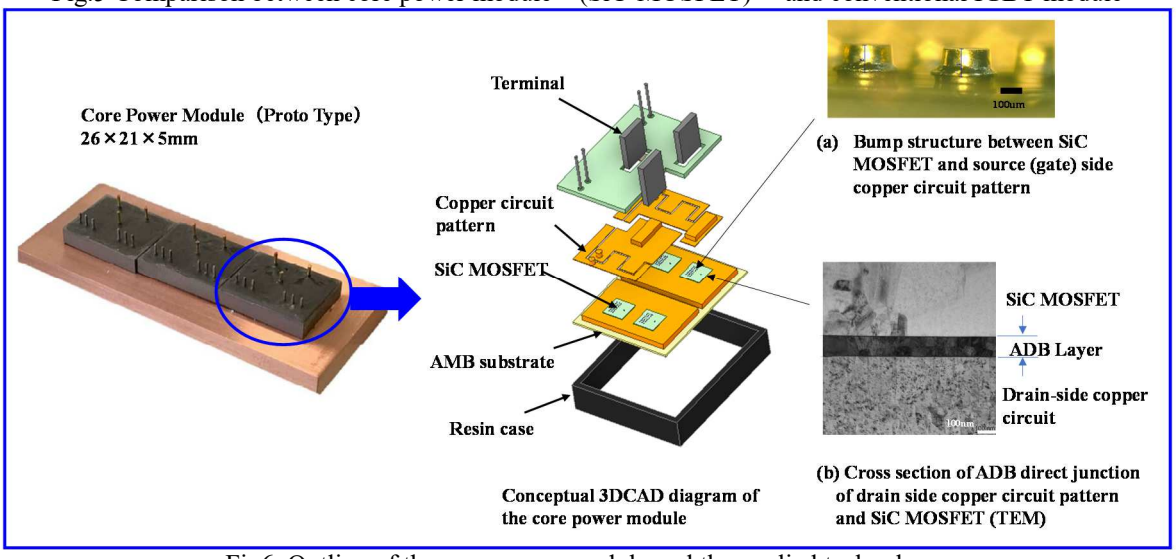


Fig6. Outline of the core power module and the applied technology.

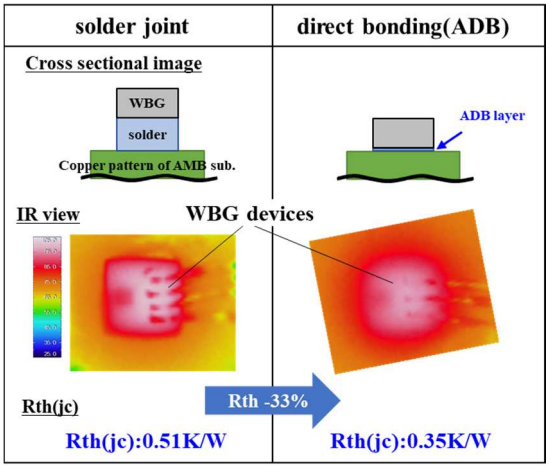


Fig.7 IR view of device temperature both of solder joint and ADB.



Authorized licensed use limited to: University of Tokyo. Downloaded on February 17,2026 at 04:54:42 UTC from IEEE Xplore. Restrictions apply.

## IV. Example of USPM System for AC/AC Power Converter

Figure 11 shows the example of the USPM systems for AC-AC power converter [8]. In this system, a current type, a voltage type, and isolated type USPM are implemented to the AC-AC power converter system. In this system, each USPMs are connected by the Input-Series-Output-Parallel (ISOP) connection in order to reduce the voltage and current stress of USPM. The current type USPM behaves as the current source converter. Therefore, the Automatic Current Regulator (ACR) is applied for USPM control. On the other hand, the Automatic Voltage Regulator (AVR) is applied for voltage type USPM.

The communication between the master and the high-speed controller in USPM is achieved by the wireless communication as shown in fig.2. The wireless communication cannot transfer the instantaneous physical information due to the communication delay. Therefore, the master controller transfers the steady-state information such as the RMS value to each high-speed controller.

In USPM systems, each USPM operates independently. Actually, each USPM control interferes to the other control. In order to solve this problem, a droop control is applied for each USPM control.

Fig. 12 shows the equivalent circuit of the voltage droop control and the current droop control [8]. The droop control stabilizes the feedback control in distributed control as USPM. In case of the multi-parallel condition, each voltage control become unstable due to the mismatch of each voltage in transient behavior, and the error of the detection gain. In order to stabilize the voltage control, the droop control provides the impedance characteristics in AVR. On the other hand, the current control in each USPM becomes unstable when USPMs are connected in series as shown in fig. 4(b). Therefore, the admittance characteristics is added in ACR.

Fig.13 shows the control block diagram with current droop control [2]-[4]. The current droop control consists of virtual droop admittance $Y_d$, and a first-order low-pass-filter to avoid the recursive calculation.

Fig. 14 shows the experimental result of AC/AC converter with USPM. The current-droop control stabilizes the operation of USPMs which are connected in series. In this experiment, a single-phase AC / AC converter is configured by USPMs. According to fig.8 (a), the input current has the distortion due to the unbalance of the DC voltage. On the other hand, according to fig.8 (b), the current droop control compensates the voltage unbalance. As the result, the sinusoidal current waveform is obtained.

From the experimental result, it was confirmed that the AC/AC converter with USPM provides the pure sinusoidal waveforms by the proposed control.

## V. Conclusion

The concept and experimental results of the Universal Smart Power Module (USPM), which can instantly respond to fluctuating power sources such as solar and wind power, combine universality and smartness, and fully address the rapidly expanding renewable energy market was explained.

The new technologies such as low-inductance bumping connection and low thermal resistance atomic diffusion bonding (ADB) has been developed to realize ultra-compact core power modules, which are essential for the USPM.

The USPM can be controlled at very high speeds by providing each with a high-speed controller to have an

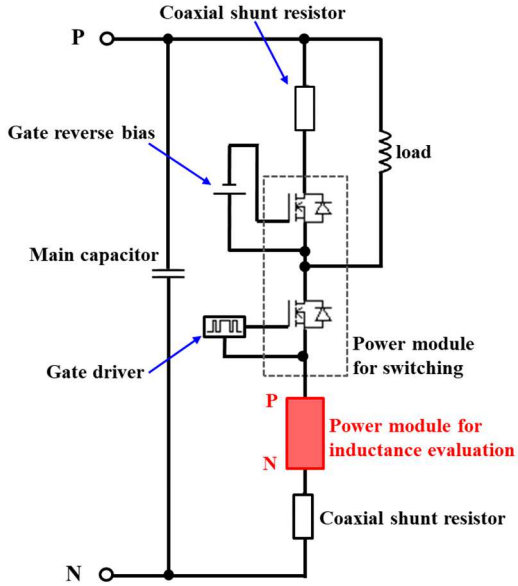


Fig.8 Parasitic inductance evaluation circuit diagram.

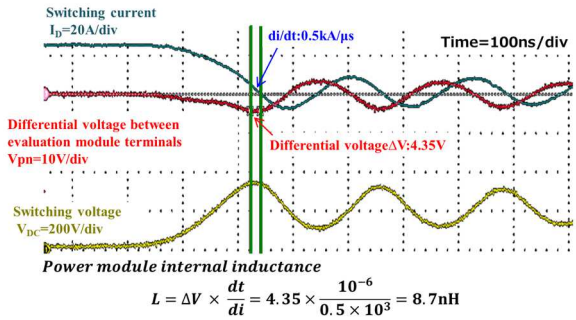


Fig.9 Parasitic inductance evaluation results of the core power module.

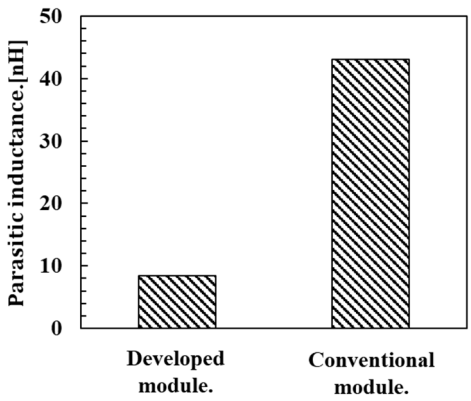


Fig.10 Parasitic inductance of the core power module and conventional power module.


Authorized licensed use limited to: University of Tokyo. Downloaded on February 17,2026 at 04:54:42 UTC from IEEE Xplore. Restrictions apply.

edge-like role, and can handle appropriate control of fluctuating power sources such as solar power.

In addition, power electronic devices with flexible and versatile functions such as the USPM have not been developed in the past, and the fact that the USPM enables the development of power electronic devices without need for design know-how by integrating a lot of technical know-how into USPM will have a significant impact.

USPM is expected to contribute to advanced next-generation energy management systems to realize a carbon-neutral society.

ACKNOWLEDGMENT

This paper was supported in part by the 2nd SIP project "Energy Systems for IoE Society" of the Cabinet Office, Government of Japan (Administrative Corporation JST), for which we would like to express our deepest gratitude.

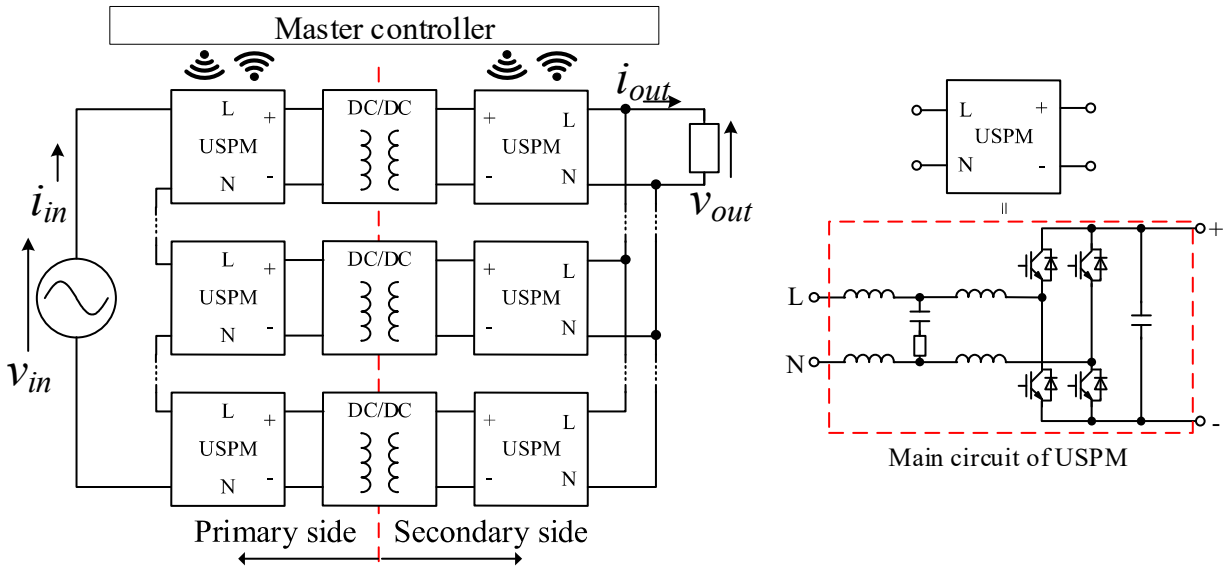


Fig.11 Circuit configuration of AC/AC converter with USPM.

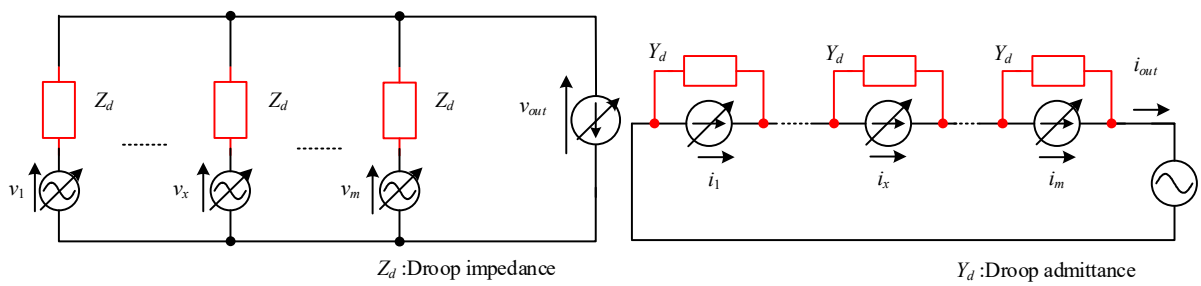


(a) Voltage droop control (b) Current droop control

Fig. 12 Equivalent circuit of droop control for USPM.

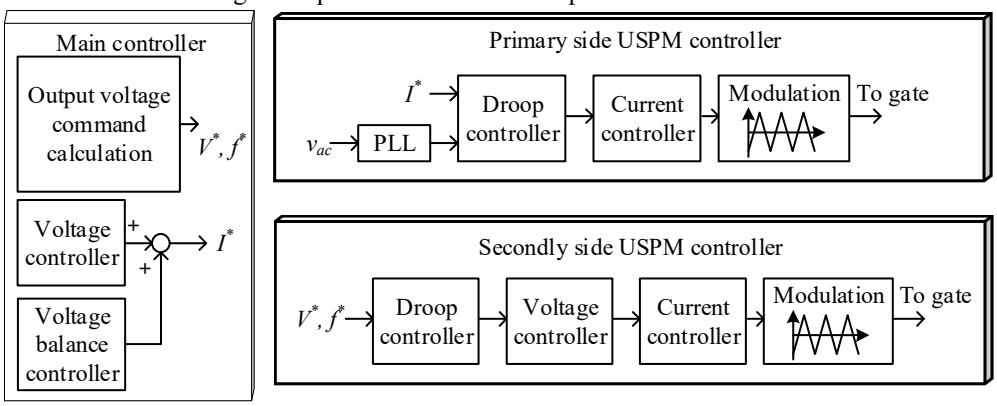


Fig.13 Control block diagram of USPM.



Authorized licensed use limited to: University of Tokyo. Downloaded on February 17,2026 at 04:54:42 UTC from IEEE Xplore. Restrictions apply.

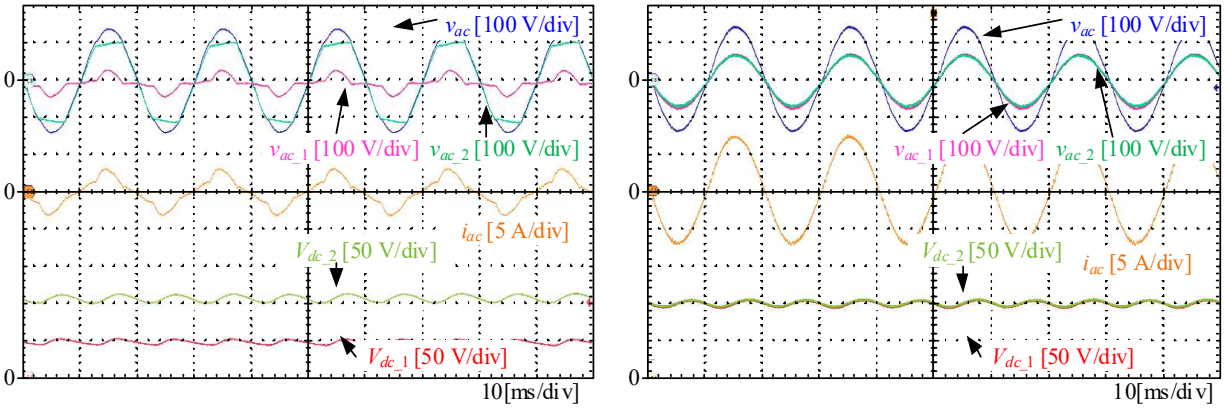


(a) Without proposed control (b) With proposed control

Fig.14 Experimental result of USPM systems.

## REFERENCES


[1] K. Yamanokuchi, H. Watanabe, J. Itoh: "Universal Smart Power Module Concept with High-speed Controller for Simplification of Power Conversion System Design", IEEE 2021 - Energy Conversion Congress & Exposition - Asia (ECCE Asia 2021), pp. 2484-2489 (2021)

[2] Y. Han et al., "Reduced-Order Model for Dynamic Stability Analysis of Single-Phase Islanded Microgrid With BPF-Based Droop Control Scheme," IEEE Access, 2019, vol. 7, pp. 157859-157872.

[3] J. C. Vasquez, R. A. Mastromauro, J. M. Guerrero and M. Liserre, "Voltage Support Provided by a Droop-Controlled Multifunctional Inverter," in IEEE Transactions on Industrial Electronics, vol. 56, no. 11, pp. 4510-4519, 2009.

[4] A. R. Iyer, R. P. Kandula, R. Moghe, J. E. Hernandez, F. C. Lambert and D. Divan, "Validation of the Plug-and-Play AC/AC Power Electronics Building Block (AC-PEBB) for Medium-Voltage Grid Control Applications," IEEE Trans. Industry Applications, vol. 50, no. 5, pp. 3549-3557, Sept.-Oct. 2014.

[5] H. Song, J. Wang, Y. Xu, R. Burgos and D. Boroyevich, "A High-Density Single-Turn Inductor for a 6 kV SiC-based Power Electronics Building Block," 2020 IEEE Applied Power Electronics Conference and Exposition, 2020, pp. 1127-1134.

[6] A. Deshpande, Y. Chen, B. Narayanasamy, Z. Yuan, C. Chen and F. Luo, "Design of a High-Efficiency, High Specific-Power Three-Level T Type Power Electronics Building Block for Aircraft Electric-Propulsion Drives," IEEE Journal of Emerging and Selected Topics in Power Electronics, 2020, vol. 8, no. 1, pp. 407-416.

[7] J. Wang, R. Burgos, D. Boroyevich and Z. Liu, "Design and Testing of 1 kV H-bridge Power Electronics Building Block Based on 1.7 kV SiC MOSFET Module," 2018 International Power Electronics Conference (IPEC-Niigata 2018 -ECCE Asia), Niigata, 2018.

[8] K. Yamanokuchi, H. Watanabe, J. Itoh: "Droop-based Current Control Method in Autonomous Distributed Modular Power Conversion System", IEEE Applied Power Electronics Conference and Exposition 2021, pp. 660-667 (2021)

[9] Akira Hirao, et al.: Low thermal resistance and low inductance power module with WBG device, mate2022, pp149-152

[10] Tadatomo Suga, Kai Takeuchi, Seongbin Shin, Nora Martinez, Yoshinari Ikeda, Akira Hirao, and Motohito Hori,"Low temperature bonding of Cu bump to WBG device using the surface activation method", 2021 International Conference on Electronics Packaging, (2021)

[11] Y. Watabe, F. Goto, M. Uomoto and T. Shimatsu, "Preliminary Study of Atomic Diffusion Bonding in Air using Ag films", 2021 7th International Workshop on Low Temperature Bonding for 3D Integration, (2021).

[12] Yusuke Abe, Akira Hirao, Ryoichi Kato, Yoshinari Ikeda, Victor Parque, Muhammad Khairi Faiz, Makoto Yoshida, Tomoyuki Miyashita,"Design Optimization of Copper Patterns and Location of Power Semiconductors and Terminals", 2021 International Conference on Electronics Packaging, (2021)




Authorized licensed use limited to: University of Tokyo. Downloaded on February 17,2026 at 04:54:42 UTC from IEEE Xplore. Restrictions apply.