CMOS Inverter Design Using Synopsys Custom Compiler

Practical Implementation and Pre-Layout Simulation

Technology Node: SAED 32/28nm Tool: Synopsys Custom Compiler, PrimeWave

Overview

This document records the design and verification of a CMOS inverter using Synopsys Custom Compiler and PrimeWave. The work is carried out using the SAED 32/28nm PDK and focuses on schematic creation, symbol generation, testbench setup, simulation configuration, netlist generation, and waveform verification.

Design Flow

The inverter design is documented through the following sequence:

1. Schematic
2. Symbol
3. Testbench
4. Simulation Setup
5. Netlist and Run
6. Output Waveform
7. Verification

1 CMOS Inverter

1. Schematic

The CMOS inverter schematic consists of a PMOS transistor with its source connected to VDD and an NMOS transistor with its source connected to VSS. The gates of both transistors are tied together at the input node (vin), and their drains are connected at the output node (vout). The PMOS is sized wider than the NMOS to compensate for the lower mobility of holes and achieve balanced switching.

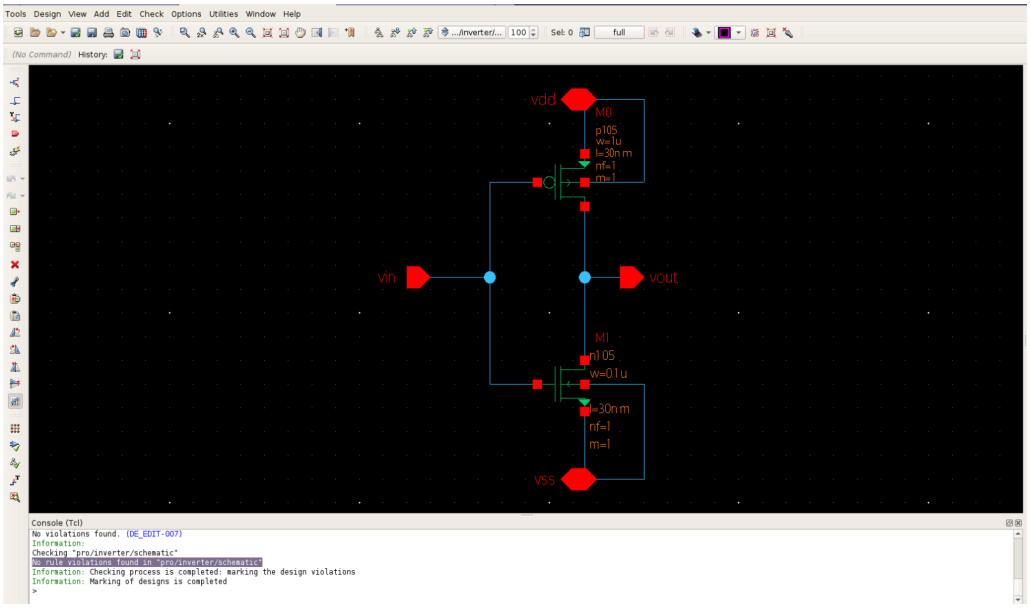

CMOS Inverter Schematic — Synopsys Custom Compiler

2. Symbol

A symbol was created in Custom Compiler to represent the inverter as a reusable block for use in higher-level schematics. The symbol exposes four ports: vin (input), vout (output), vdd (positive supply), and vss (ground). This allows the inverter to be instantiated cleanly in the testbench and in future hierarchical designs.

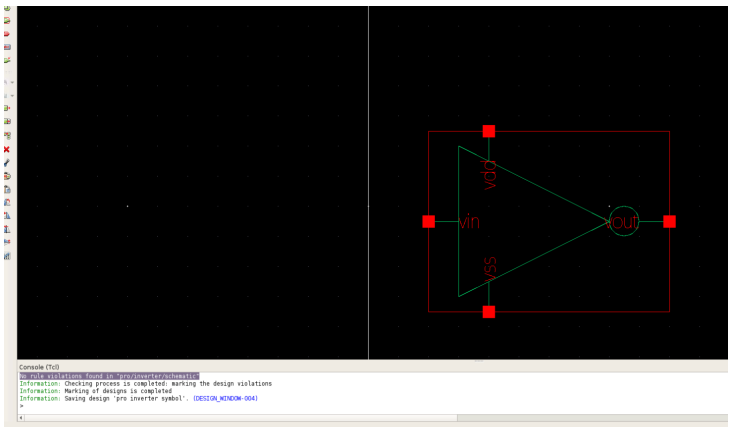

CMOS Inverter Symbol View — Synopsys Custom Compiler

3. Testbench

The testbench is constructed by instantiating the inverter symbol and providing the required input and supply sources. A pulse voltage source (vpulse) is connected to the input node (vin) to generate a periodic switching signal with parameters: $v1 = 0\,V$, $v2 = 1\,V$, pulse width $= 10\,ns$, and period $= 20\,ns$.

The power supply is provided using a DC voltage source (vdc) set to $1\,V$, connected to the VDD node, while the VSS node is tied to ground through a DC source set to $0\,V$.

A load capacitor of 10 fF is connected at the output node (vout) to model capacitive loading conditions. The output node is probed to observe the switching behavior and verify correct inverter operation during simulation.

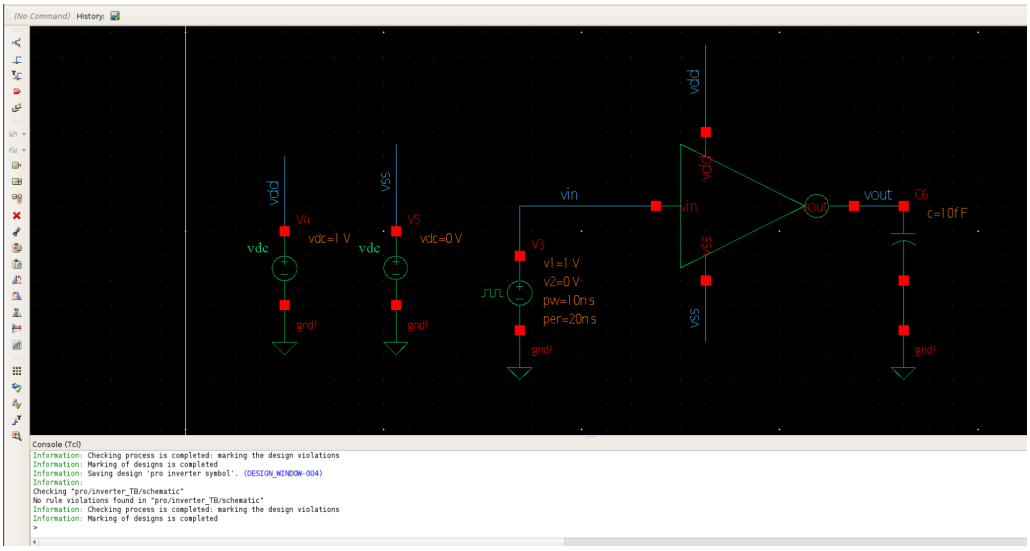

CMOS Inverter Testbench Schematic — Synopsys Custom Compiler

4. Simulation Setup

In PrimeWave, a transient analysis is configured with a stop time sufficient to capture multiple switching cycles. The SAED 32/28nm model files are loaded under the Typical-Typical (TT) corner. The output node vout is added to the probe list, and the netlist is generated from the testbench schematic before running.

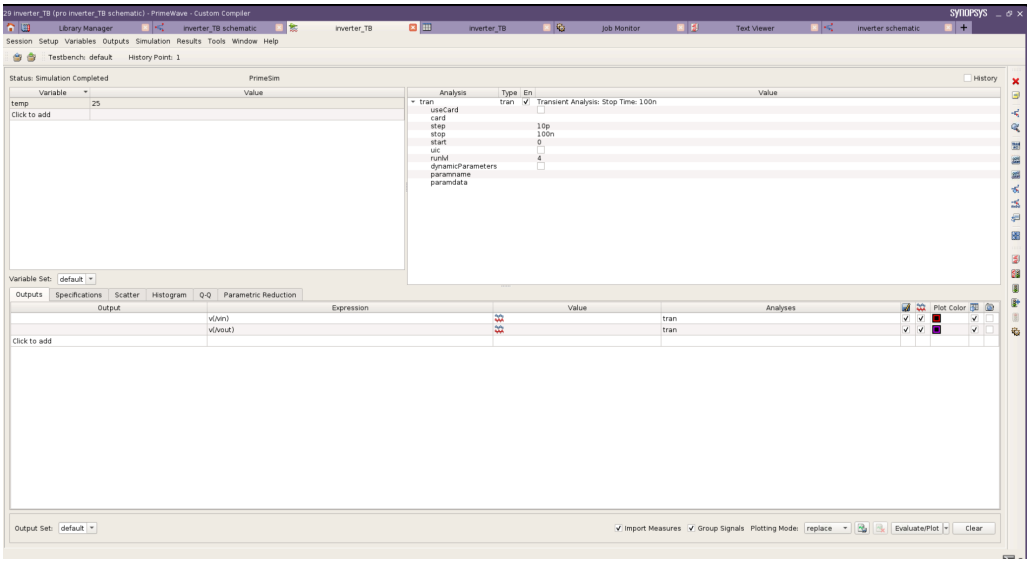

CMOS Inverter PrimeWave Simulation Setup

5. Netlist and Run

The netlist generated by PrimeWave is a SPICE-format text file that lists every component instance, its terminal connections, and its parameter values such as width (W) and length (L). It also includes the vpulse source definition and the transient analysis setup. Reviewing the netlist helps confirm that device parameters and connectivity are correct before simulation.

File Edit View Window Help

primesim.spi

```
*Sat Mar 21 07:07:01 2026

.global gnd!
*******************************************************************************
* Library          : pro
* Cell             : inverter
* View             : schematic
* View Search List : hspice hspiceD schematic spice veriloga
* View Stop List   : hspice hspiceD
*******************************************************************************
.subckt inverter vdd vin vout vss
xm0 vout vin vdd vdd p105 w=0.1u l=0.03u nf=1 m=1
xm1 vout vin vss vss n105 w=0.5u l=0.03u nf=1 m=1
.ends inverter

*******************************************************************************
* Library          : pro
* Cell             : inverter_TB
* View             : schematic
* View Search List : hspice hspiceD schematic spice veriloga
* View Stop List   : hspice hspiceD
*******************************************************************************
xi0 vdd vin vout vss inverter
v5 vss gnd! dc=0
v4 vdd gnd! dc=1
c6 vout gnd! c=10f
v3 vin gnd! dc=0 pulse ( 1 0 0 1p 1p 10n 20n )









.tran '10p' '100n' name=tran


.option primesim_probe_passive_device = 2
.probe v(*) level=1 prbport=0
.probe i(*) level=1
.probe tran v(vin) v(vout)
.temp 25




.option primesim_output=wdf


.option parhier = LOCAL
.option s_elem_cache_dir = "$SYNOPSYS_CUSTOM_USER/sparam_dir"
.option pva_output_dir = "$SYNOPSYS_CUSTOM_USER/pva_dir"
```

CMOS Inverter Netlist / Simulation Run — PrimeWave

6. Output Waveform

The output waveform shows that vout switches to logic low whenever vin is high, and rises to VDD whenever vin is low. This confirms correct inverter operation. The rise and fall times are approximately balanced due to proper PMOS-to-NMOS sizing.

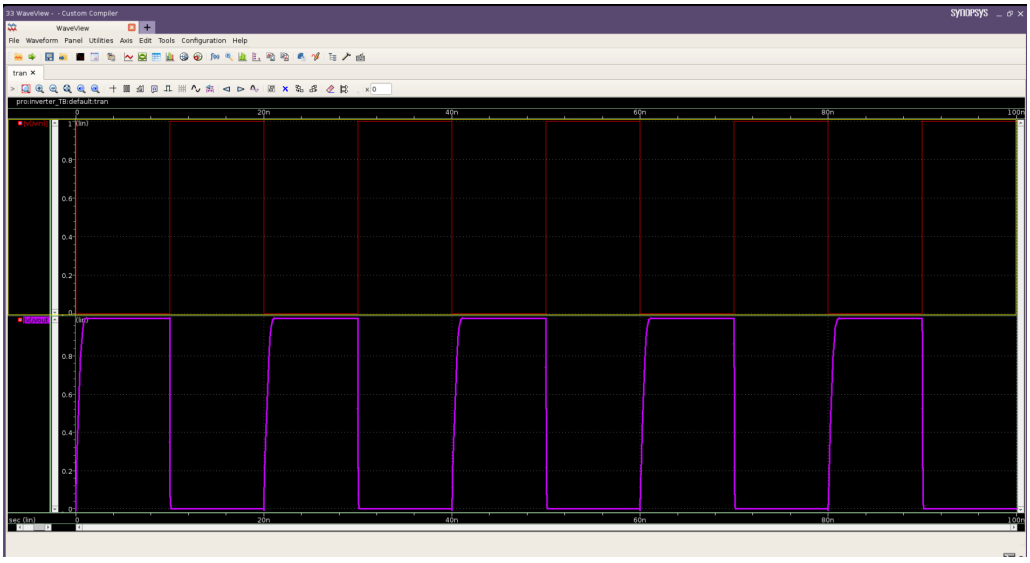

CMOS Inverter Output Waveform — PrimeWave Results

7. Verification

The inverter behavior is verified as:

$$vout = \overline{vin}$$

The output reaches full logic high and logic low levels with correct switching behavior across the applied input waveform.