LONGITUDINAL SECTION

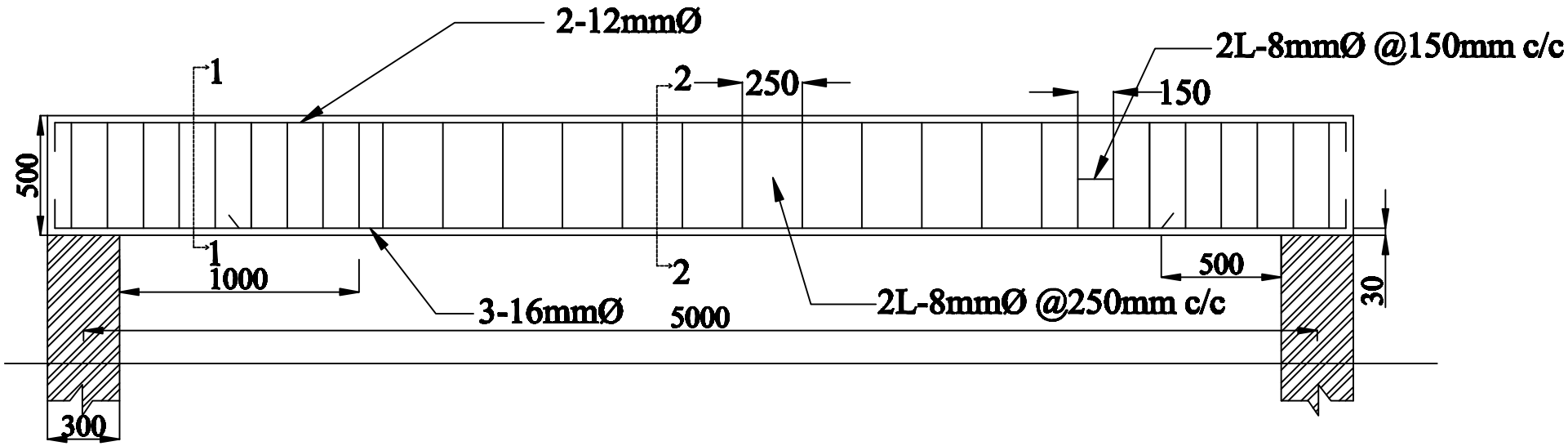

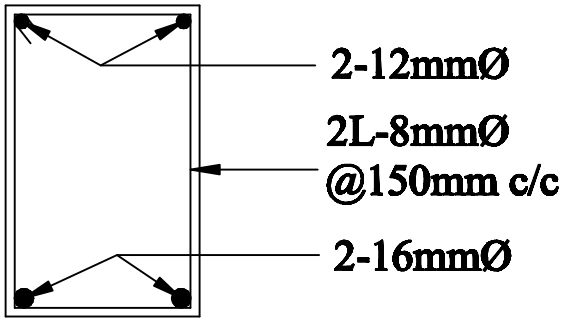

SECTION 1-1 AT SUPPORT

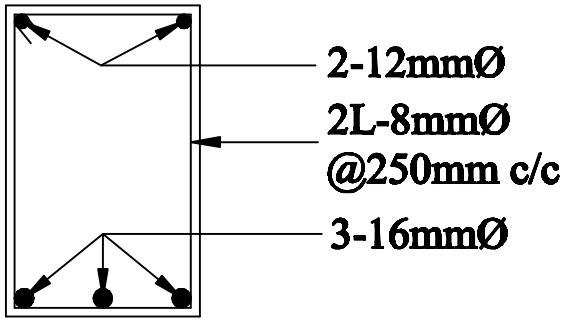

SECTION 2-2 AT MID SPAN

Q3: SIMPLY SUPPORTED BEAM

NOTE:

Beam Size	- 300mm X 500mm
Clear Cover	- 30mm
Span	- 5000mm
Wall Thickness	- 300mm
Concret	- M20 garde
Steel	- Fe415 Steel

All dimensions are in 'mm'

Drawn by : NANDISH U
USN : 1VK19CV403
Scale : 1:50