부품 리스트			
항목	수량	부품 번호	재질
1	1	Bottom	플라스틱
2	1	Top	플라스틱

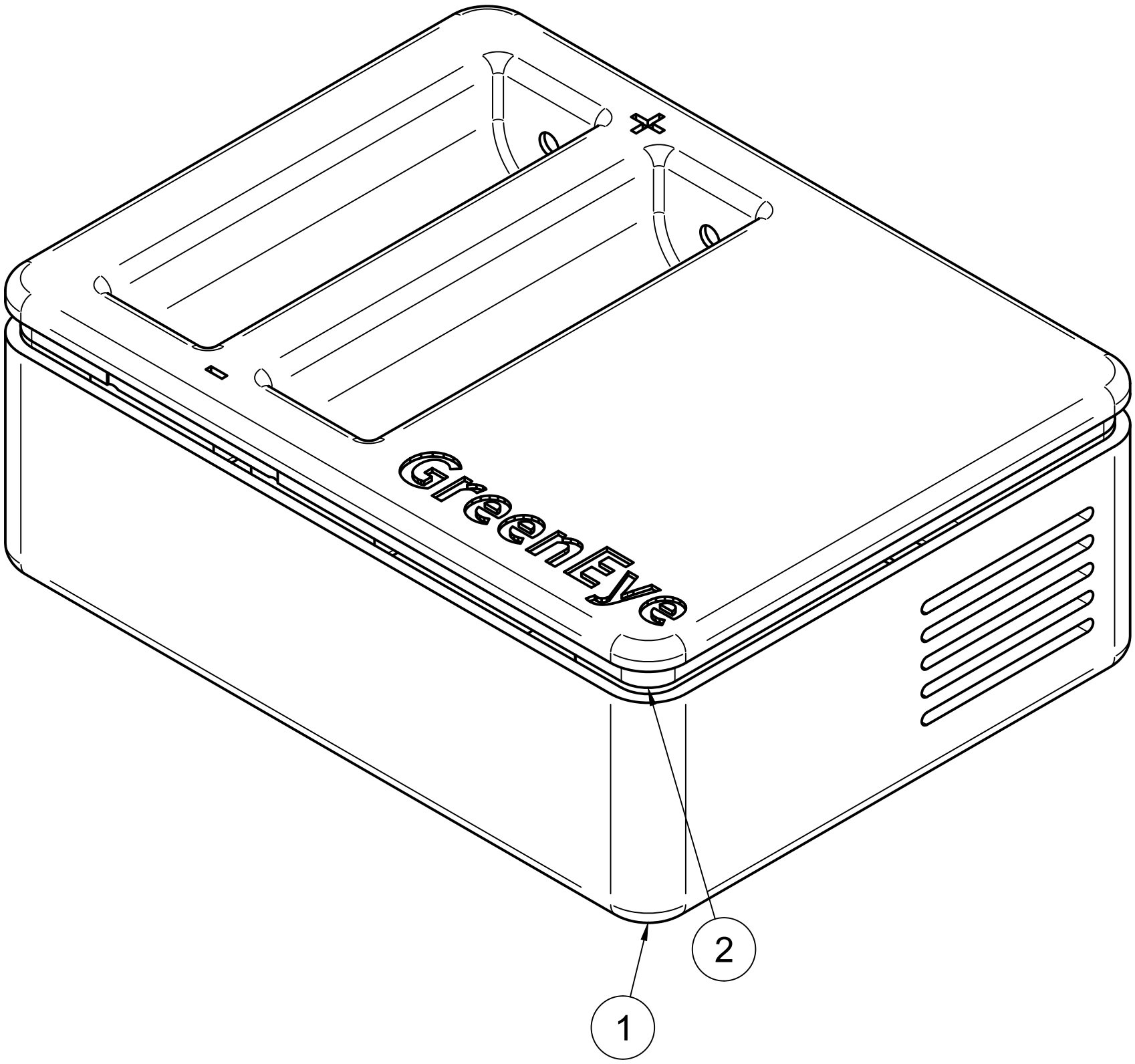

Dept.	Technical reference	Created by jihoonkimtech 2025-08-24	Approved by
		Document type	Document status
		Title Case_GreenEye_CCU	DWG No.
			Rev. / Date of issue / Sheet 1/4

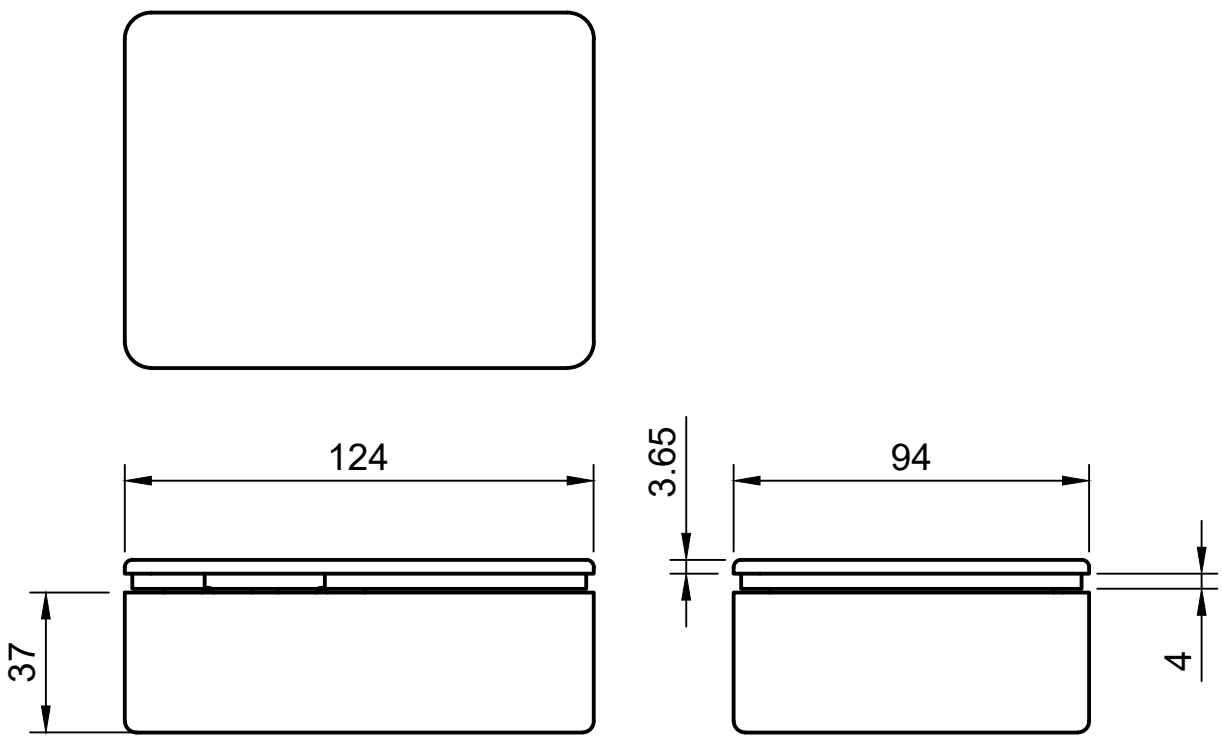

Dept.	Technical reference	Created by	Approved by
		jihoonkimtech 2025-08-24	
		Document type	Document status
		Title Case_GreenEye_CCU	DWG No.
			Rev. / Date of issue / Sheet 2/4

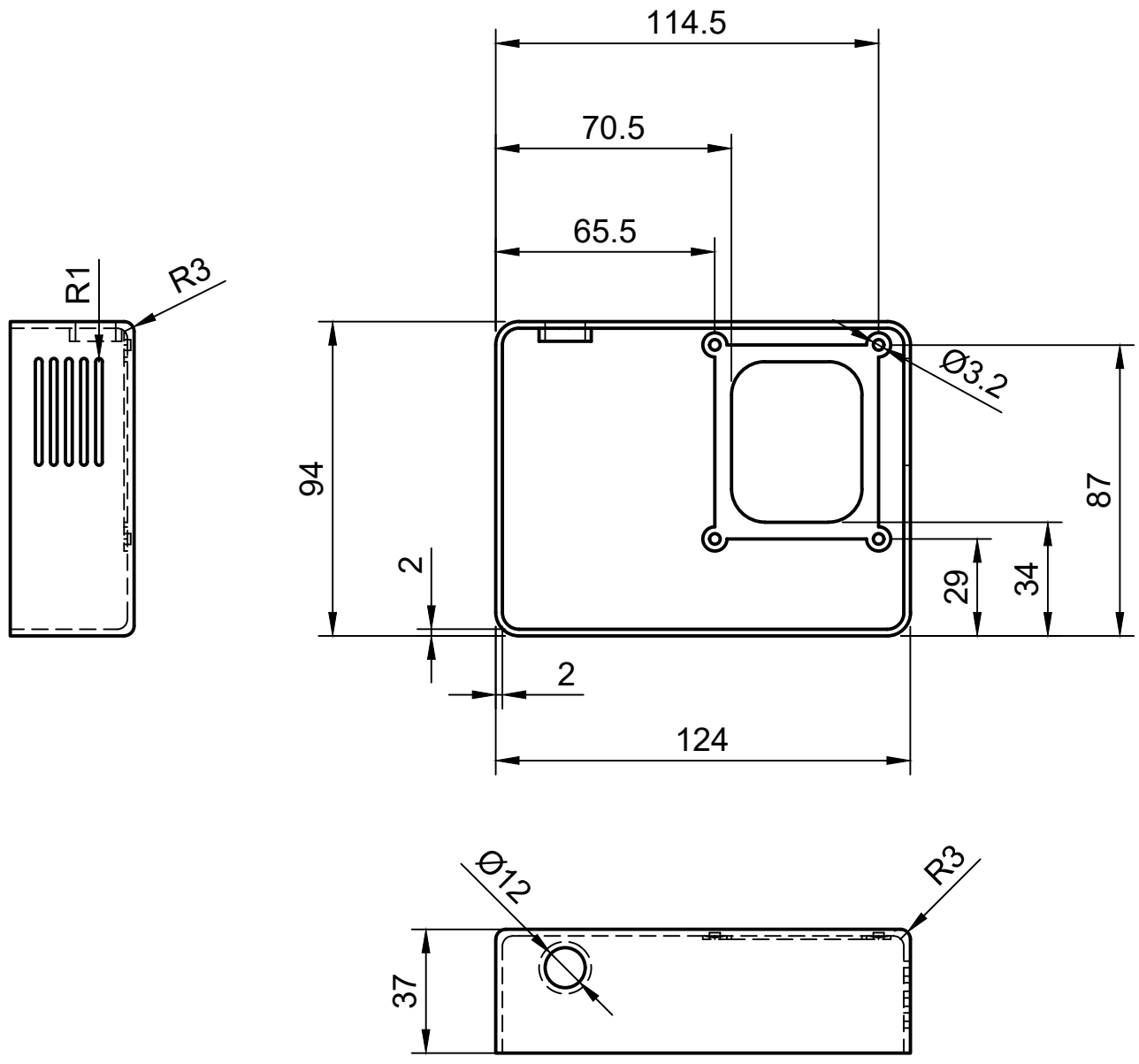

Dept.	Technical reference	Created by jihoonkimtech 2025-08-24	Approved by
		Document type	Document status
		Title Case_GreenEye_CCU Bottom	DWG No.
			Rev. / Date of issue / Sheet 3/4

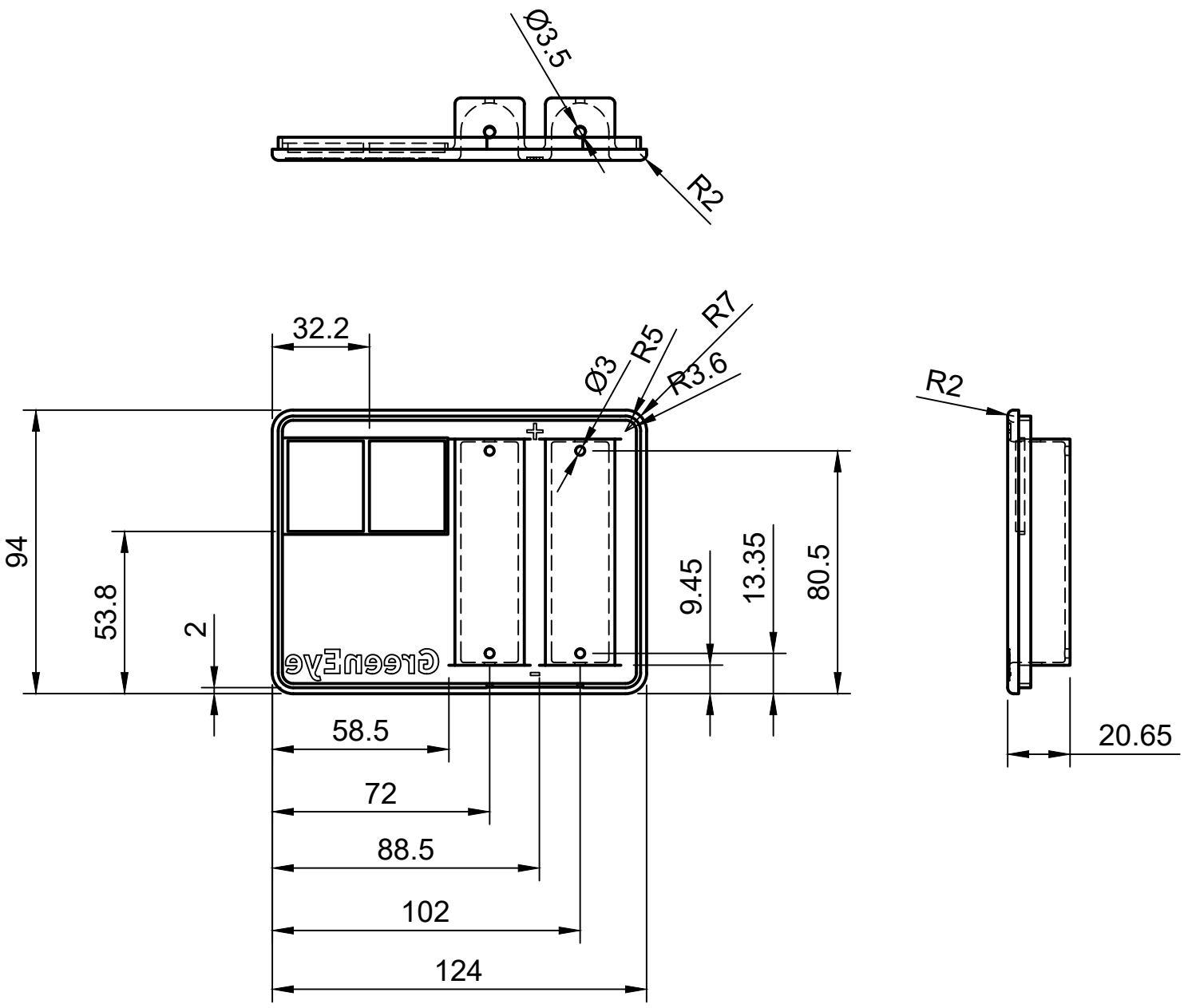

Dept.	Technical reference	Created by jihoonkimtech 2025-08-24	Approved by
		Document type	Document status
		Title Case_GreenEye_CCU Top	DWG No.
			Rev. / Date of issue / Sheet 4/4