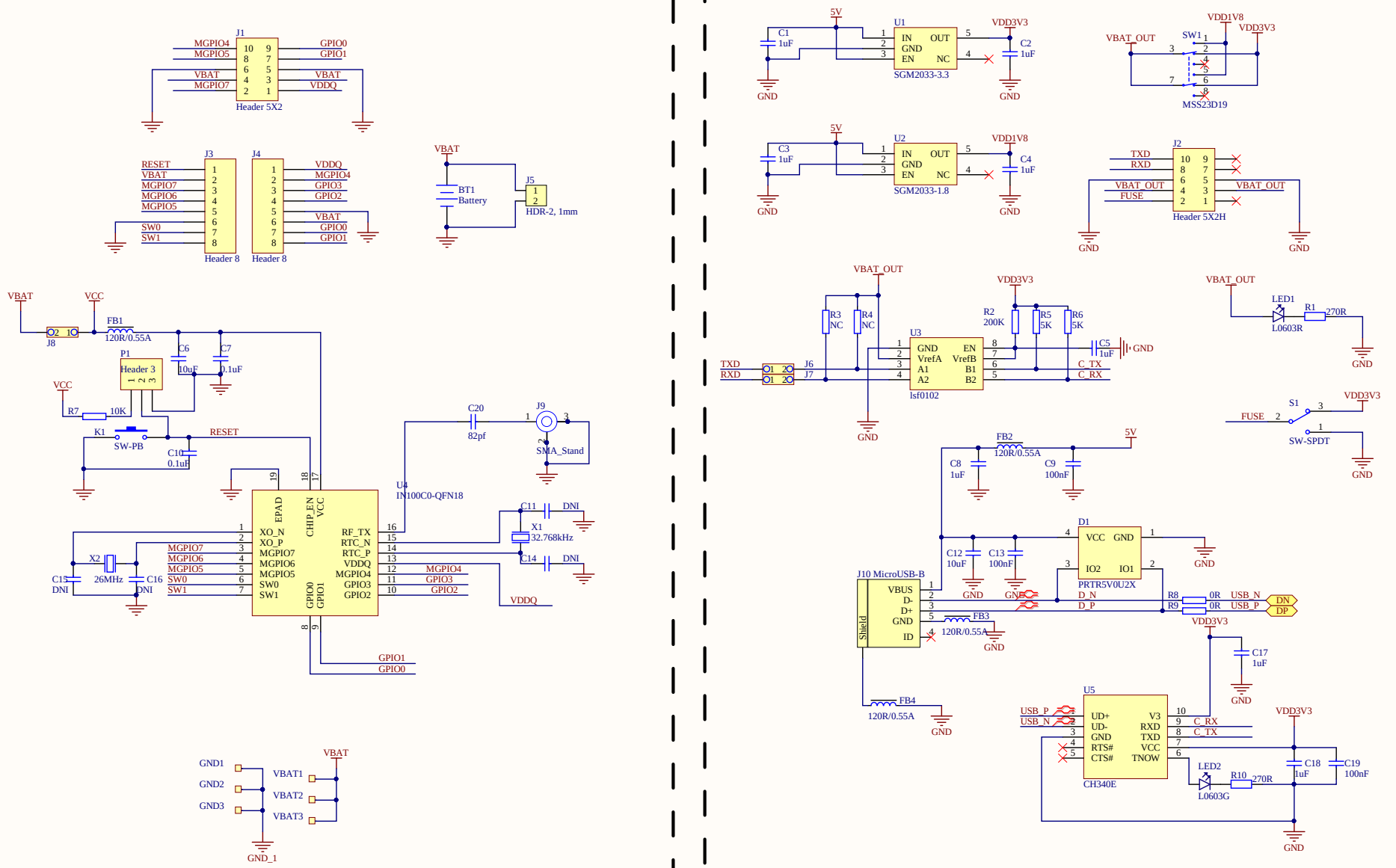

Title		
Size A3	Number	Revision
Date: 2022/7/7	Sheet of	
File: C:\pcb\..\IN100 DK.SchDoc	Drawn By:	