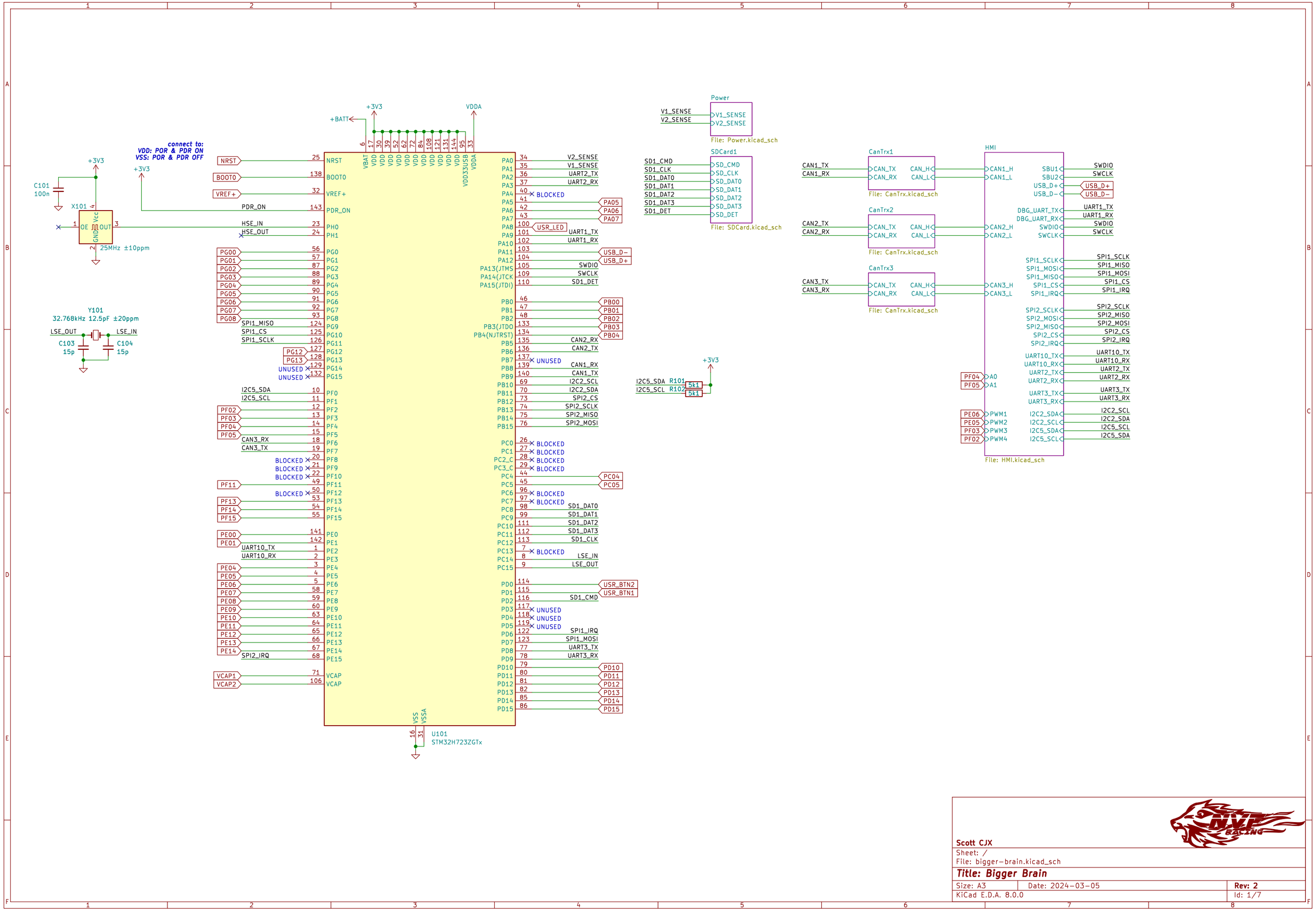

Scott CJX

Sheet: /

File: bigger-brain.kicad_sch

Title: Bigger Brain

Size: A3	Date: 2024-03-05	**Rev: 2**
KiCad E.D.A. 8.0.0		Id: 1/7

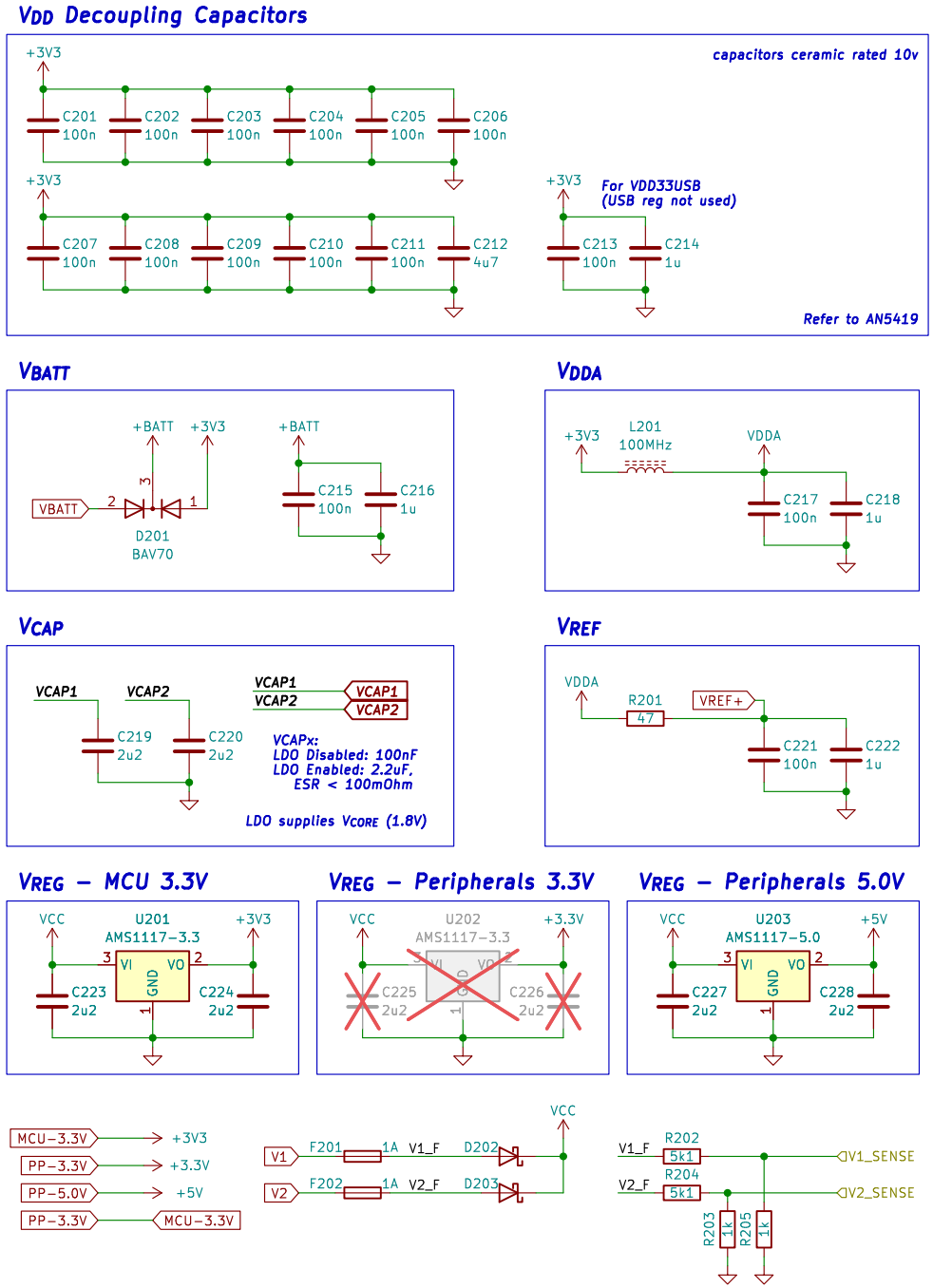

Scott CJX

Sheet: /Power/

File: Power.kicad_sch

Title: Bigger Brain

Size: A4	Date: 2024-03-05	Rev: 2
KiCad E.D.A. 8.0.0		Id: 2/7

SD Card

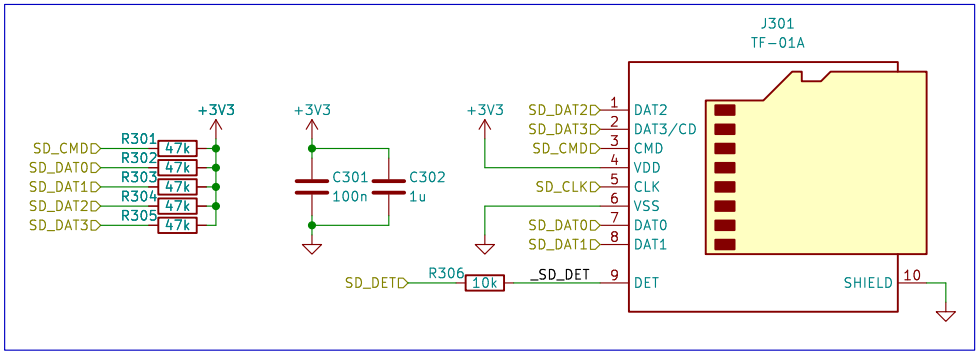

Scott CJX		
Sheet: /SDCard1/		
File: SDCard.kicad_sch		
Title: Bigger Brain		
Size: A4	Date: 2024-03-05	**Rev: 2**
KiCad E.D.A. 8.0.0		Id: 3/7

USB

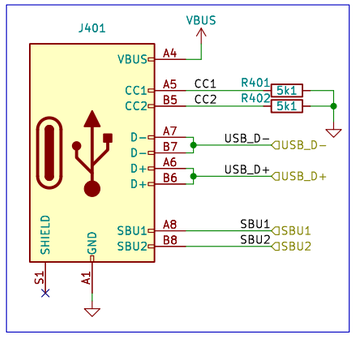

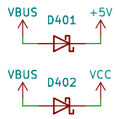

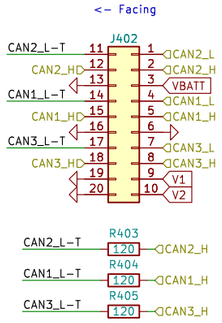

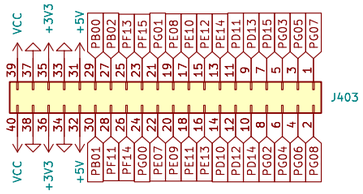

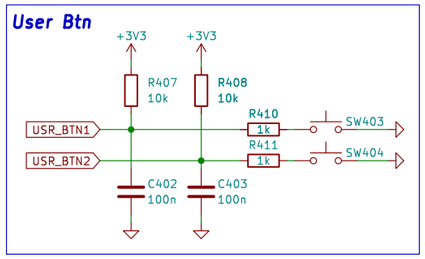

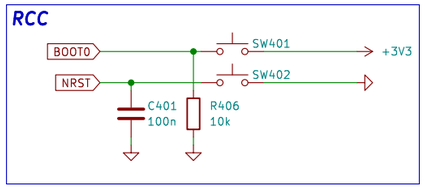

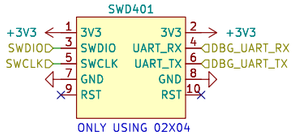

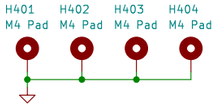

NOTE:
I2C2 has pull ups
I2C5 is without pull ups

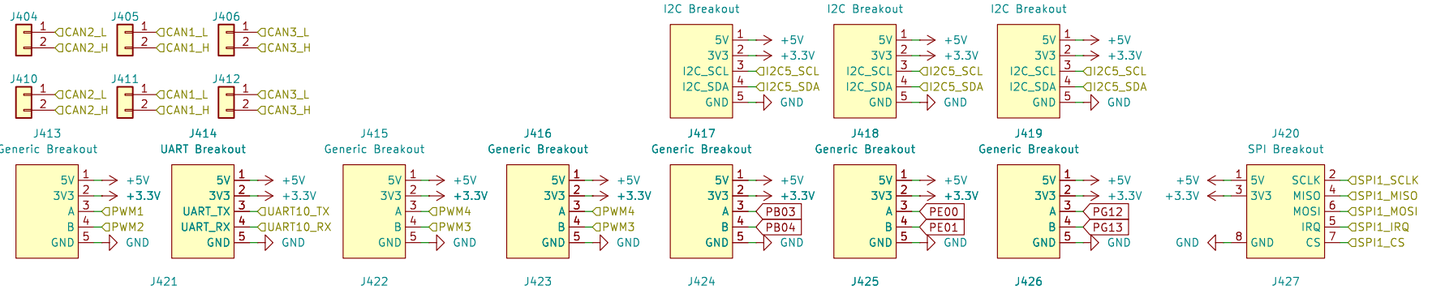

Ref: STM32 Pin Current MAX
MCU MAX $I_{IO(PIN)}$ = 25mA.

Assuming conditions:
LED: V_F: 2.5V, I_F: 4mA

Calculations for CLR:
3v3−2v5=0v8
V=IR: 0v8 = 0.04R
R = 200

Ref: CLR Calculator

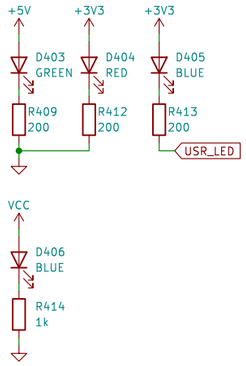

Scott CJX

Sheet: /HMI/
File: HMI.kicad_sch

Title: Bigger Brain

Size: A3	Date: 2024−03−05	**Rev: 2**
KiCad E.D.A. 8.0.0		Id: 4/7

CAN Transceiver

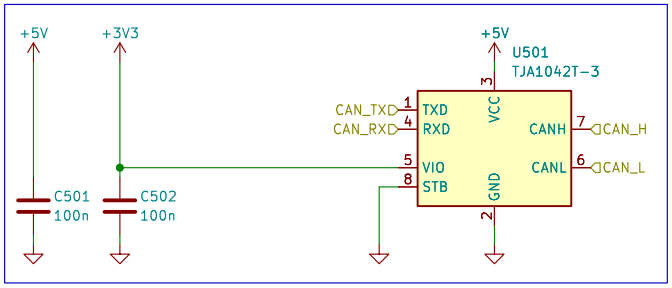

Scott CJX

Sheet: /CanTrx1/
File: CanTrx.kicad_sch

Title: Bigger Brain

Size: A4	Date: 2024-03-05	**Rev: 2**
KiCad E.D.A. 8.0.0		Id: 5/7

CAN Transceiver

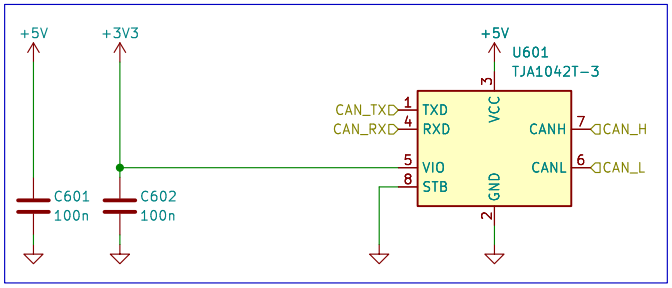

Scott CJX

Sheet: /CanTrx2/
File: CanTrx.kicad_sch

Title: Bigger Brain

Size: A4	Date: 2024-03-05	**Rev: 2**
KiCad E.D.A. 8.0.0		Id: 6/7

CAN Transceiver

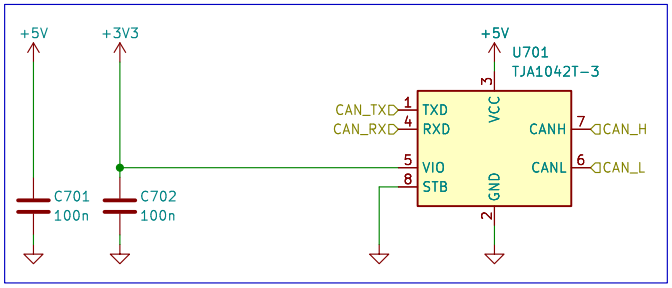

Scott CJX

Sheet: /CanTrx3/
File: CanTrx.kicad_sch

Title: Bigger Brain

Size: A4	Date: 2024-03-05	**Rev: 2**
KiCad E.D.A. 8.0.0		Id: 7/7