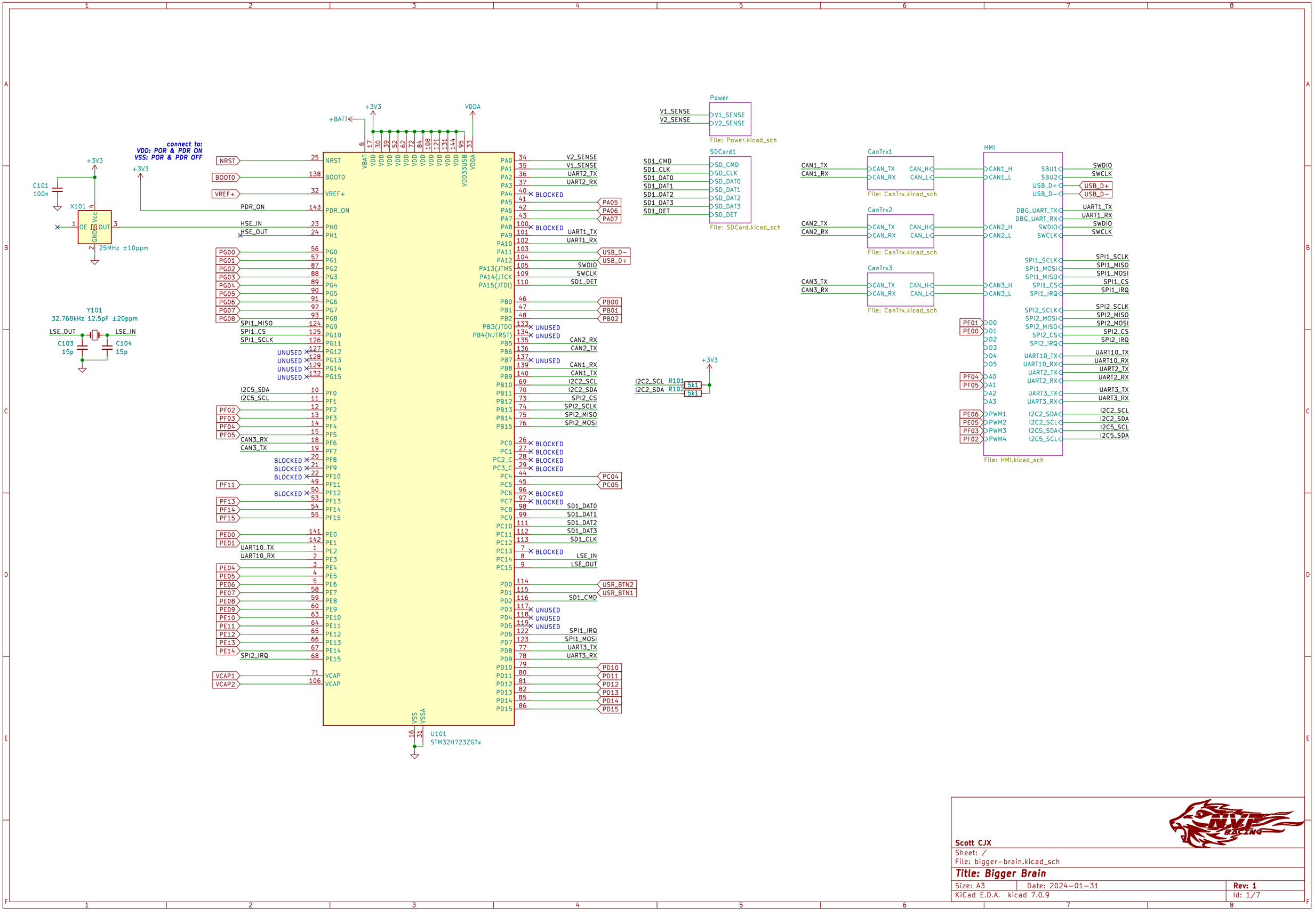
connect to:
VDD: POR & PDR ON
VSS: POR & PDR OFF
+3V3
+BATT
VDDA
C101
100n
X101
OE
Vcc
GND
OUT
25MHz ±10ppm
Y101
32.768kHz 12.5pF ±20ppm
LSE_OUT
LSE_IN
C103
15p
C104
15p
NRST
BOOT0
VREF+
PDR_ON
HSE_IN
HSE_OUT
PG00
PG01
PG02
PG03
PG04
PG05
PG06
PG07
PG08
SPI1_MISO
SPI1_CS
SPI1_SCLK
UNUSED
I2C5_SDA
I2C5_SCL
PF02
PF03
PF04
PF05
CAN3_RX
CAN3_TX
BLOCKED
PF11
PF13
PF14
PF15
PE00
PE01
UART10_TX
UART10_RX
PE04
PE05
PE06
PE07
PE08
PE09
PE10
PE11
PE12
PE13
PE14
SPI2_IRQ
VCAP1
VCAP2
U101
STM32H723ZGTx
Power
V1_SENSE
V2_SENSE
File: Power.kicad_sch
SDCard1
SD_CMD
SD_CLK
SD_DAT0
SD_DAT1
SD_DAT2
SD_DAT3
SD_DET
File: SDCard.kicad_sch
I2C2_SCL R101 5k1
I2C2_SDA R102 5k1
CanTrx1
CanTrx2
CanTrx3
CAN1_TX
CAN1_RX
CAN2_TX
CAN2_RX
CAN3_TX
CAN3_RX
CAN_TX
CAN_RX
CAN_H
CAN_L
File: CanTrx.kicad_sch
HMI
CAN1_H
CAN1_L
CAN2_H
CAN2_L
CAN3_H
CAN3_L
SBU1
SBU2
USB_D+
USB_D−
DBG_UART_TX
DBG_UART_RX
SWDIO
SWCLK
SPI1_SCLK
SPI1_MOSI
SPI1_MISO
SPI1_CS
SPI1_IRQ
SPI2_SCLK
SPI2_MISO
SPI2_MOSI
SPI2_CS
SPI2_IRQ
UART10_TX
UART10_RX
UART2_TX
UART2_RX
UART3_TX
UART3_RX
I2C2_SCL
I2C2_SDA
I2C5_SCL
I2C5_SDA
D0
D1
D2
D3
D4
D5
A0
A1
A2
A3
PWM1
PWM2
PWM3
PWM4
File: HMI.kicad_sch
Scott CJX
Sheet: /
File: bigger−brain.kicad_sch
Title: Bigger Brain
Size: A3
Date: 2024−01−31
Rev: 1
KiCad E.D.A. kicad 7.0.9
Id: 1/7

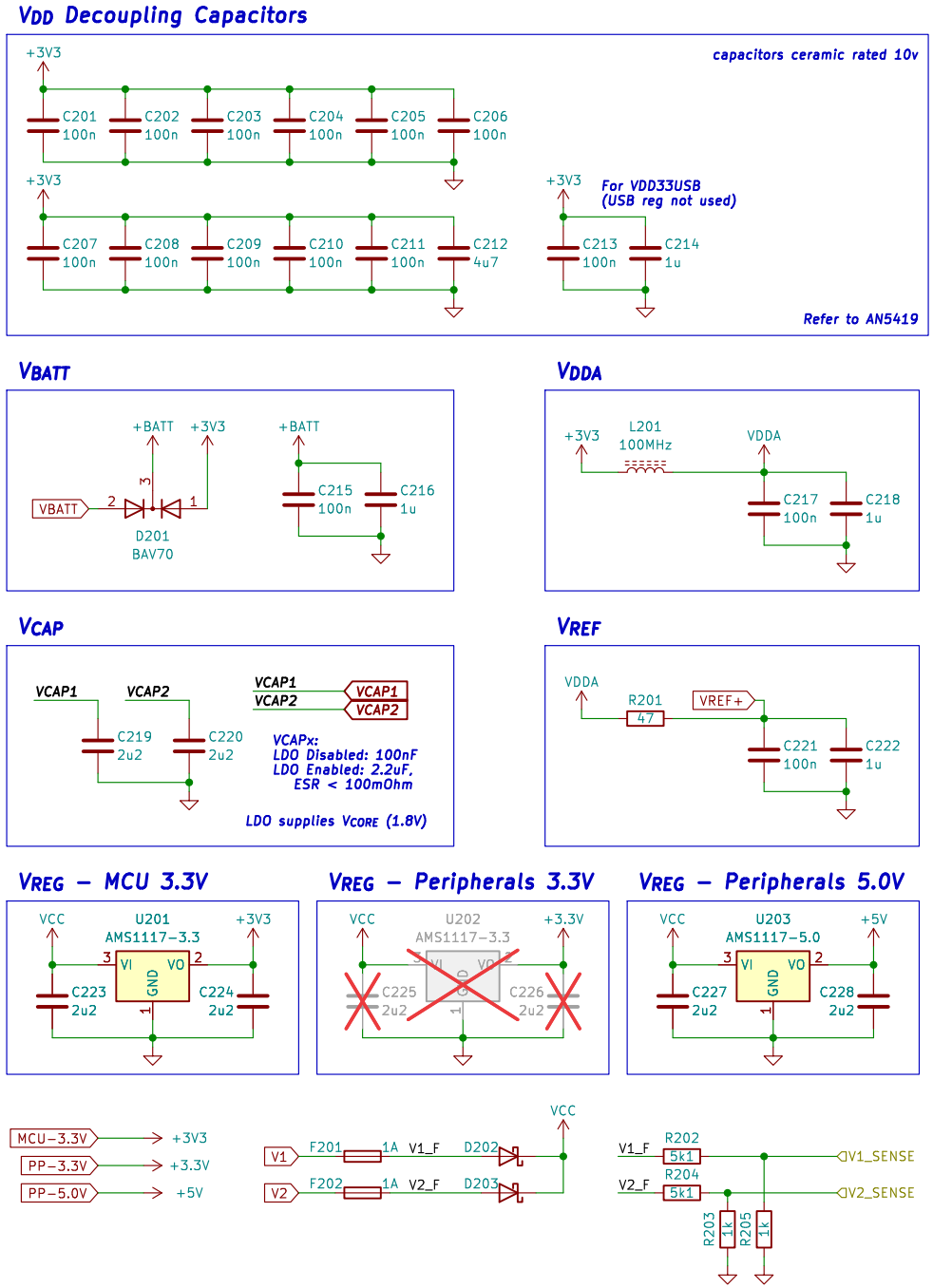

Scott CJX

Sheet: /Power/

File: Power.kicad_sch

Title: Bigger Brain

Size: A4	Date: 2024-01-31	Rev: 1
KiCad E.D.A. kicad 7.0.9		Id: 2/7

SD Card

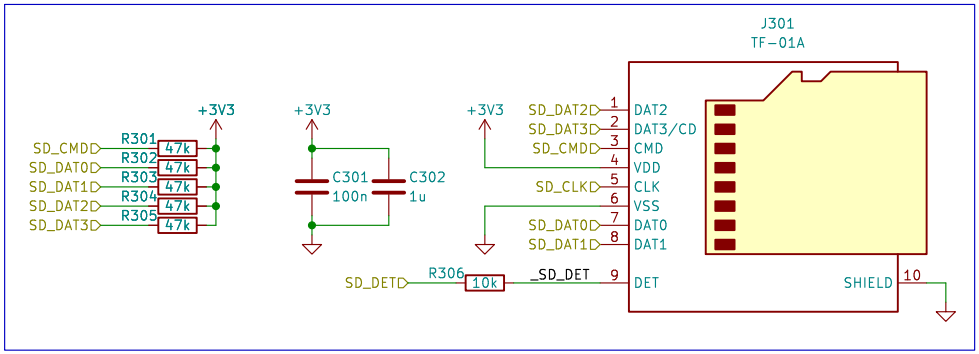

Scott CJX		
Sheet: /SDCard1/		
File: SDCard.kicad_sch		
Title: Bigger Brain		
Size: A4	Date: 2024-01-31	**Rev: 1**
KiCad E.D.A. kicad 7.0.9		Id: 3/7

USB

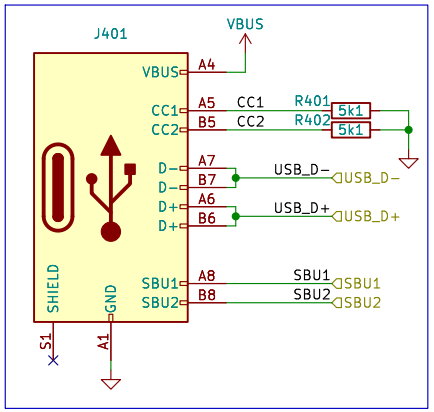

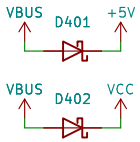

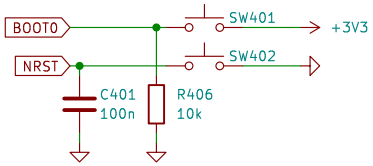

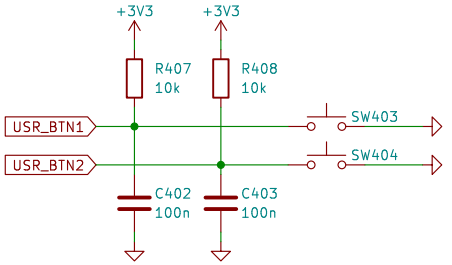

NOTE:
I2C2 has pull ups
I2C5 is without pull ups

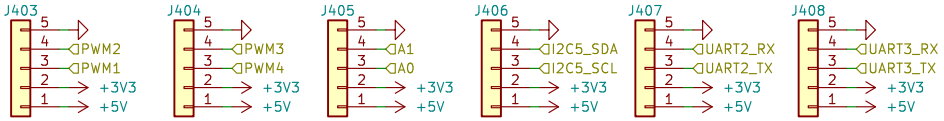

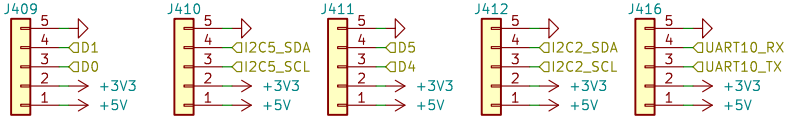

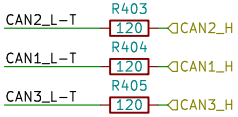

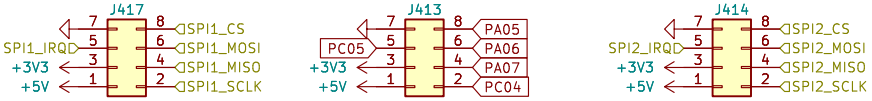

<- Facing

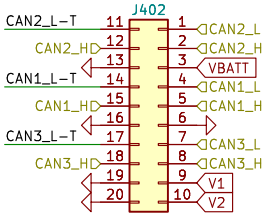

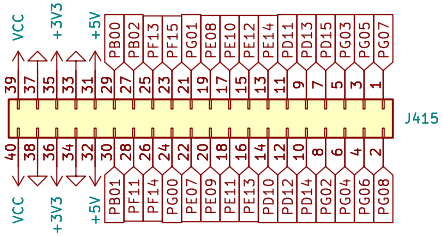

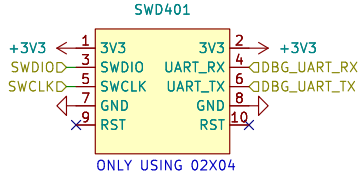

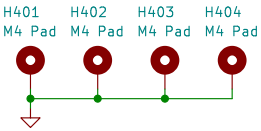

Scott CJX
Sheet: /HMI/
File: HMI.kicad_sch

Title: Bigger Brain

Size: A4	Date: 2024-01-31	**Rev: 1**
KiCad E.D.A. kicad 7.0.9		Id: 4/7

CAN Transceiver

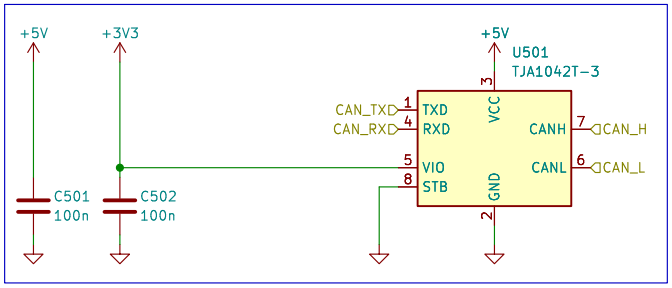

Scott CJX

Sheet: /CanTrx1/
File: CanTrx.kicad_sch

Title: Bigger Brain

Size: A4	Date: 2024-01-31	**Rev: 1**
KiCad E.D.A. kicad 7.0.9		Id: 5/7

CAN Transceiver

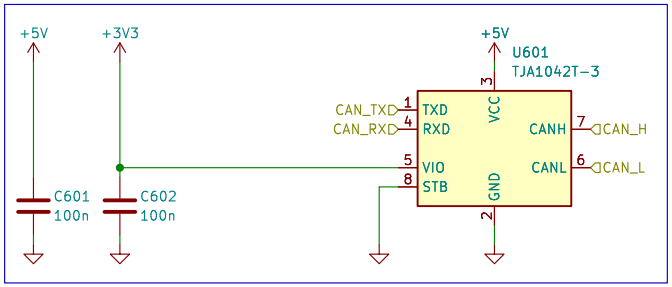

Scott CJX

Sheet: /CanTrx2/
File: CanTrx.kicad_sch

Title: Bigger Brain

Size: A4	Date: 2024-01-31	**Rev: 1**
KiCad E.D.A. kicad 7.0.9		Id: 6/7

CAN Transceiver

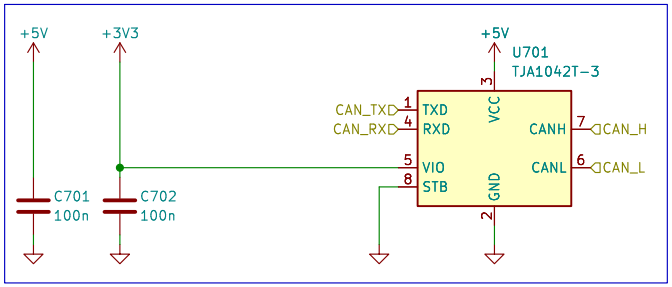

Scott CJX

Sheet: /CanTrx3/
File: CanTrx.kicad_sch

Title: Bigger Brain

Size: A4	Date: 2024-01-31	**Rev: 1**
KiCad E.D.A. kicad 7.0.9		Id: 7/7