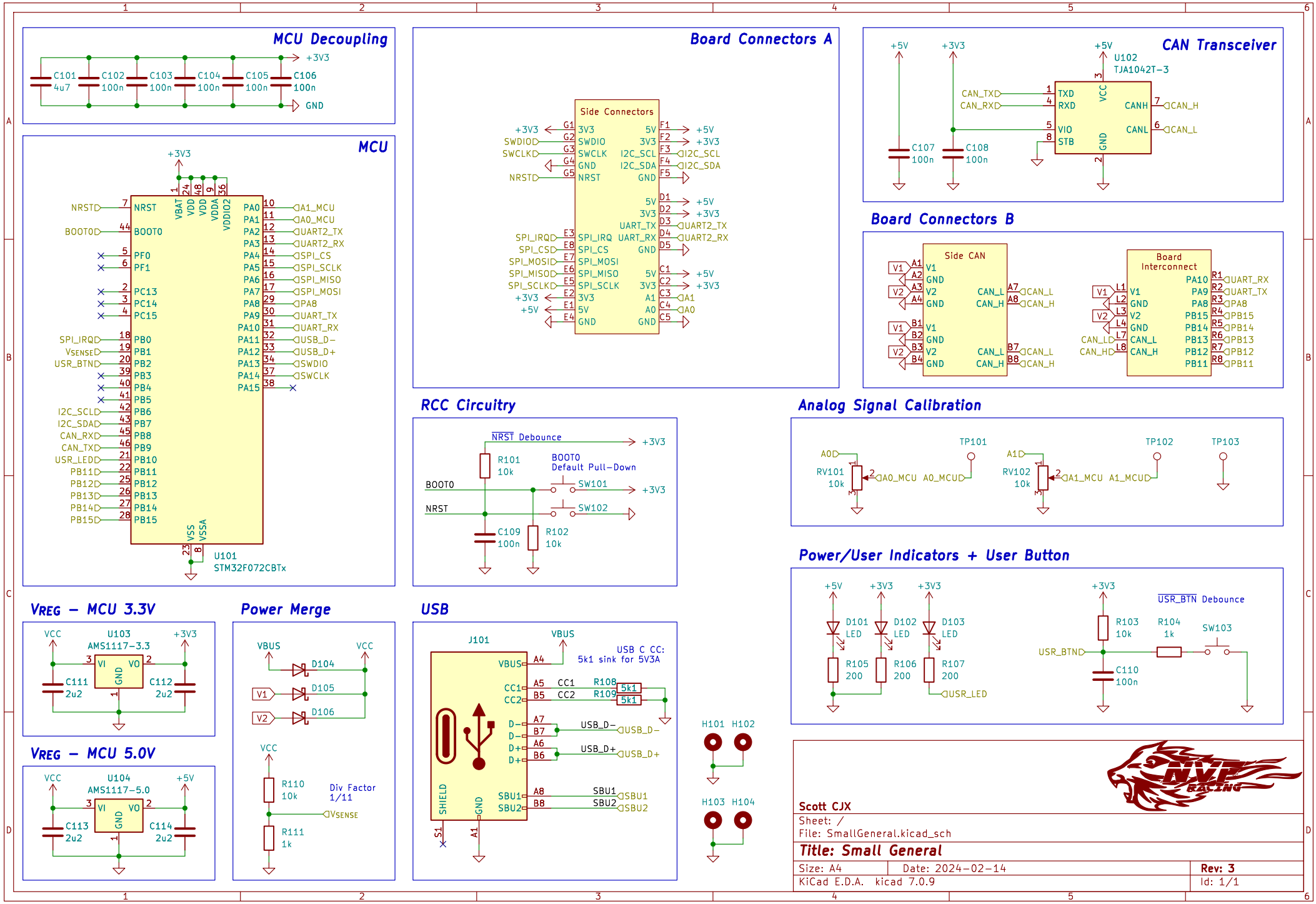
MCU Decoupling
+3V3
C101 4u7
C102 100n
C103 100n
C104 100n
C105 100n
C106 100n
GND
MCU
U101
STM32F072CBTx
Board Connectors A
Side Connectors
CAN Transceiver
U102
TJA1042T-3
C107 100n
C108 100n
Board Connectors B
Side CAN
Board Interconnect
RCC Circuitry
NRST Debounce
BOOT0
Default Pull-Down
R101 10k
R102 10k
C109 100n
SW101
SW102
Analog Signal Calibration
TP101
TP102
TP103
RV101 10k
RV102 10k
Power/User Indicators + User Button
D101 LED
D102 LED
D103 LED
R105 200
R106 200
R107 200
USR_LED
R103 10k
R104 1k
SW103
USR_BTN Debounce
C110 100n
VREG – MCU 3.3V
U103
AMS1117-3.3
C111 2u2
C112 2u2
VREG – MCU 5.0V
U104
AMS1117-5.0
C113 2u2
C114 2u2
Power Merge
D104
D105
D106
R110 10k
R111 1k
Div Factor 1/11
USB
J101
USB C CC: 5k1 sink for 5V3A
R108 5k1
R109 5k1
H101 H102
H103 H104
Scott CJX
Sheet: /
File: SmallGeneral.kicad_sch
Title: Small General
Size: A4
Date: 2024-02-14
Rev: 3
KiCad E.D.A. kicad 7.0.9
Id: 1/1