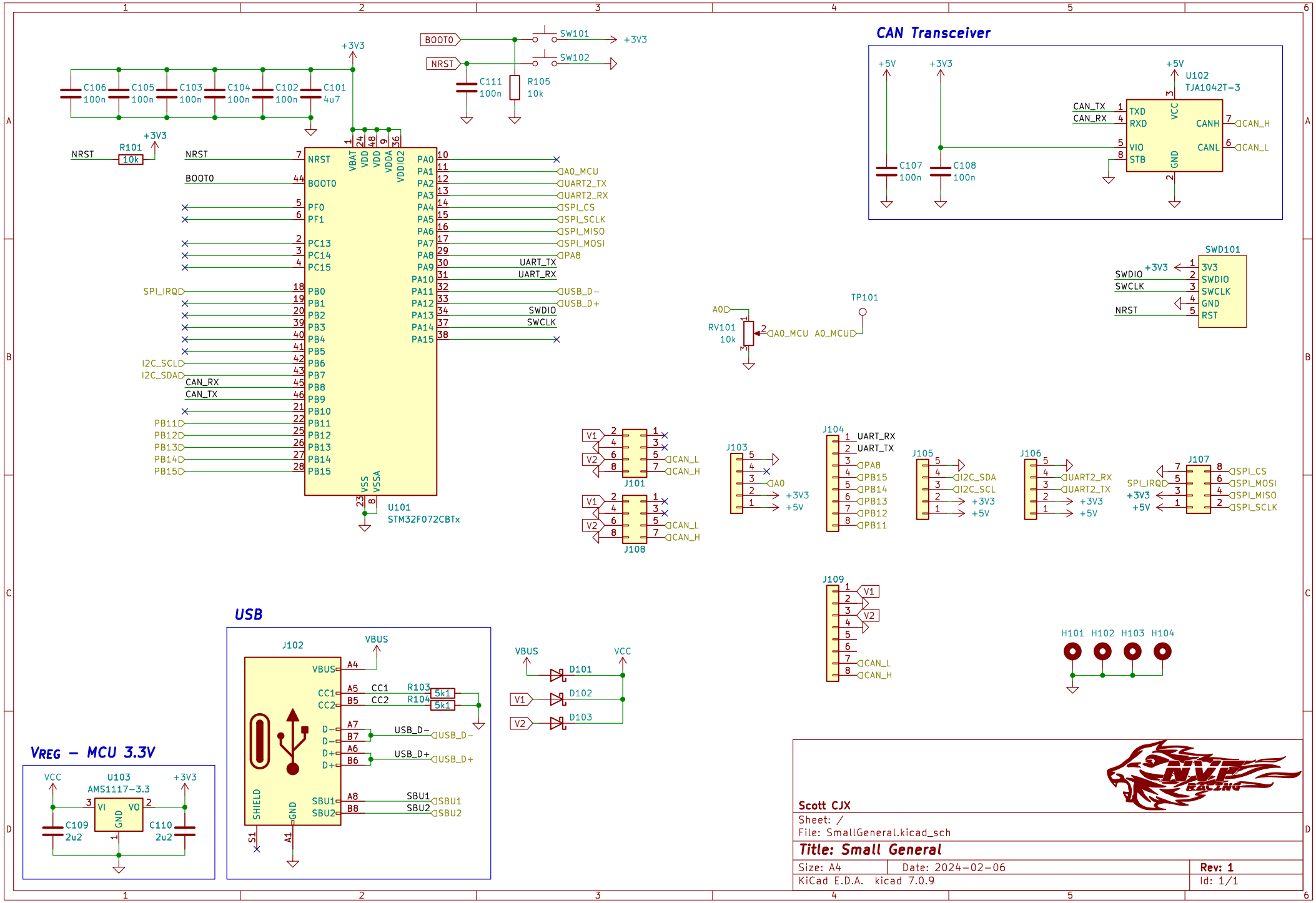
CAN Transceiver
U102
TJA1042T-3
U101
STM32F072CBTx
USB
J102
VREG – MCU 3.3V
U103
AMS1117-3.3
SW101
SW102
SWD101
TP101
J101
J108
J103
J104
J105
J106
J107
J109
H101 H102 H103 H104
D101
D102
D103
Scott CJX
Sheet: /
File: SmallGeneral.kicad_sch
Title: Small General
Size: A4
Date: 2024-02-06
Rev: 1
KiCad E.D.A. kicad 7.0.9
Id: 1/1