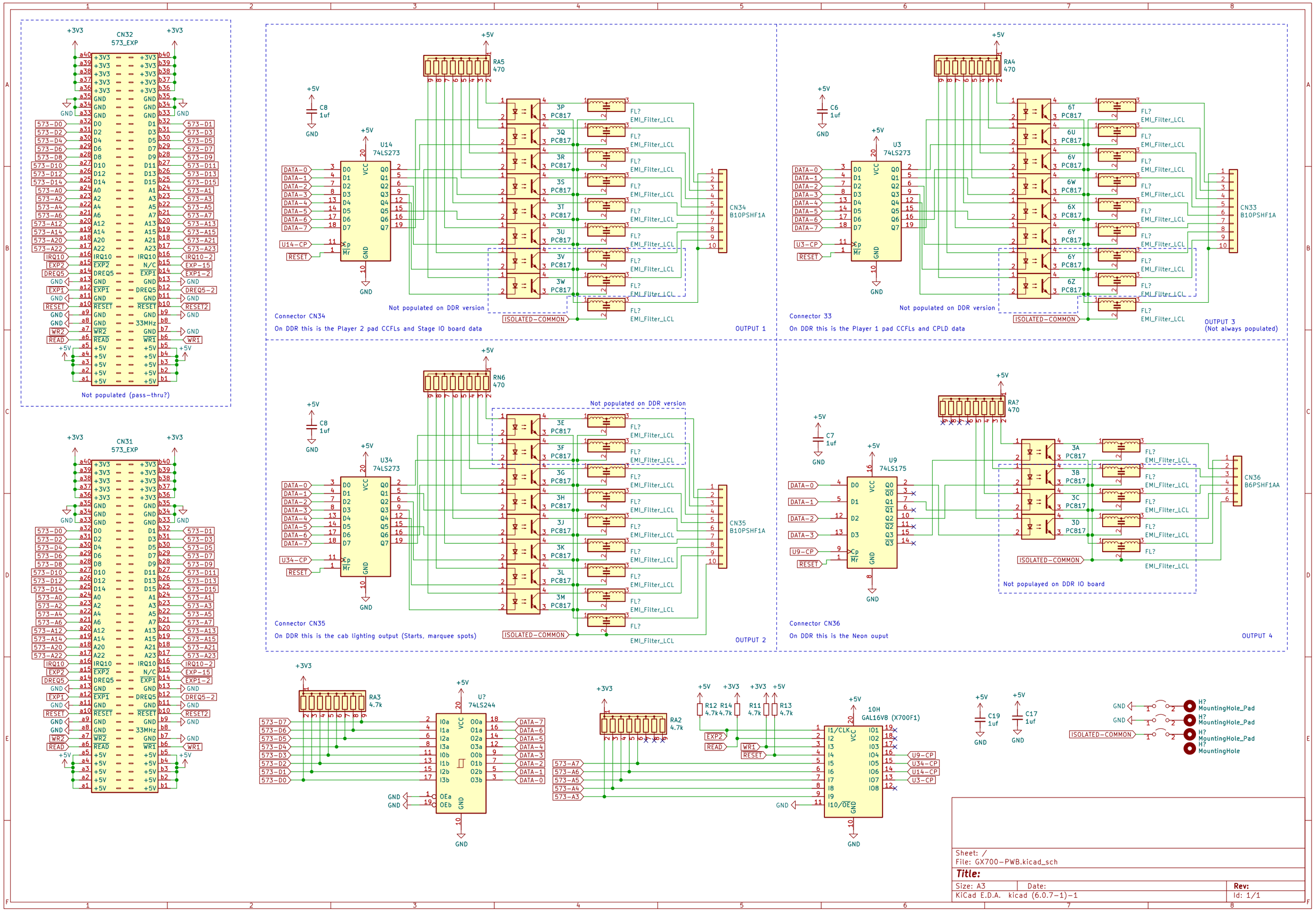
CN32
573_EXP
Not populated (pass-thru?)
CN31
573_EXP
RA5
470
U14
74LS273
CN34
B10PSHF1A
Connector CN34
On DDR this is the Player 2 pad CCFLs and Stage IO board data
Not populated on DDR version
OUTPUT 1
RA4
470
U3
74LS273
CN33
B10PSHF1A
Connector 33
On DDR this is the Player 1 pad CCFLs and CPLD data
OUTPUT 3
(Not always populated)
RN6
470
U34
74LS273
CN35
B10PSHF1A
Connector CN35
On DDR this is the cab lighting output (Starts, marquee spots)
OUTPUT 2
RA?
470
U9
74LS175
CN36
B6PSHF1AA
Not populayed on DDR IO board
Connector CN36
On DDR this is the Neon ouput
OUTPUT 4
RA3
4.7k
U?
74LS244
RA2
4.7k
10H
GAL16V8 (X700F1)
H?
MountingHole_Pad
H?
MountingHole
Sheet: /
File: GX700-PWB.kicad_sch
Title:
Size: A3
Date:
Rev:
KiCad E.D.A. kicad (6.0.7-1)-1
Id: 1/1