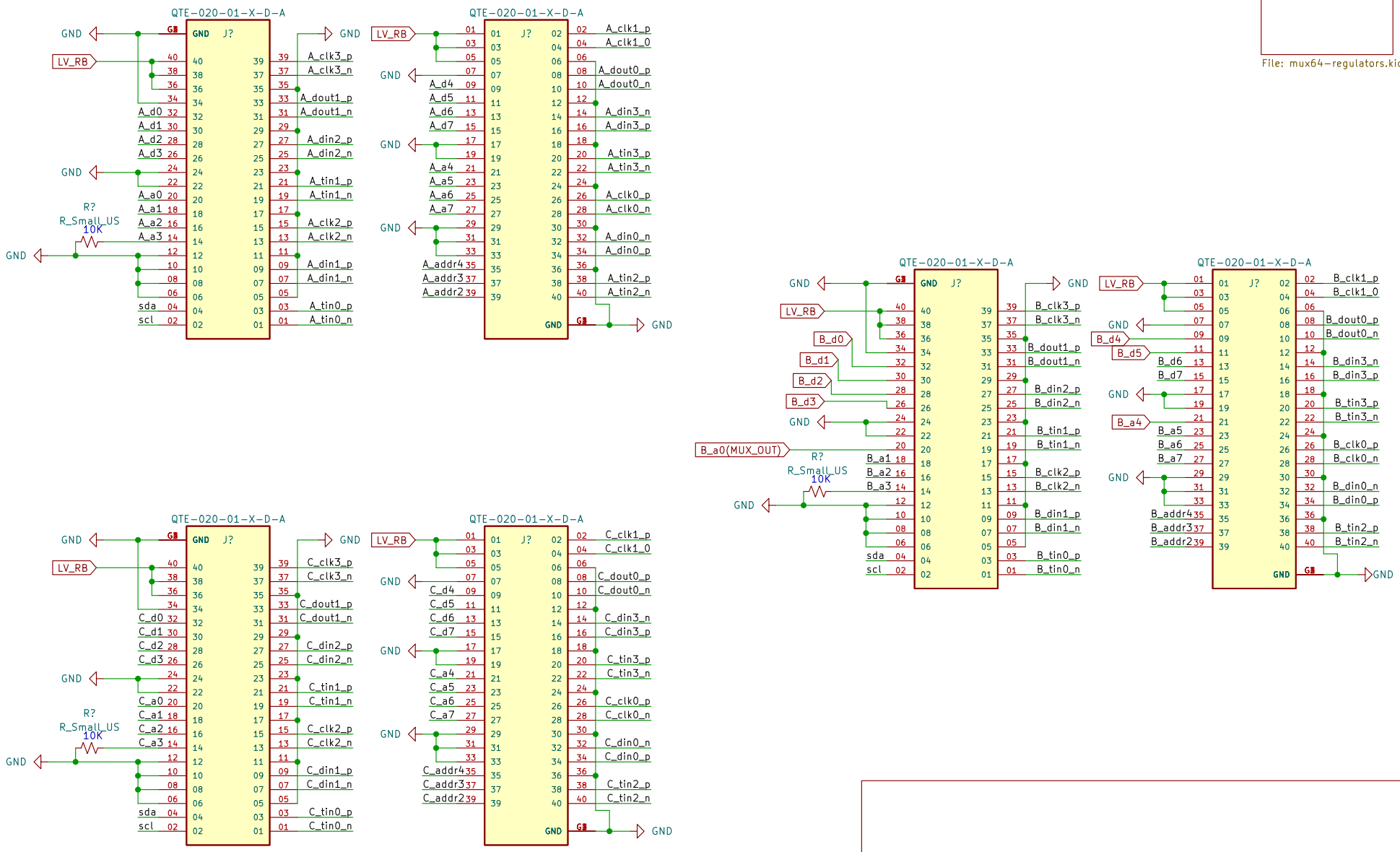

Sheet: /
File: Mux64.kicad_sch

Title:

Size: A4	Date:	**Rev:**
KiCad E.D.A. kicad (6.0.11-0)		Id: 1/3

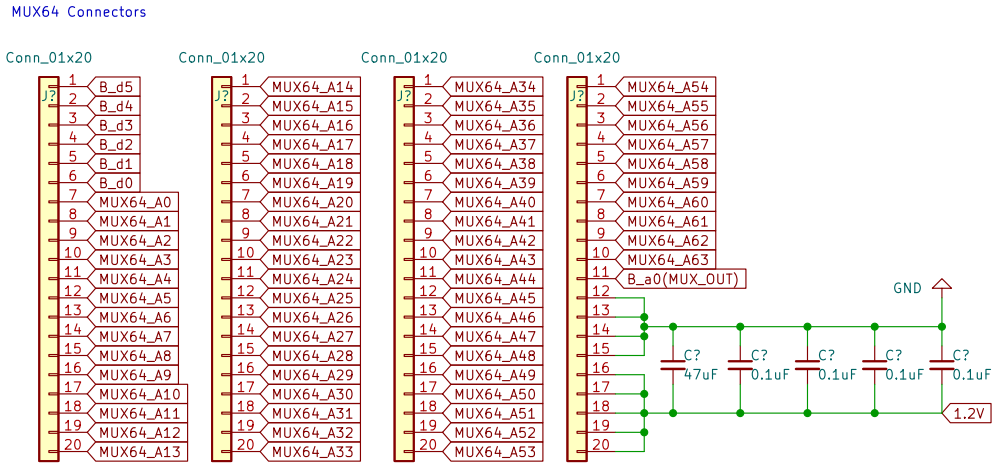

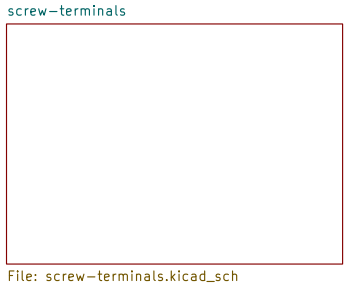

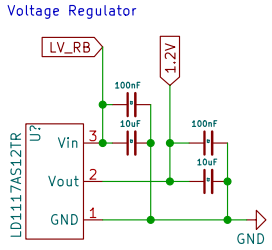

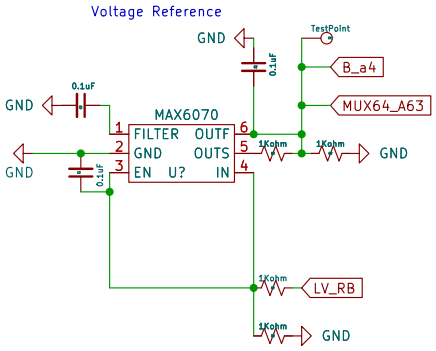

Sheet: /mux64-regulators/
File: mux64-regulators.kicad_sch

Title:

Size: A4	Date:	**Rev:**
KiCad E.D.A. kicad (6.0.11-0)		Id: 2/3

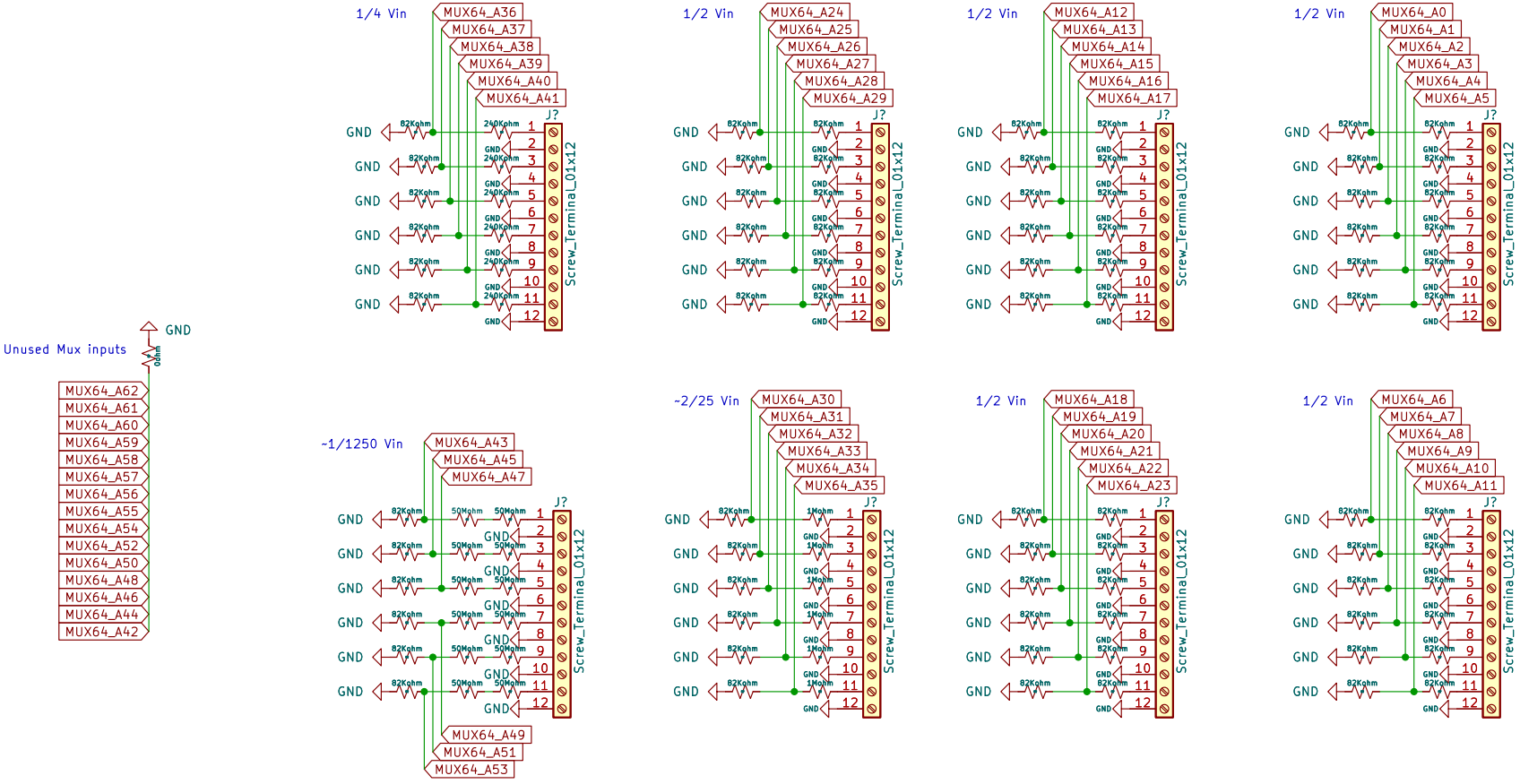

Sheet: /mux64-regulators/screw-terminals/
File: screw-terminals.kicad_sch

Title:

Size: A4	Date:	**Rev:**
KiCad E.D.A. kicad (6.0.11-0)		Id: 3/3