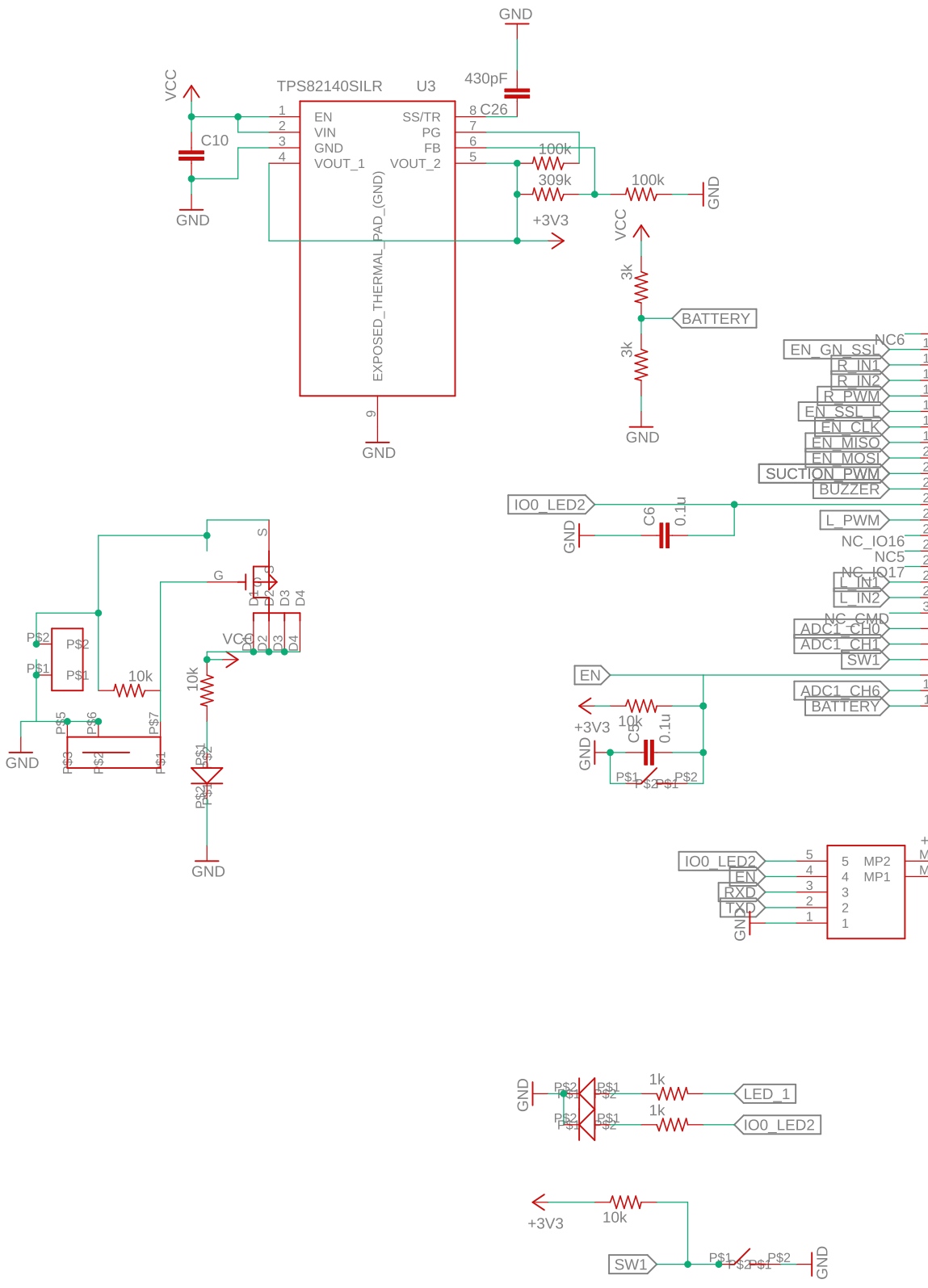
TPS82140SILR
U3
EN
VIN
GND
VOUT_1
SS/TR
PG
FB
VOUT_2
EXPOSED_THERMAL_PAD_(GND)
VCC
C10
GND
430pF
C26
100k
309k
+3V3
3k
BATTERY
EN_GN_SSL
R_IN1
R_IN2
R_PWM
EN_SSL_L
EN_CLK
EN_MISO
EN_MOSI
SUCTION_PWM
BUZZER
IO0_LED2
C6
0.1u
L_PWM
NC_IO16
NC5
NC_IO17
L_IN1
L_IN2
NC_CMD
ADC1_CH0
ADC1_CH1
SW1
ADC1_CH6
EN
C5
10k
MP2
MP1
RXD
TXD
LED_1
1k
10k
VCC
P$1
P$2

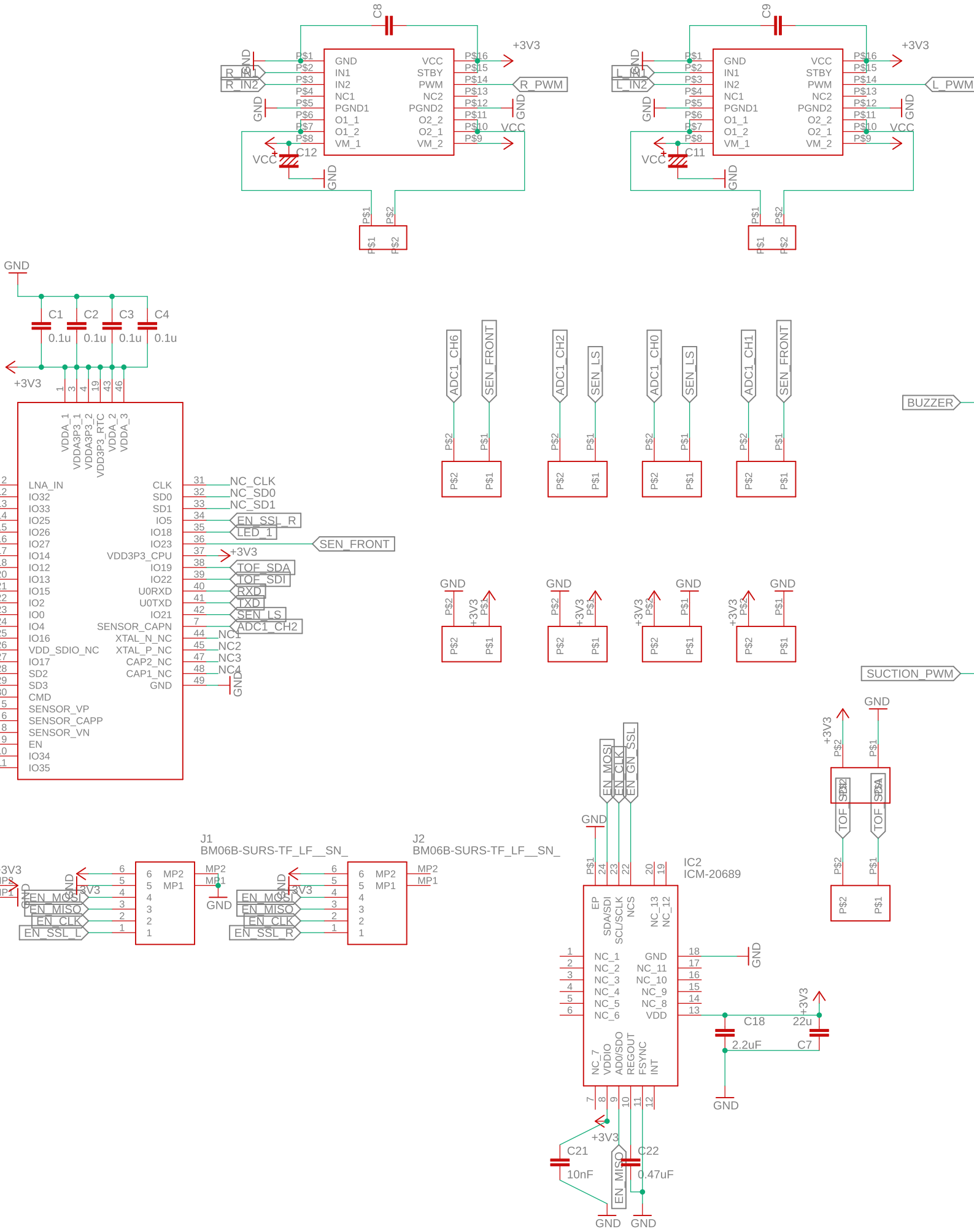
C8
C9
+3V3
GND
VCC
R_IN1
R_IN2
L_IN1
L_IN2
R_PWM
L_PWM
C12
C11
GND
IN1
IN2
NC1
PGND1
O1_1
O1_2
VM_1
STBY
PWM
NC2
PGND2
O2_2
O2_1
VM_2
C1
C2
C3
C4
0.1u
VDDA_1
VDDA3P3_1
VDDA3P3_2
VDD3P3_RTC
VDDA_2
VDDA_3
LNA_IN
IO32
IO33
IO25
IO26
IO27
IO14
IO12
IO13
IO15
IO2
IO0
IO4
IO16
VDD_SDIO_NC
IO17
SD2
SD3
CMD
SENSOR_VP
SENSOR_CAPP
SENSOR_VN
EN
IO34
IO35
CLK
SD0
SD1
IO5
IO18
IO23
VDD3P3_CPU
IO19
IO22
U0RXD
U0TXD
IO21
SENSOR_CAPN
XTAL_N_NC
XTAL_P_NC
CAP2_NC
CAP1_NC
NC_CLK
NC_SD0
NC_SD1
EN_SSL_R
LED_1
SEN_FRONT
TOF_SDA
TOF_SDI
RXD
TXD
SEN_LS
ADC1_CH2
NC1
NC2
NC3
NC4
ADC1_CH6
ADC1_CH0
ADC1_CH1
BUZZER
SUCTION_PWM
J1
BM06B-SURS-TF_LF__SN_
J2
BM06B-SURS-TF_LF__SN_
MP2
MP1
EN_MOSI
EN_MISO
EN_CLK
EN_SSL_L
EN_SSL_R
IC2
ICM-20689
EP
SDA/SDI
SCL/SCLK
NCS
NC_13
NC_12
NC_1
NC_2
NC_3
NC_4
NC_5
NC_6
NC_11
NC_10
NC_9
NC_8
VDD
NC_7
VDDIO
AD0/SDO
REGOUT
FSYNC
INT
C18
2.2uF
C7
22u
C21
10nF
C22
0.47uF

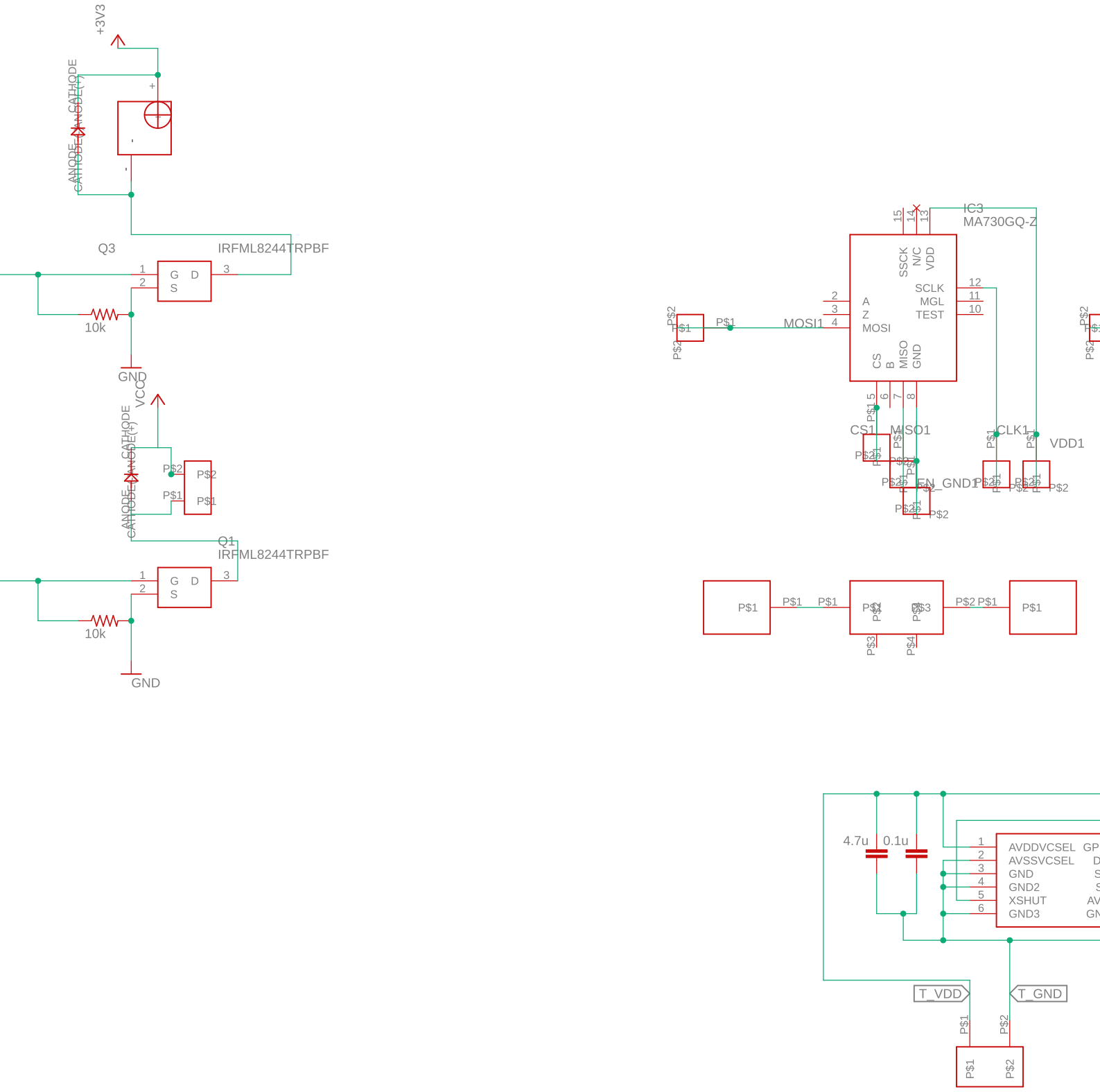
+3V3
CATHODE
ANODE
Q3
IRFML8244TRPBF
G D
S
10k
GND
VCC
P$2
P$1
Q1
IRFML8244TRPBF
IC3
MA730GQ-Z
SSCK
N/C
VDD
SCLK
MGL
TEST
A
Z
MOSI
CS
B
MISO
GND
MOSI1
CS1
MISO1
CLK1
VDD1
EN
GND1
T_VDD
T_GND
4.7u
0.1u
AVDDVCSEL
AVSSVCSEL
GND
GND2
XSHUT
GND3

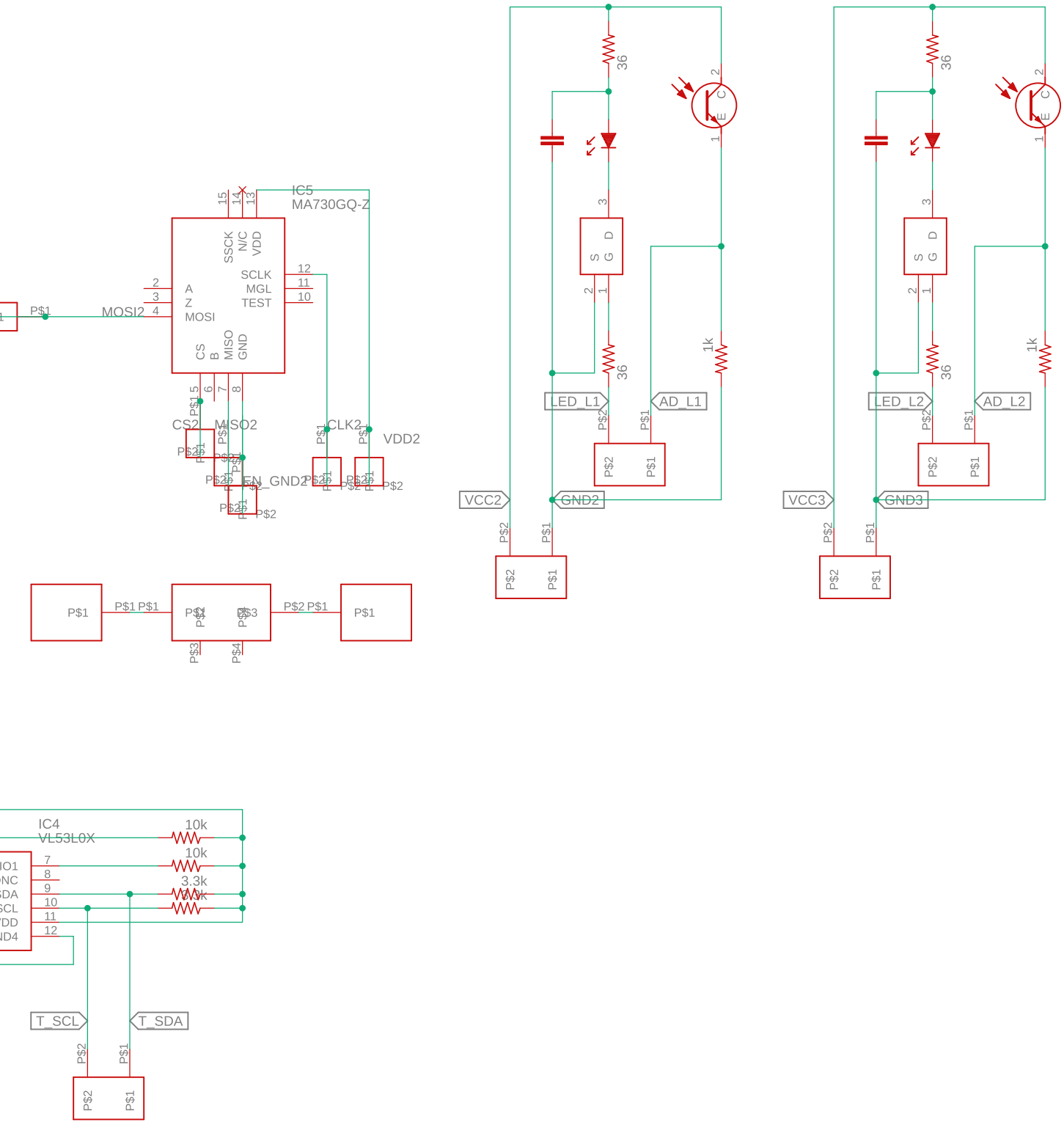
IC5
MA730GQ-Z
SSCK
N/C
VDD
SCLK
MGL
TEST
A
Z
MOSI
CS
B
MISO
GND
MOSI2
CS2
MISO2
CLK2
VDD2
EN_GND2
IC4
VL53L0X
10k
10k
3.3k
T_SCL
T_SDA
LED_L1
AD_L1
LED_L2
AD_L2
VCC2
GND2
VCC3
GND3
36
1k
S
G
D
E
C

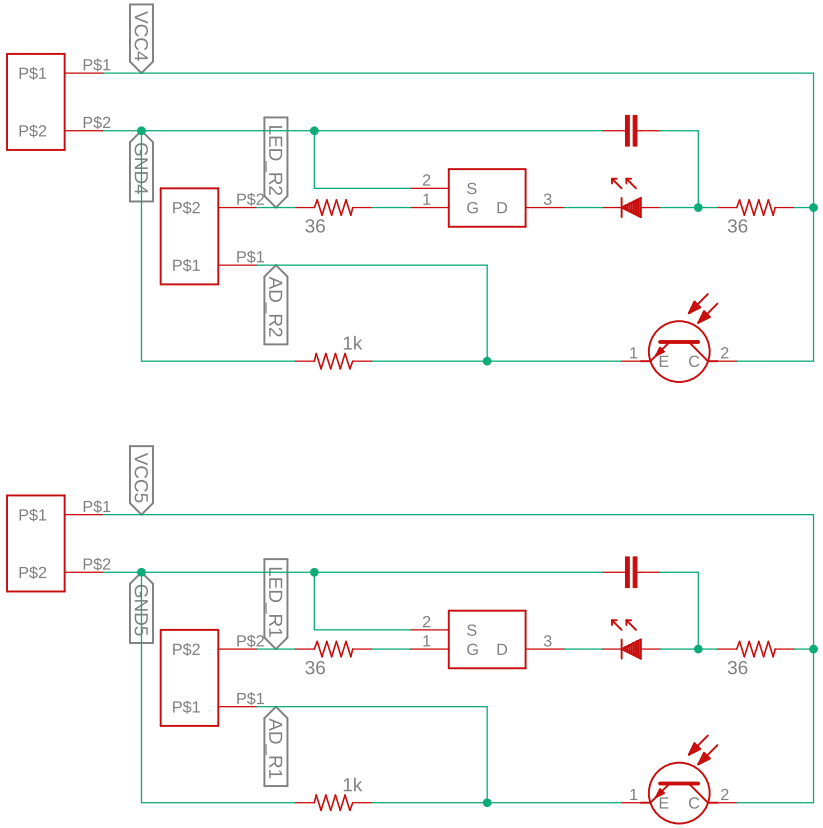
VCC4
P$1
P$2
GND4
LED_R2
P$2
P$1
AD_R2
36
1k
S
G D
2
1
3
36
1
E C
2
VCC5
P$1
P$2
GND5
LED_R1
P$2
P$1
AD_R1
36
1k
S
G D
2
1
3
36
1
E C
2